FANUC

GE Fanuc Automation

Computer Numerical Control Products

Series 16 / 160 / 18 / 180 – Model B

Maintenance Manual

GFZ-62445E/03 *January 1995*

PREFACE

Description of this manual

1. CRT/MDI display and operation

This chapter covers those items, displayed on the CRT, that are related to maintenance. A list of all supported operations is also provided at the end of this chapter.

2. Hardware

This chapter covers hardware–related items, including the hardware configuration, connection, and NC status indicated on printed circuit boards. A list of all units is also provided as well as an explanation of how to replace each unit.

3. Data input/output

This chapter describes the input/output of data, including programs, parameters, and tool compensation data, aswell as the input/output procedures for conversational data.

4. Interface between the NC and PMC

This chapter describes the PMC specifications, the system configuration, and the signals used by the PMC.

5. Digital servo

This chapter describes the servo tuning screen and how to adjust the reference position return position.

6. and 7. AC spindles

These chapters describe the spindle amplifier checkpoints, as well as the spindle tuning screen.

8. Trouble shooting

This chapter describes the procedures to be followed in the event of certain problems occurring, for example, if the power cannot be turned on or if manual operation cannot be performed. Countermeasures to be applied in the event of alarms being output are also described.

9. and 10. Spindle trouble shooting

These chapters explain the alarms related to spindles, as well as the corresponding countermeasures to be applied.

APPENDIX

The appendix consists of a list of all alarms, as well as a list of maintenance parts. The I/O Unit–MODEL A is also described.
This manual does not provide a parameter list. If necessary, refer to the separate PARAMETER DESCRIPTIONS (B–61810E) .
This manual describes all optional functions. Refer to the manual provided by the machine tool builder for details of any options with which the installed machine tool is provided.

Applicable models

This manual can be used with the following models. The abbreviated names may be used.

Pruduct name	Abbreviation	
FANUC Series 16–TB	16–TB	T series or T series (two–path control)*1
FANUC Series 160–TB	160–TB	
FANUC Series 16–MB	16–MB	M series or M series (two–path control)*1
FANUC Series 160–MB	160–MB	
FANUC Series 18–TB	18–TB	T series or T series (two–path control)*1
FANUC Series 180–TB	180–TB	
FANUC Series 18–MB	18–MB	M series
FANUC Series 180–MB	180–MB	

Note
Some function described in this manual may not be applied to some products.
For details, refer to the DESCRIPTIONS manual (B–62442E)

Related manuals

The table below lists manuals related to MODEL B of Series 16, Series 18, Series 160 and Series 180.
In the table, this manual is marked with an asterisk(*).

Table 1 Manuals Related

Manual name	Specification number	
DESCRIPTIONS	B–62442E	
CONNECTION MANUAL (HARDWARE)	B–62443E	
CONNECTION MANUAL (FUNCTION)	B–62443E–1	
OPERATOR'S MANUAL FOR LATHE	B–62444E	
OPERATOR'S MANUAL FOR MACHINING	B–62454E	
MAINTENANCE MANUAL	B–62445E	*
PARAMETER MANUAL	B–62450E	
PROGRAMMING MANUAL (Macro Compiler / Macro Executer)	B–61803E–1	
FAPT MACRO COMPILER PROGRAMMING MANUAL	B–66102E	
FANUC Super CAP T OPERATOR'S MANUAL	B–62444E–1	
FANUC Super CAP M OPERATOR'S MANUAL	B–62154E	
FANUC Super CAP M PROGRAMMING MANUAL	B–62153E	

Table 1 Manuals Related

Manual name	Specification number	
CONVERSATIONAL AUTOMATIC PROGRAMMING FUNCTION I FOR LATHE (Series 18–TB) OPERATOR'S MANUAL	B–61804E–1	
CONVERSATIONAL AUTOMATIC PROGRAMMING FUNCTION II FOR LATHE (Series 15–MODEL B, Series–16 CAP II) OPERATOR'S MANUAL	B–61804E–2	

For specifications and maintenance of FANUC CONTROL MOTOR α series, refer to the following manuals :

Document name	Document number	Major contents	Major usage	
FANUC AC SERVO MOTOR α series DESCRIPTIONS	B–65142E	● Specification ● Characteristics ● External dimensions ● Connections	● Selection of motor ● Connection of motor	
FANUC AC SPINDLE MOTOR α series DESCRIPTIONS	B–65152E	● Specification ● Characteristics ● External dimensions ● Connections		
FANUC CONTROL MOTOR AMPLIFIER α series DESCRIPTIONS	B–65162E	● Specifications and functions ● Installation ● External dimensions and maintenance area ● Connections	● Selection of amplifier ● Connection of amplifier	
FANUC CONTROL MOTOR α series MAINTENANCE MANUAL	B–65165E	● Start up procedure ● Troubleshooting ● Maintenance of motor	● Start up the system (Hardware) ● Troubleshooting ● Maintenance of motor	
FANUC AC SERVO MOTOR α series PARAMETER MANUAL	B–65150E	● Initial setting ● Setting parameters ● Description of parameters	● Start up the system (Software) ● Turning the system (Parameters)	
FANUC AC SPINDLE MOTOR α series PARAMETER MANUAL	B–65160E	● Initial setting ● Setting parameters ● Description of parameters		

Table of Contents

1. DISPLAY AND OPERATION OF CRT/MDI 1

1.1 FUNCTION KEYS AND SOFT KEYS 2
1.1.1 Soft Keys 2
1.2 SCREEN DISPLAYED IMMEDIATELY AFTER POWER IS TURNED ON 22
1.2.1 Slot Status Display 22
1.2.2 Setting Module Screen 23
1.2.3 Configuration Display of Software 23
1.3 SYSTEM CONFIGURATION SCREEN 24
1.3.1 Display Method 24
1.3.2 Configuration of PCBs 24
1.3.3 Software Configuration Screen 26
1.3.4 Module Configuration Screen 26
1.4 ALARM HISTORY SCREEN 27
1.4.1 General 27
1.4.2 Screen Display 27
1.4.3 Clearing Alarm History 27
1.4.4 Alarm Display 27
1.5 EXTERNAL OPERATOR MESSAGES RECORD 28
1.5.1 Screen Display 28
1.5.2 Deletion of External Operator Messages Record 28
1.5.3 Parameter 29
1.5.4 Notes 29
1.6 OPERATION HISTORY 30
1.6.1 Parameter Setting 30
1.6.2 Screen Display 31
1.6.3 Setting the Input Signal or Output Signal to be Recorded in the Operation History 35
1.6.4 Inputting and Outputting the Operation History Data 44
1.6.5 Notes 50
1.7 HELP FUNCTION 51
1.7.1 General 51
1.7.2 Display Method 51
1.8 DISPLAYING DIAGNOSTIC PAGE 54
1.8.1 Displaying Diagnostic Page 54
1.8.2 Contents Displayed 54
1.9 NC STATE DISPLAY 68
1.10 WAVE FORM DIAGNOSTIC FUNCTION 69
1.10.1 Setting Parameters 69
1.10.2 Waveform Diagnostic Parameter Screen 70
1.10.3 Graphic of Wave Diagnosis Data 73
1.10.4 Data Sampling for Storage Type Waveform Diagnosis 75
1.10.5 Outputting Waveform Diagnosis Data (Storage Type) 77
1.11 OPERATING MONITOR 80
1.11.1 Display Method 80
1.12 LIST OF OPERATIONS 82
1.13 WARNING SCREEN DISPLAYED WHEN AN OPTION IS CHANGED 86
1.14 WARNING SCREEN DISPLAYED WHEN SYSTEM SOFTWARE IS REPLACED (SYSTEM LABEL CHECK ERROR) 88

2. HARDWARE 89

2.1 STRUCTURE 90

2.2 GENERAL OF HARDWARE 91
2.2.1 Series 16 91
2.3 TOTAL CONNECTION DIAGRAM 92
2.3.1 16–TB/MB, 160–TB/MB (MAIN–A SPEC.) 93
2.3.2 16–TB/MB, 160–TB/MB, 18–TB/MB, 180–TB/MB (MAIN–B SPEC.) 95
2.3.3 18–TB/MB 97
2.4 INTER–MACHINE CONNECTION 99
2.4.1 CRT/MDI Unit 99
2.4.2 Reader/Puncher Interface 101
2.4.3 Manual Pulse Generator 102
2.4.4 I/O LINK 103
2.4.5 Servo Interface 105
2.4.6 Connections by Type of Detectors 109
2.4.7 Combining Serial Spindle and Analog Spindle 112
2.4.8 Connection to α serial Spindle Amplifier 113
2.4.9 Connection to Serial Spindle Amplifier 114
2.4.10 Connection to Analog Spindle Amplifier 115
2.4.11 Remote Buffer Interface 115
2.4.12 High–speed DI Signal Interface 117
2.4.13 Analog Signal Interface 119
2.4.14 Environmental Requirement 120
2.4.15 Power Capacity 120
2.4.16 Action Against Noise 120
2.5 LED DISPLAY AND MODULE CONFIGURATION OF PCB 126
2.5.1 Power Supply Unit 126
2.5.2 Main CPU Board 130
2.5.3 Option 1 Board 140
2.5.4 Option 2 Board 142
2.5.5 Option 3 Board 148
2.5.6 Loader Control Boad 151
2.5.7 I/O Card (Sink Type Output) 154
2.5.8 I/O Card (Source Type Output) 154
2.5.9 I/O Cards with Power Supply (Power C) (Sink Type Output) 155
2.5.10 I/O Cards with Power Supply (Power C) (Source Type Output) 157
2.5.11 Background Graphic Board 159
2.6 LIST OF THE PCBS AND UNITS 161
2.6.1 Control Unit Rack 161
2.6.2 Power Unit 162
2.6.3 Control Unit P.C.B. 162
2.6.4 Modules 164
2.6.5 CRT/MDI Unit 166
2.7 HOW TO REPLACE THE MODULES 172
2.7.1 Removing 172
2.7.2 Insertion 172
2.8 HOW TO REPLACE THE BATTERIES 173
2.8.1 Replace the Battery for Memory Back Up 173
2.8.2 Replacing Batteries for Separate Absolute Pulse Coder 174
2.9 HOW TO REPLACE FAN MOTOR 175
2.10 FUSE REPLACEMENT IN POWER SUPPLY UNIT 176
2.11 MAINTENANCE OF HEAT PIPE TYPE HEAT EXCHANGER 177

2.12 HOW TO REPLACE THE COLOR LIQUID CRYSTAL DISPLAY 180
2.13 REPLACING THE LCD FUSE 181
2.14 REPLACING THE LCD BAKLIGHT 182

3. INPUT AND OUTPUT OF DATA 183

3.1 SETTING PARAMETERS FOR INPUT/OUTPUT 184
3.2 INPUTTING/ OUTPUTTING DATA 186
3.2.1 Confirming the Parameters Required for Data Output 186
3.2.2 Outputting CNC Parameters 187
3.2.3 Outputting PMC Parameters 188
3.2.4 Outputting Pitch Error Compensation Amount 188
3.2.5 Outputting Custom Macro Variable Values 189
3.2.6 Outputting Tool Compensation Amount 189
3.2.7 Outputting Part Program 190
3.2.8 Inputting CNC Parameters 190
3.2.9 Inputting PMC Parameters 192
3.2.10 Inputting Pitch Error Compensation Amount 192
3.2.11 Inputting Custom Macro Variable Values 193
3.2.12 Inputting Tool Compensation Amount 193
3.2.13 Inputting Part Programs 194
3.3 INPUT/OUTPUT SUPER CAP DATA 195
3.3.1 Input/Output of Conversational Data in a Lump(Super CAP M) 195
3.3.2 Input and Output of Each File 197
3.3.3 Output of CAP Data (Super CAP T) 197
3.3.4 Inputting CAP Data (Super CAP T) 202
3.4 INPUTTING/OUTPUTT ING CAP–II DATA(16–T) 205
3.5 DUMP/RESTORE OF CAP–II DATA (16 – T) 207
3.5.1 Kind of Data in Sub Memory 207
3.5.2 Operation 207
3.6 CLEARING CAP–II DATA (16 – T) 208
3.6.1 Deleting File Name and Files 208
3.6.2 Clearing CAP–II Memory 209

4. INTERFACE BETWEEN NC AND PMC 210

4.1 GENERAL OF INTERFACE 211
4.2 SPECIFICATION OF PMC 212
4.2.1 Specification 212
4.2.2 Address 213
4.2.3 Built–in Debug Function 214
4.2.4 System Reserve Area of Internal Relay 214
4.2.5 Execution Period of PMC 217
4.3 PMC SCREEN 218
4.3.1 Display Method 218
4.3.2 PMCLAD Screen 219
4.3.3 PMCDGN Screen 223
4.3.4 Memory Display (M.SRCH) 227
4.3.5 PMCRAM Screen 231
4.4 LIST OF SIGNALS BY EACH MODE 237
4.5 SIGNAL AND SYMBOL CORRESPONDENCE TABLE 239

5. DIGITAL SERVO 247

5.1 INITIAL SETTING SERVO PARAMETERS 248
5.2 SERVO TUNING SCREEN 253
5.2.1 Parameter Setting 253
5.2.2 Displaying Servo Tuning Screen 253
5.3 ADJUSTING REFERENCE POSITION (DOG METHOD) 256
5.3.1 General 256
5.4 DOGLESS REFERENCE POSITION SETTING 258
5.4.1 General 258
5.4.2 Operation 258
5.4.3 Associated Parameters 259

6. AC SPINDLE (SERIAL INTERFACE) 260

6.1 GENERAL OF SPINDLE CONTROL (SERIAL* INTERFACE) 261
6.1.1 Method A of Gear Change for Machining Center 262
6.1.2 Method B of Gear Change for Machining Center(PRM 3705#2=1) 262
6.1.3 For Lathe 262
6.2 TABLE OF TEST POINTS 263
6.2.1 Printed Circuit Board (A16B–2201–0440) 263
6.2.2 Signal Waveform At Test Points 265
6.3 CONFIRMING POWER SUPPLY (SERIAL INTERFACE) 266
6.3.1 Power Supply 266
6.3.2 Test Points 266
6.4 SPINDLE SETTING AND TUNING SCREEN 269
6.4.1 Display Method 269
6.4.2 Spindle Setting Screen 269
6.4.3 Spindle Tuning Screen 270
6.4.4 Spindle Monitor Screen 272
6.4.5 Correspondence Between Operation Mode and Parameters on Spindle Tuning Screen 274
6.5 AUTOMATIC SETTING OF STANDARD PARAMETER 277

7. AC SPINDLE (ANALOG INTERFACE) 278

7.1 GENERAL OF SPINDLE CONTROL (ANALOG INTERFACE) 279
7.1.1 Block Diagram 279
7.1.2 Calculation of S Analog Voltage and Associated Parameters 280
7.1.3 Tuning S Analog Voltage (D/A Converter) 282
7.2 TABLE OF TEST POINTS 284
7.2.1 Model 1S to 3S (Amp. Specification : A06B–6059–H00x) 284
7.2.2 Models 6S to 26S (Amp. specification: A06B–6059–H2xx) 285
7.2.3 Test Points Signal Waveform 286
7.3 SETTING PARAMETERS (DIGITAL AC SPINDLE) 287
7.4 SETTING STANDARD PARAMETERS 288
7.5 LIST OF PARAMETER 289
7.6 TUNING AFTER REPLACING PCB (S SERIES AC SPINDLE) 292

8. TROUBLESHOOTING 294

8.1 CORRECTIVE ACTION FOR FAILURES 296
8.1.1 Investigating the Conditions under which Failure Occurred 296

8.2 POWER CANNOT BE TURNED ON 298
8.3 NO MANUAL OPERATION NOR AUTOMATIC OPERATION CAN BE EXECUTED 301
8.4 JOG OPERATION CANNOT BE DONE 305
8.5 HANDLE OPERATION CANNOT BE DONE 309
8.6 AUTOMATIC OPERATION CANNOT BE DONE 312
8.7 CYCLE START LED SIGNAL HAS TURNED OFF 321
8.8 NOTHING IS DISPLAYED ON CRT 323
8.9 ALARM 85 TO 87 (READER/PUNCHER INTERFACE ALARM) 326
8.10 REFERENCE POSITION DEVIATES 335
8.11 ALARM 90 (REFERENCE POSITION RETURN IS ABNORMAL) 336
8.12 ALARM 300 (REQUEST FOR REFERENCE POSITION RETURN) 338
8.13 ALARM 301 TO 305 (ABSOLUTE PULSE CODER IS FAULTY) 339
8.14 ALARM 306 TO 308 (ABSOLUTE PULSE CODER BATTERY IS LOW) 342
8.15 ALARM 350 (SERIAL PULSE CODER IS ABNORMAL) 343
8.16 ALARM 351 (SERIAL PULSE CODER COMMUNICATION IS ABNORMAL) 344
8.17 ALARM 400 (OVERLOAD) 345
8.18 ALARM 401 (*DRDY SIGNAL TURNED OFF) 347
8.19 ALARM 404 AND 405 (*DRDY SIGNAL TURNED ON) 349
8.20 ALARM 410 (EXCESSIVE POSITION ERROR AMOUNT DURING STOP) 350
8.21 ALRAM 411 (EXECESSIVE POSITION ERROR DURING MOVE) 351
8.22 ALARM 414 (DIGITAL SERVO SYSTEM IS ABNORMAL) 353
8.23 ALRAM 416 (DISCONNECTION ALARM) 365
8.24 ALARM 417 (DIGITAL SERVO SYSTEM IS ABNORMAL) 366
8.25 ALARM 700 (OVERHEAT AT CONTROL SIDE) 367
8.26 ALARM 704 (SPINDLE SPEED FLUCTUATION DETECTION ALARM) 368
8.27 ALARM 749 (SERIAL SPINDLE COMMUNICATION ERROR) 369
8.28 ALARM 750 (SPINDLE SERIAL LINK CANNOT BE STARTED) 372
8.29 ALARM 751,761 (SPINDLE ALARM) 377
8.30 ALARM 900 (ROM PARITY ERROR) 378
8.31 ALARM 910 TO 915 (SRAM PARITY) 381
8.32 ALARM 916 (DRAM PARITY ERROR) 384
8.33 ALARM 920 TO 923 (WATCH DOG OR RAM PARITY) 386
8.34 ALARM 924 (SERVO MODULE MOUNTING ERROR) 390
8.35 ALARM 930 (CPU ERROR) 391
8.36 ALARM 950 (PMC SYSTEM ALARM) 392
8.37 ALARM 951 (PMC–RCWATCH DOG ALARM) 394
8.38 ALARM 970 (NMI ALARM IN PMC CONTROL MODULE) 395
8.39 ALARM 971 (NMI ALARM IN SLC) 397
8.40 ALARM 972 (NMI ALARM) 398
8.41 ALARM 973 (NMI ALARM BY UNKNOWN CAUSE) 399

9. TROUBLESHOOTING (SERIAL INTERFACE SPINDLE) 400

9.1 LIST OF SERIAL INTERFACE SPINDLE AMPLIFIER ALARMS 401
9.2 TROUBLESHOOTING FOR EACH ALARM 404

10. TROUBLESHOOTING (ANALOG INTERFACE SPINDLE) 411

10.1 AL–01 (MOTOR OVERHEAT) 412

10.2 AL–02 (EXCESSIVE DEVIATION OF SPEED) 413
10.3 AL–06, 07 (OVER SPEED) 414
10.4 AL–09 (UNIT OVERHEAT / 6S TO 26S ONLY) 415
10.5 AL–10 (LOW INPUT VOLTAGE) 416
10.6 AL–11 (DC LINK EXCESSIVE VOLTAGE) 417
10.7 AL–12 (DC LINK EXCESSIVE CURRENT) 418
10.8 ABNORMAL SOUND AND VIBRATION DURING ROTATION 419
10.9 NO ROTATION OR INCORRECT SPEED 420
10.10 CONFIRMATION OF TRANSISTOR MODULE 421

APPENDIXES

A. I/O UNIT MODEL A 425

A.1 SYSTEM CONFIGURATION 426
A.2 HARDWARE CONFIGURATION 426
A.3 LED INDICATION 427
A.4 FUSES 428
A.5 REMOVING A PRINTED CIRCUIT BOARD 429

B. ALARM LIST 431

B.1 LIST OF ALARM CODES 432
B.2 LIST OF ALARMS (PMC) 456
B.3 SPINDLE ALARMS (SERIAL SPINDLE) 463
B.4 SPINDLE ALARMS (ANALOG INTERFACE) (S SEIRES AC SPINDLE) 468

C. LIST OF MAINTENANCE PARTS 471

C.1 MAINTENANCE PARTS 472

D. BOOT SYSTEM 487

D.1 OVERVIEW 488
D.1.1 Starting the Boot System 488
D.1.2 System Files and User Files 489
D.1.3 Boot Slot Configuration Screen 489
D.2 SCREEN CONFIGURATION AND OPERATING PROCEDURE 490
D.2.1 System Data Loading Screen 491
D.2.2 System Data Check Screen 493
D.2.3 System Data Delete Screen 495
D.2.4 System Data Save Screen 496
D.2.5 SRAM Data Backup Screen 498
D.2.6 Memory Card File Delete Screen 501
D.2.7 Memory Card Format Function 502
D.2.8 Load Basic System Function 503
D.3 ERROR MESSAGES AND REQUIRED ACTIONS 504

E. NOTATION OF MDI KEYS 506

1 DISPLAY AND OPERATION OF CRT/MDI

This chapter describes how to display various screens by the function keys. The screens used for maintenance are respectively displayed.

1.1 FUNCTION KEYS AND SOFT KEYS 2
1.2 SCREEN DISPLAYED IMMEDIATELY AFTER POWER IS TURNED ON 22
1.3 SYSTEM CONFIGURATION SCREEN 24
1.4 ALARM HISTORY SCREEN 27
1.5 EXTERNAL OPERATOR MESSAGES RECORD 28
1.6 OPERATION HISTORY 30
1.7 HELP FUNCTION 51
1.8 DISPLAYING DIAGNOSTIC PAGE 54
1.9 NC STATE DISPLAY 68
1.10 WAVE FORM DIAGNOSTIC FUNCTION 69
1.11 OPERATING MONITOR 80
1.12 LIST OF OPERATIONS 82
1.13 WARNING SCREEN DISPLAYED WHEN AN OPTION IS CHANGED 86
1.14 WARNING SCREEN DISPLAYED WHEN SYSTEM SOFTWARE IS REPLACED (SYSTEM LABEL CHECK ERROR) 88

1.1 FUNCTION KEYS AND SOFT KEYS

Operations and soft key display staturs for each function key are described below:

1.1.1 Soft Keys

To display a more detailed screen, press a function key followed by a soft key. Soft keys are also used for actual operations.
The following illustrates how soft key displays are changed by pressing each function key.

The symbols in the following figures mean as shown below :

	:	Indicates screens
	:	Indicates a screen that can be displayed by pressing a function key(*1)
[ ]	:	Indicates a soft key(*2)
( )	:	Indicates input from the MDI panel.
[__]	:	Indicates a soft key displayed in green (or highlighted).
	:	Indicates the continuous menu key (rightmost soft key)(*3).

*1 Press function keys to switch between screens that are used frequently.

*2 Some soft keys are not displayed depending on the option configuration.

*3 In some cases, the continuous menu key is omitted when the 14″ CRT display or 8.4″/9.5″/LCD is used.

POSITION SCREEN Soft key transition triggered by the function key [POS]

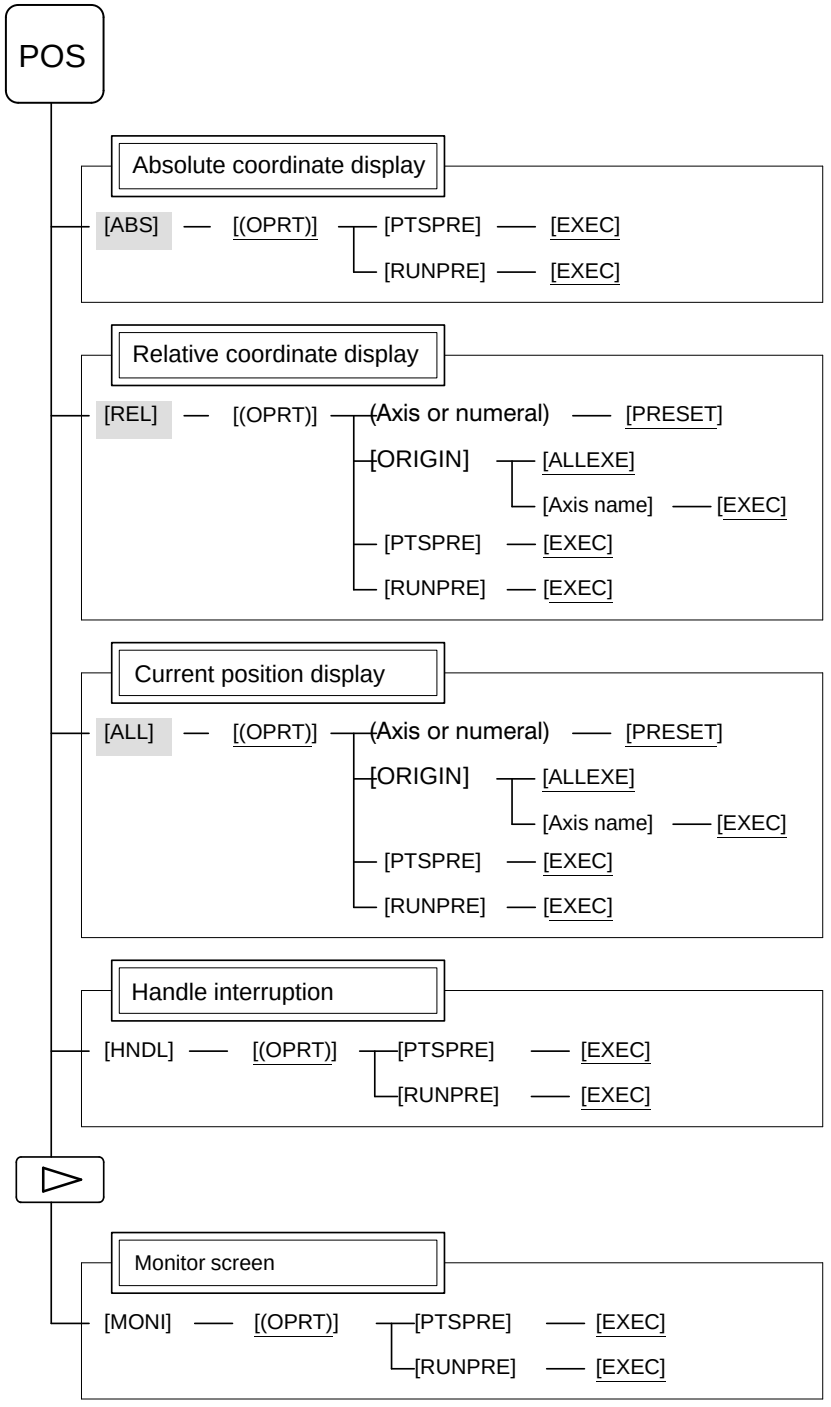

PROGRAM SCREEN

Soft key transition triggered by the function key in the MEM mode

PROG

1/2

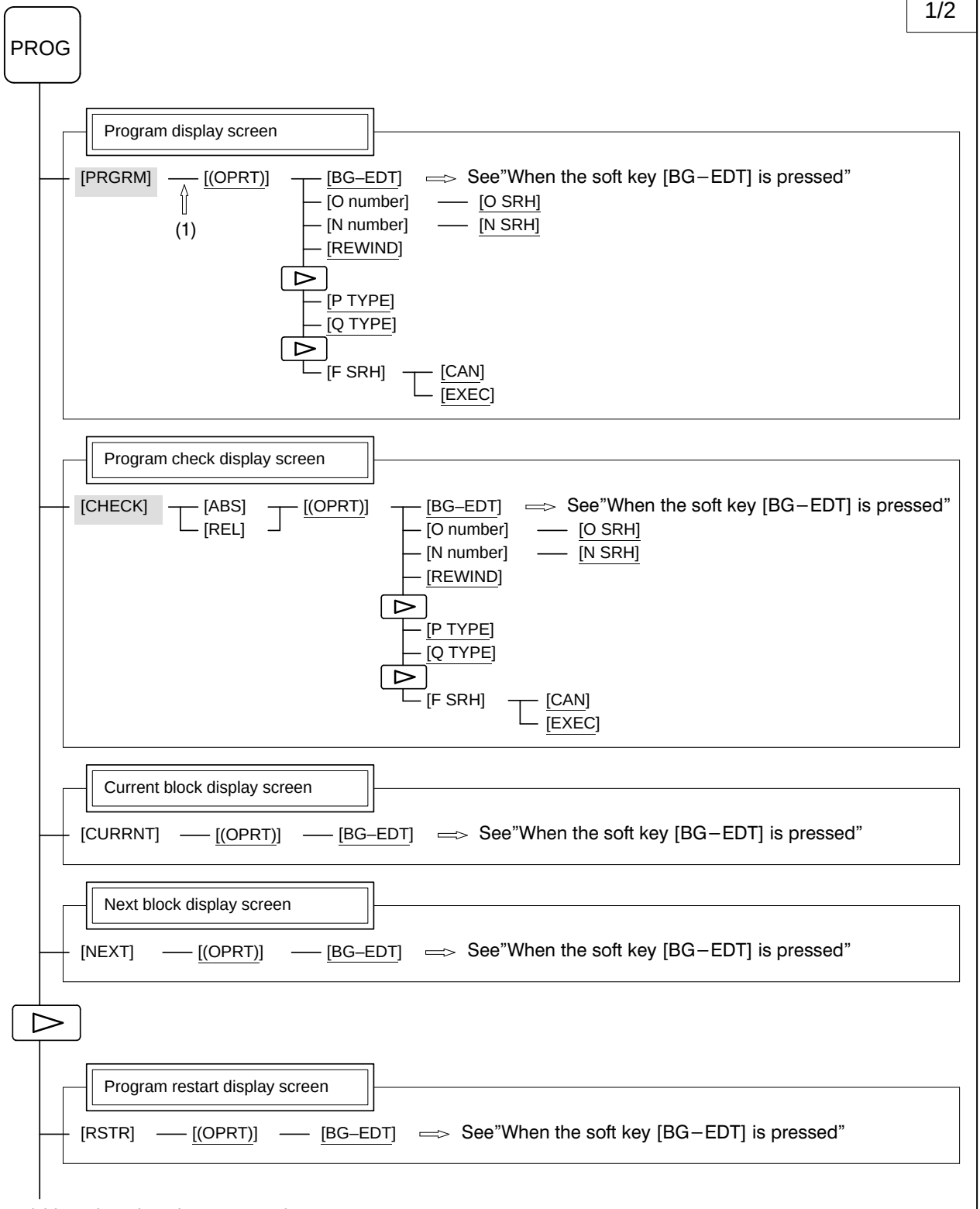

(2)(Continued on the next page)

2/2

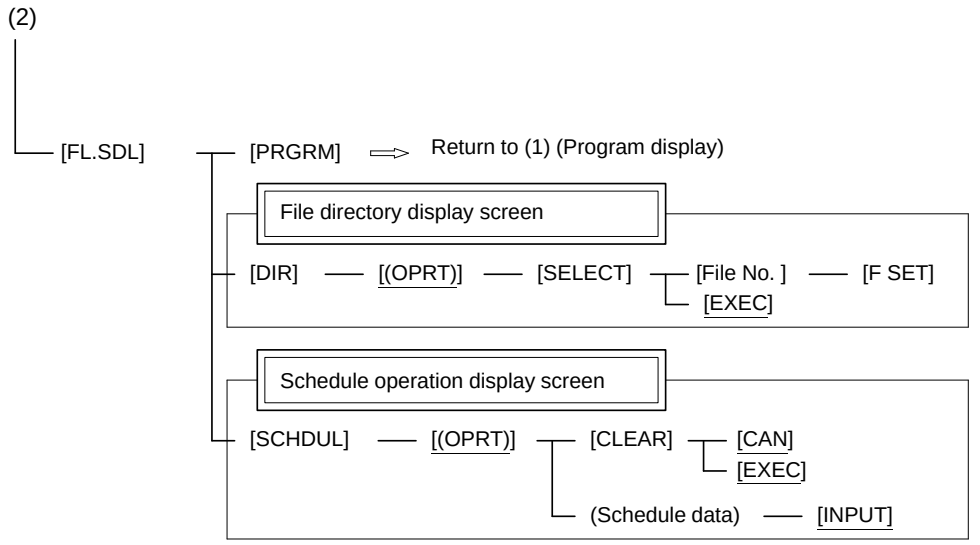
(2)
[FL.SDL]
[PRGRM]
Return to (1) (Program display)
File directory display screen
[DIR]
[(OPRT)]
[SELECT]
[File No.]
[F SET]
[EXEC]
Schedule operation display screen
[SCHDUL]
[(OPRT)]
[CLEAR]
[CAN]
[EXEC]
(Schedule data)
[INPUT]

PROGRAM SCREEN

Soft key transition triggered by the function key in the EDIT mode

PROG

1/2

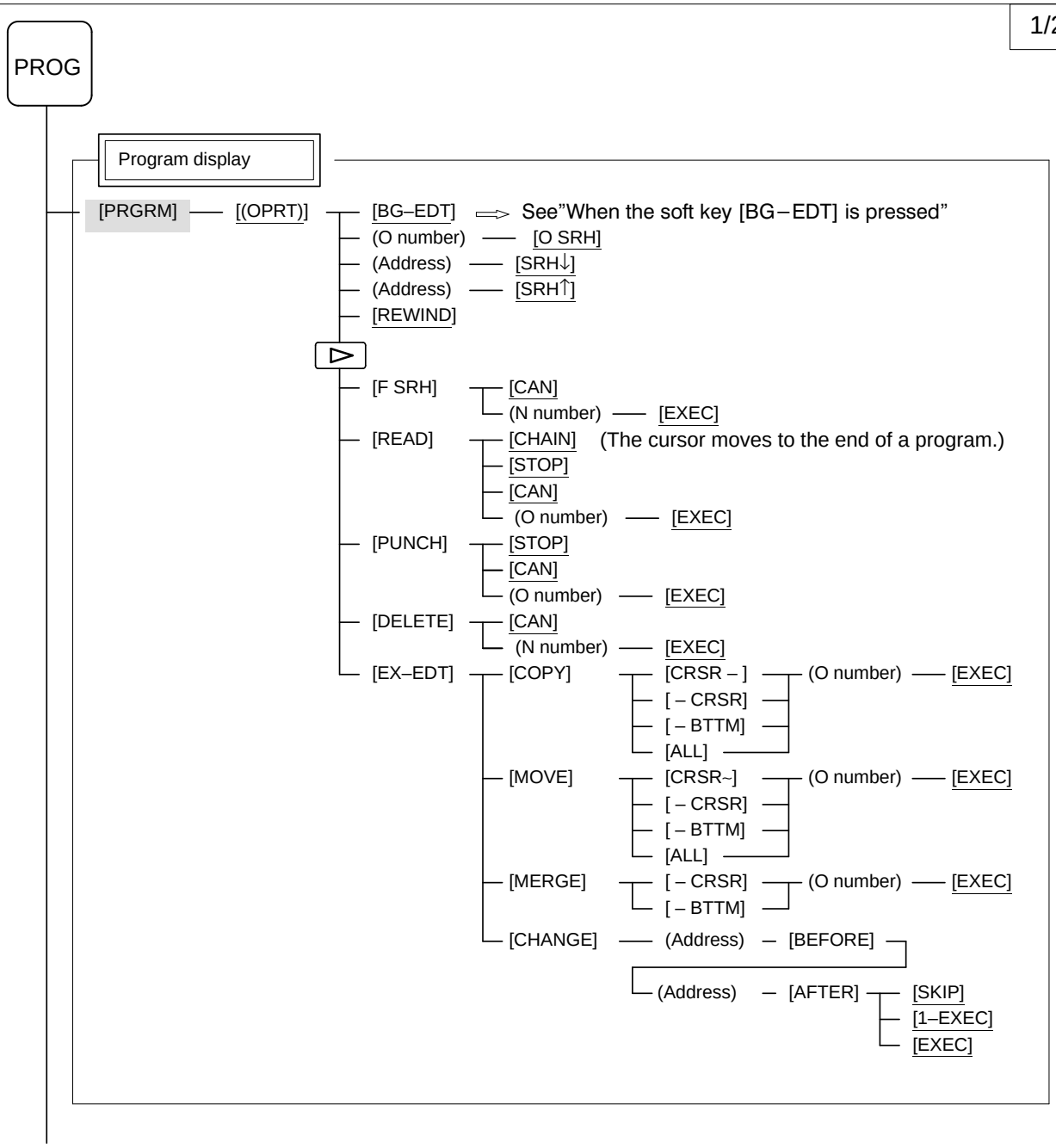

(1)(Continued on the next page)

2/2

(1)

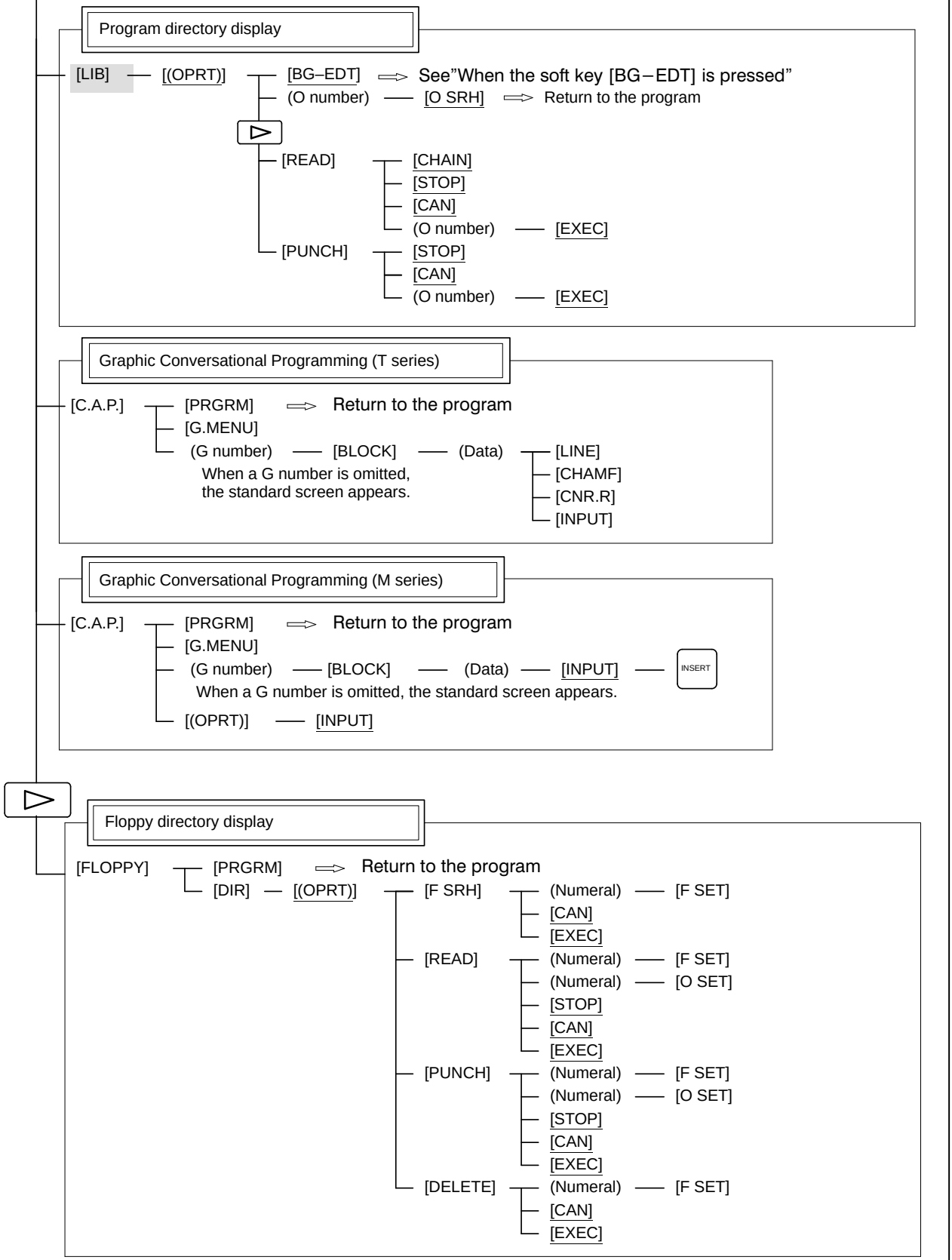
Program directory display
[LIB]
[(OPRT)]
[BG–EDT]
See"When the soft key [BG−EDT] is pressed"
(O number)
[O SRH]
Return to the program
[READ]
[CHAIN]
[STOP]
[CAN]
(O number)
[EXEC]
[PUNCH]
[STOP]
[CAN]
(O number)
[EXEC]
Graphic Conversational Programming (T series)
[C.A.P.]
[PRGRM]
Return to the program
[G.MENU]
(G number)
[BLOCK]
(Data)
[LINE]
[CHAMF]
[CNR.R]
[INPUT]
When a G number is omitted, the standard screen appears.
Graphic Conversational Programming (M series)
[C.A.P.]
[PRGRM]
Return to the program
[G.MENU]
(G number)
[BLOCK]
(Data)
[INPUT]
INSERT
When a G number is omitted, the standard screen appears.
[(OPRT)]
[INPUT]
Floppy directory display
[FLOPPY]
[PRGRM]
Return to the program
[DIR]
[(OPRT)]
[F SRH]
(Numeral)
[F SET]
[CAN]
[EXEC]
[READ]
(Numeral)
[F SET]
(Numeral)
[O SET]
[STOP]
[CAN]
[EXEC]
[PUNCH]
(Numeral)
[F SET]
(Numeral)
[O SET]
[STOP]
[CAN]
[EXEC]
[DELETE]
(Numeral)
[F SET]
[CAN]
[EXEC]

PROGRAM SCREEN

Soft key transition triggered by the function key in the MDI mode

PROG

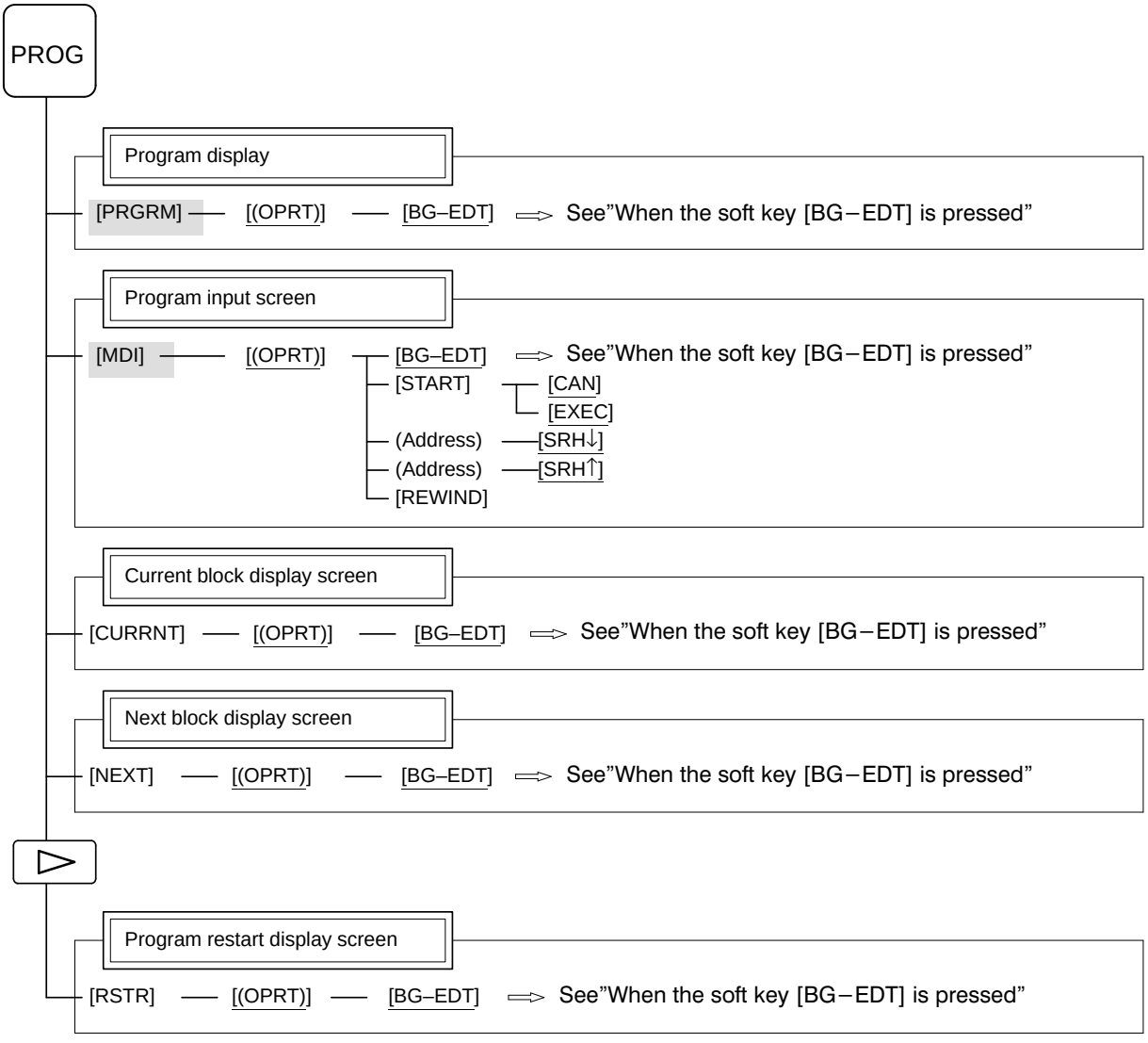

PROGRAM SCREEN

Soft key transition triggered by the function key in the HNDL, JOG, or REF mode

PROG

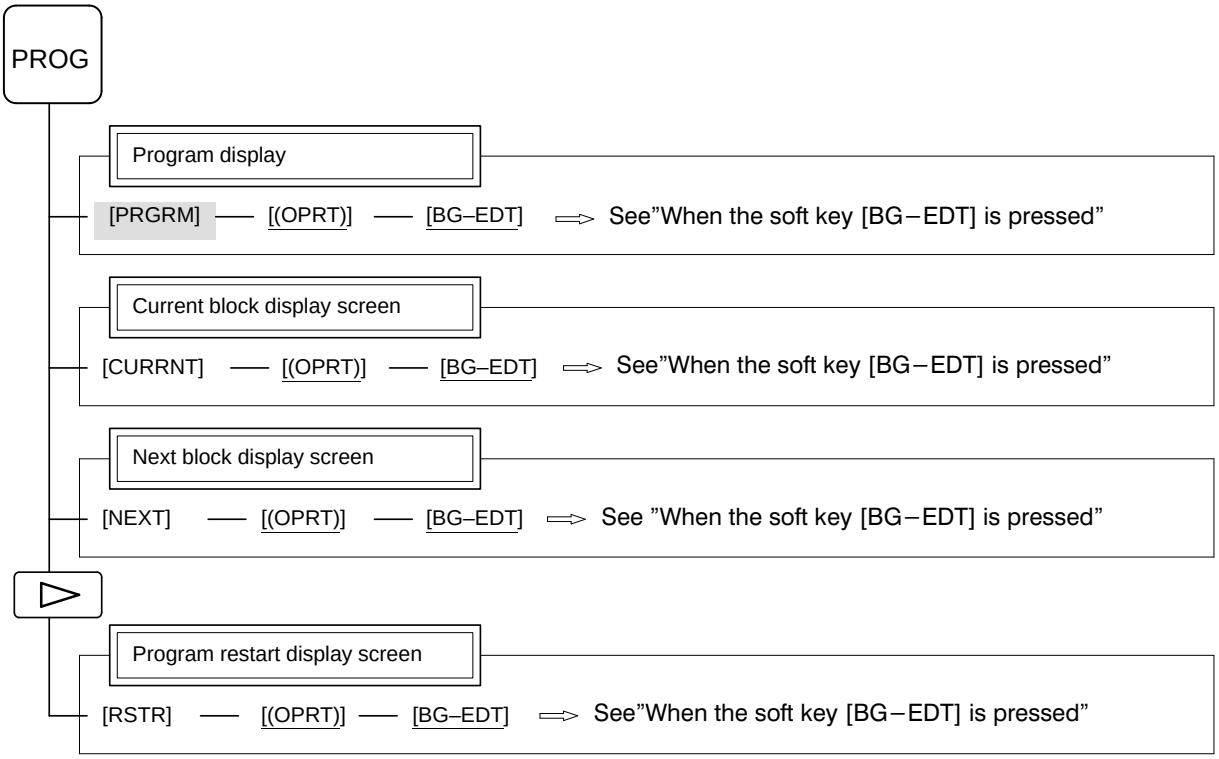

PROGRAM SCREEN

Soft key transition triggered by the function key in the TJOG or THDL mode

PROG

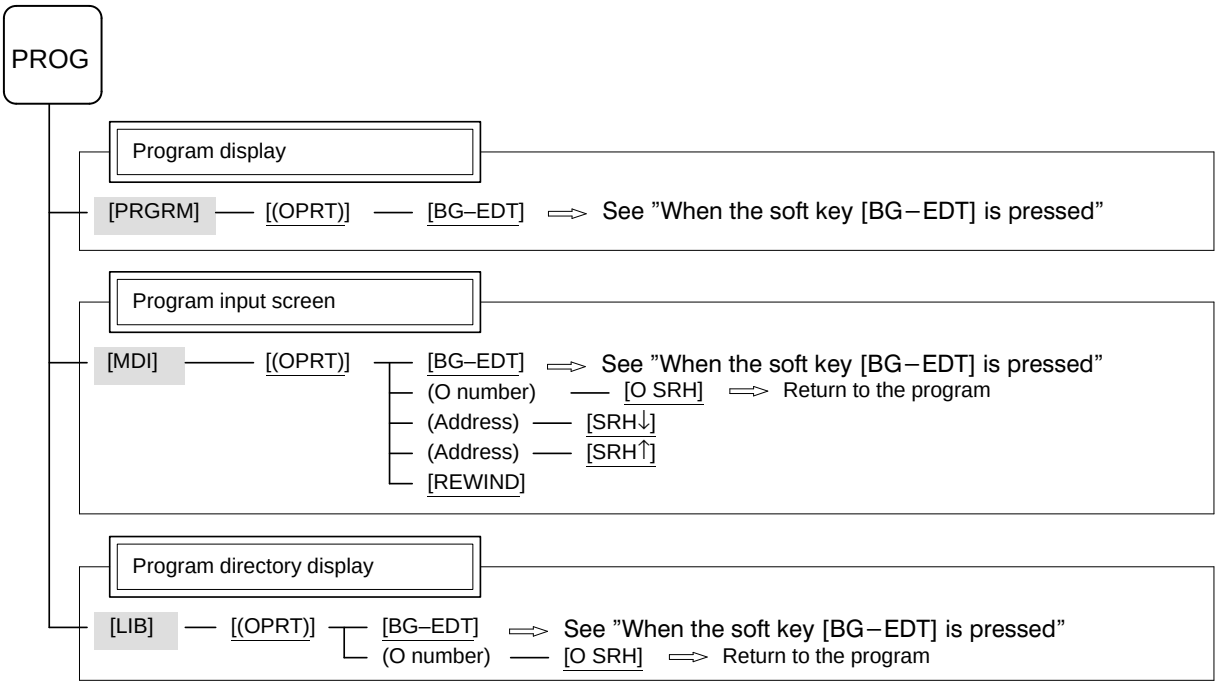

PROGRAM SCREEN

Soft key transition triggered by the function key PROG
(When the soft key [BG–EDT] is pressed in all modes)

1/2

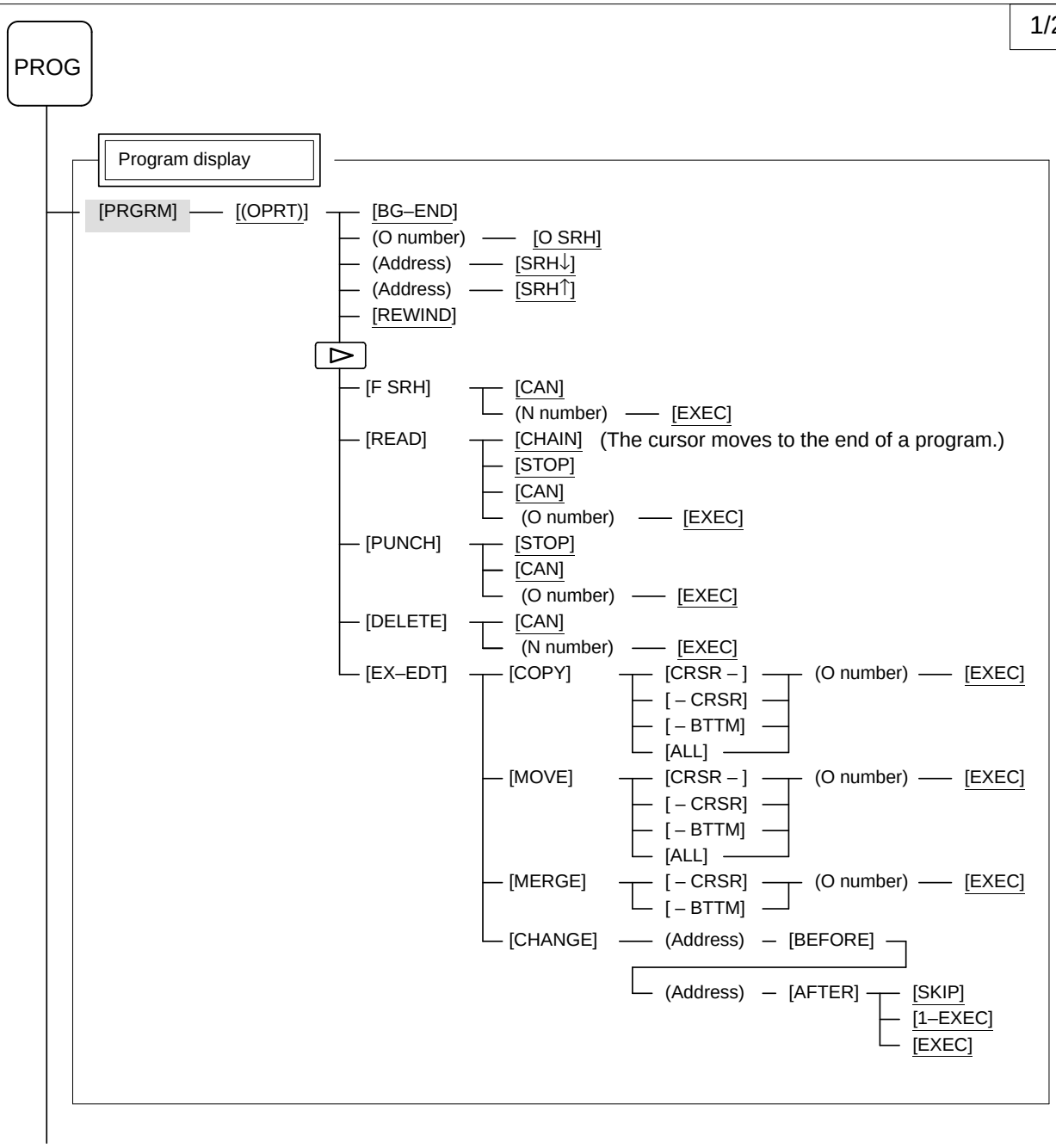

(1)(Continued on the next page)

2/2

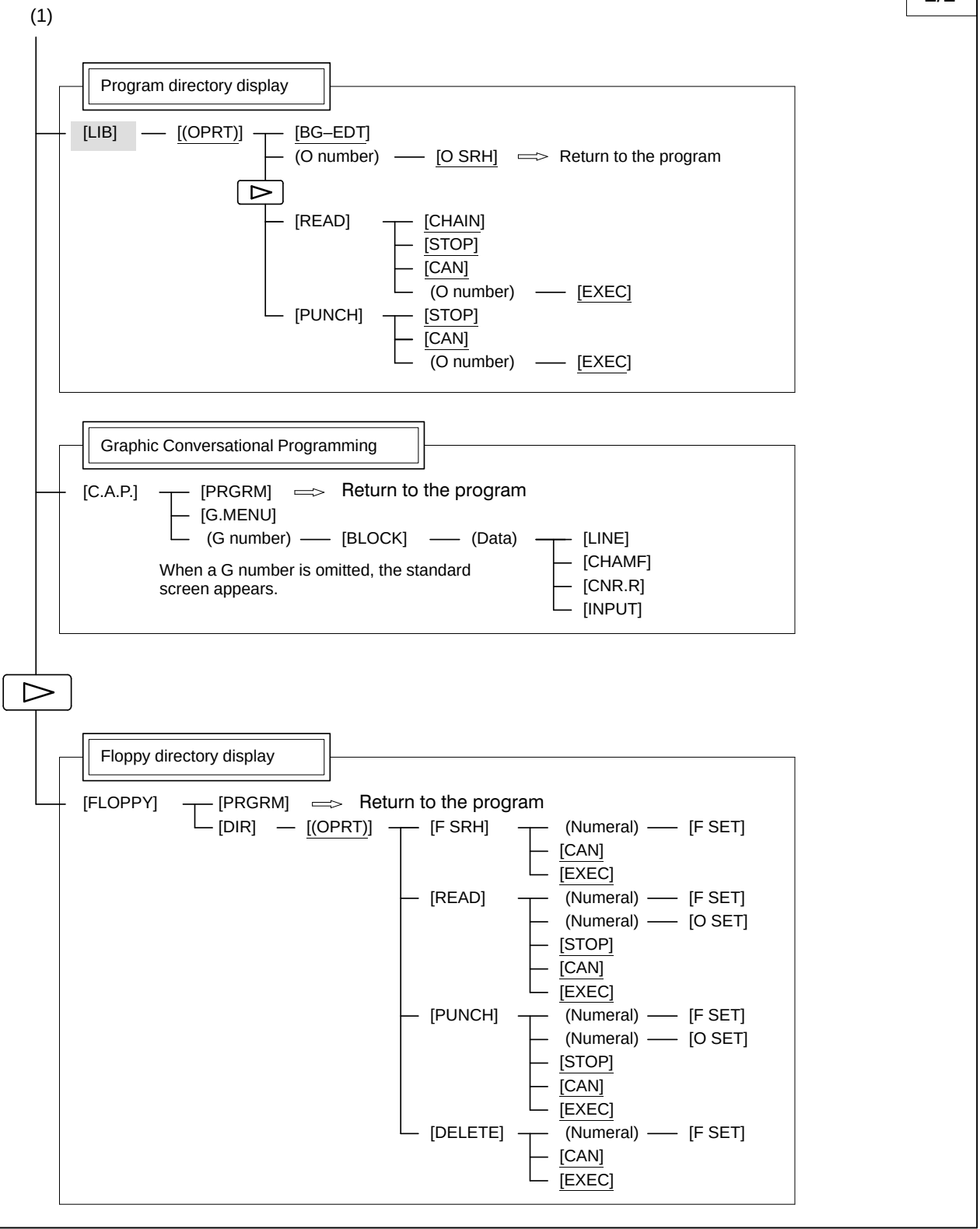
(1)
Program directory display
[LIB]
[(OPRT)]
[BG–EDT]
(O number)
[O SRH]
Return to the program
[READ]
[CHAIN]
[STOP]
[CAN]
(O number)
[EXEC]
[PUNCH]
[STOP]
[CAN]
(O number)
[EXEC]
Graphic Conversational Programming
[C.A.P.]
[PRGRM]
Return to the program
[G.MENU]
(G number)
[BLOCK]
(Data)
[LINE]
[CHAMF]
[CNR.R]
[INPUT]
When a G number is omitted, the standard screen appears.
Floppy directory display
[FLOPPY]
[PRGRM]
Return to the program
[DIR]
[(OPRT)]
[F SRH]
(Numeral)
[F SET]
[CAN]
[EXEC]
[READ]
(Numeral)
[F SET]
(Numeral)
[O SET]
[STOP]
[CAN]
[EXEC]
[PUNCH]
(Numeral)
[F SET]
(Numeral)
[O SET]
[STOP]
[CAN]
[EXEC]
[DELETE]
(Numeral)
[F SET]
[CAN]
[EXEC]

OFFSET/SETTING SCREEN (T series)

Soft key transition triggered by the function key OFFSET SETTING

1/2

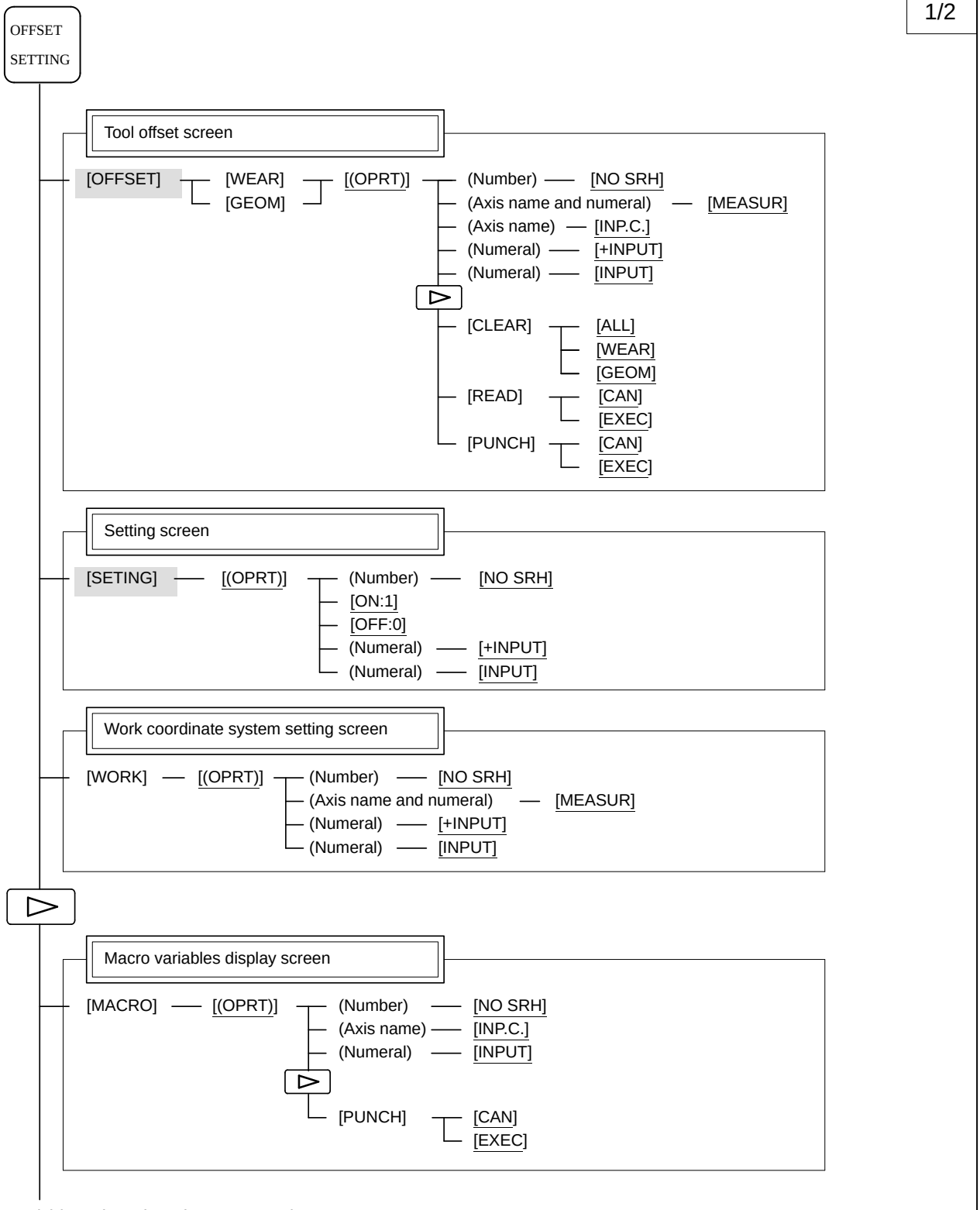

(1)(Continued on the next page)

2/2

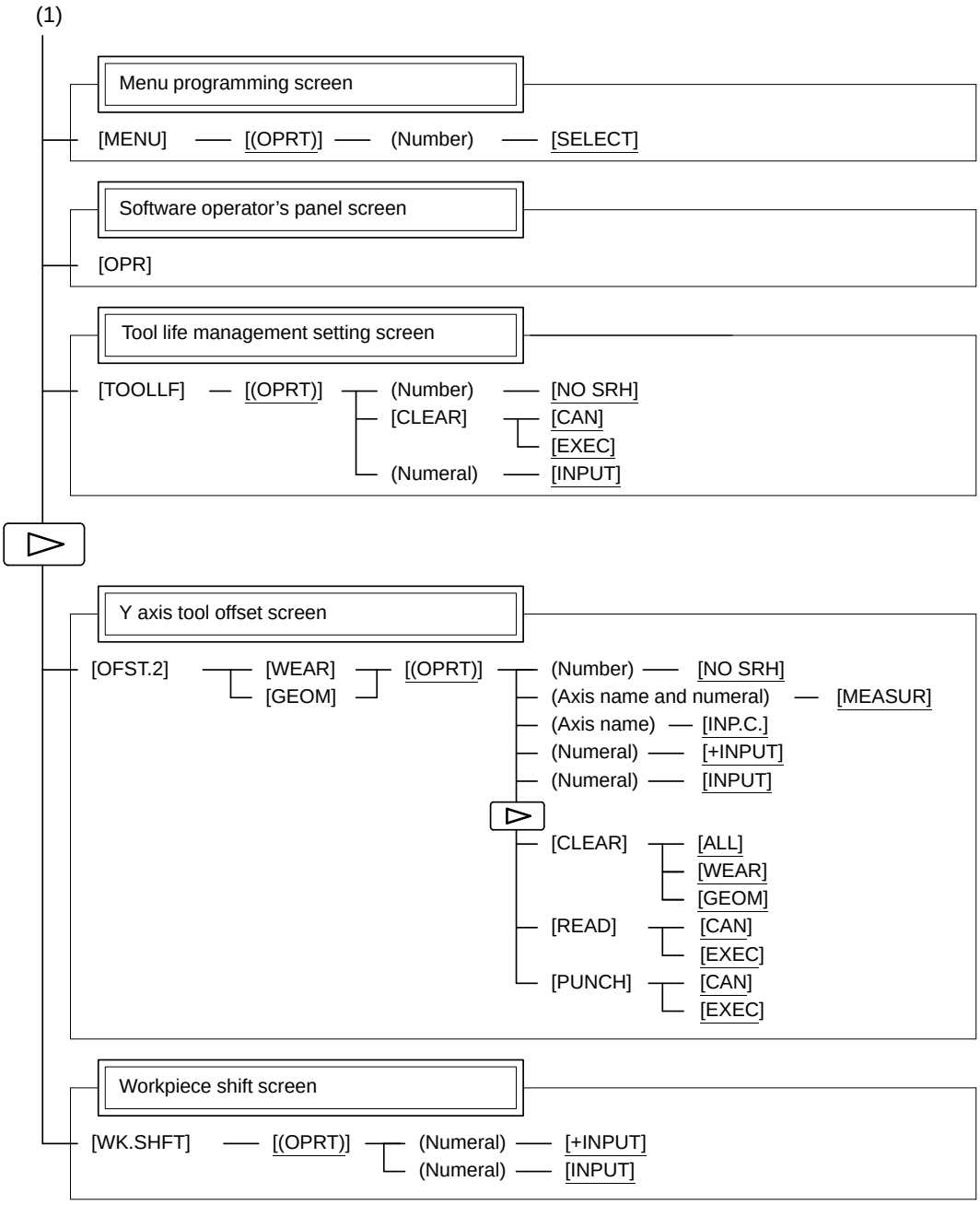
(1)
Menu programming screen
[MENU] [(OPRT)] (Number) [SELECT]
Software operator's panel screen
[OPR]
Tool life management setting screen
[TOOLLF] [(OPRT)] (Number) [NO SRH]
[CLEAR] [CAN]
[EXEC]
(Numeral) [INPUT]
Y axis tool offset screen
[OFST.2] [WEAR] [GEOM] [(OPRT)]
(Number) [NO SRH]
(Axis name and numeral) [MEASUR]
(Axis name) [INP.C.]
(Numeral) [+INPUT]
(Numeral) [INPUT]
[CLEAR] [ALL]
[WEAR]
[GEOM]
[READ] [CAN]
[EXEC]
[PUNCH] [CAN]
[EXEC]
Workpiece shift screen
[WK.SHFT] [(OPRT)] (Numeral) [+INPUT]
(Numeral) [INPUT]

OFFSET/SETTING SCREEN (M series)

Soft key transition triggered by the function key

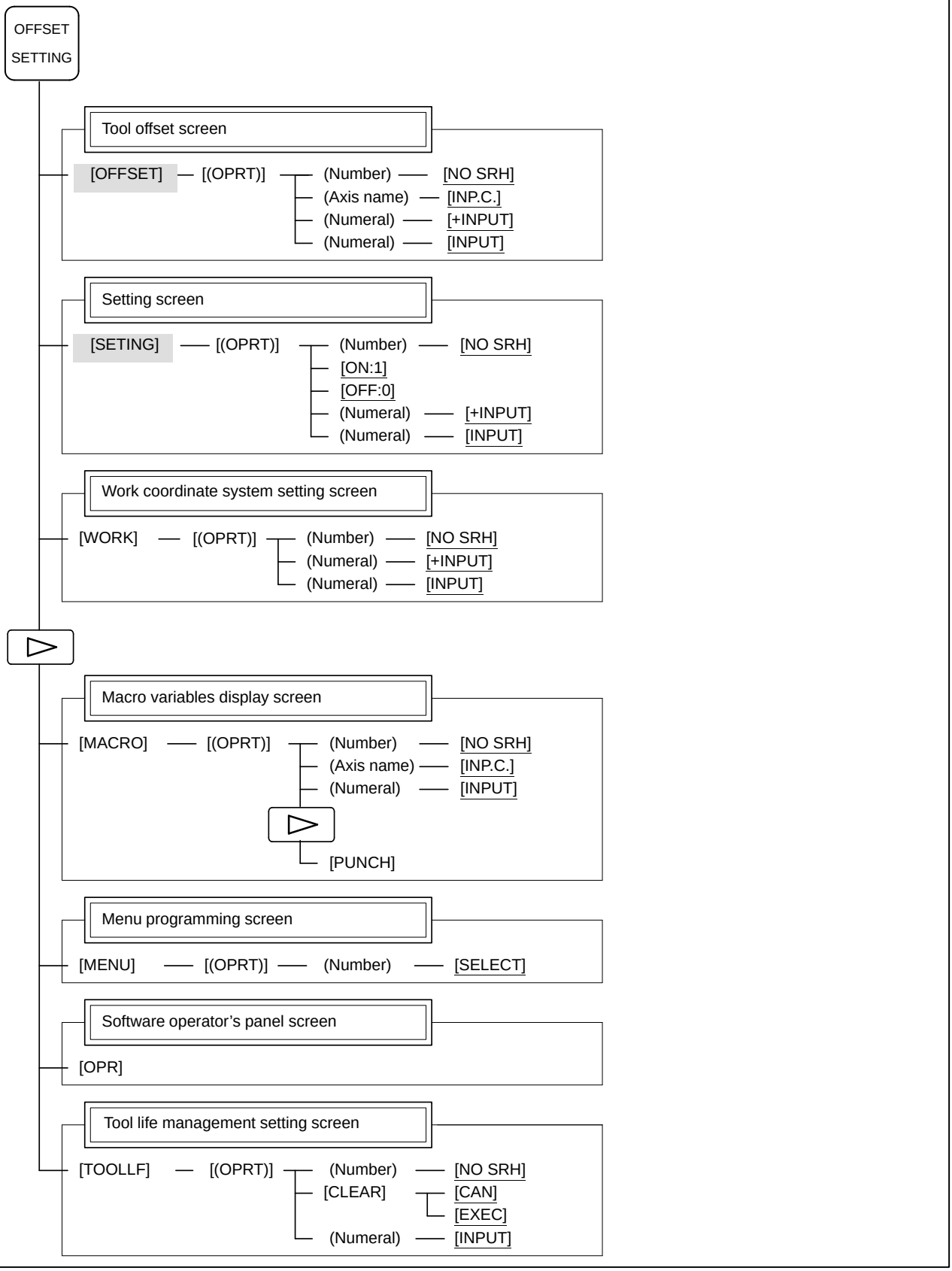

SYSTEM SCREEN

Soft key transition triggered by the function key [SYSTEM]

1/3

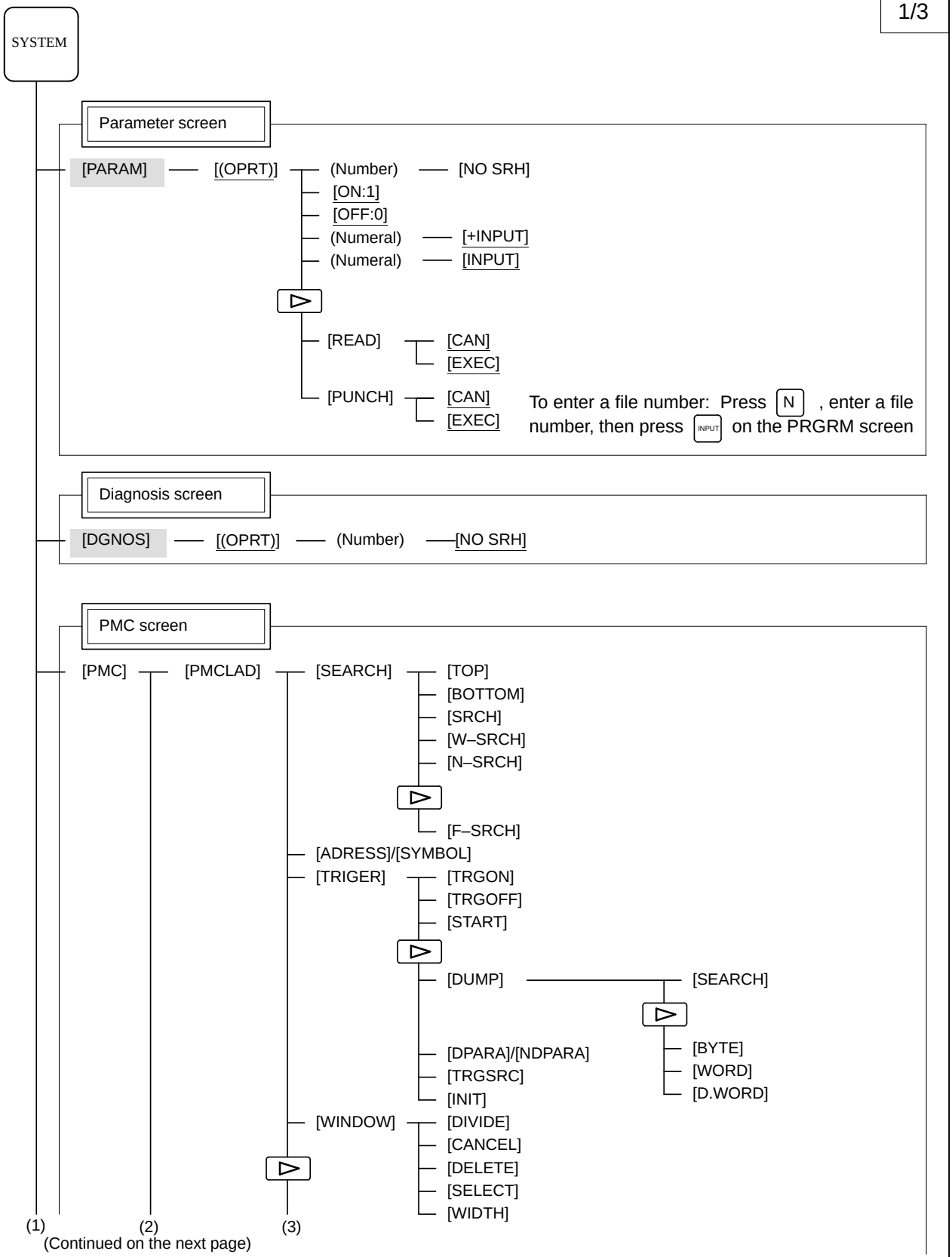

(Continued on the next page)

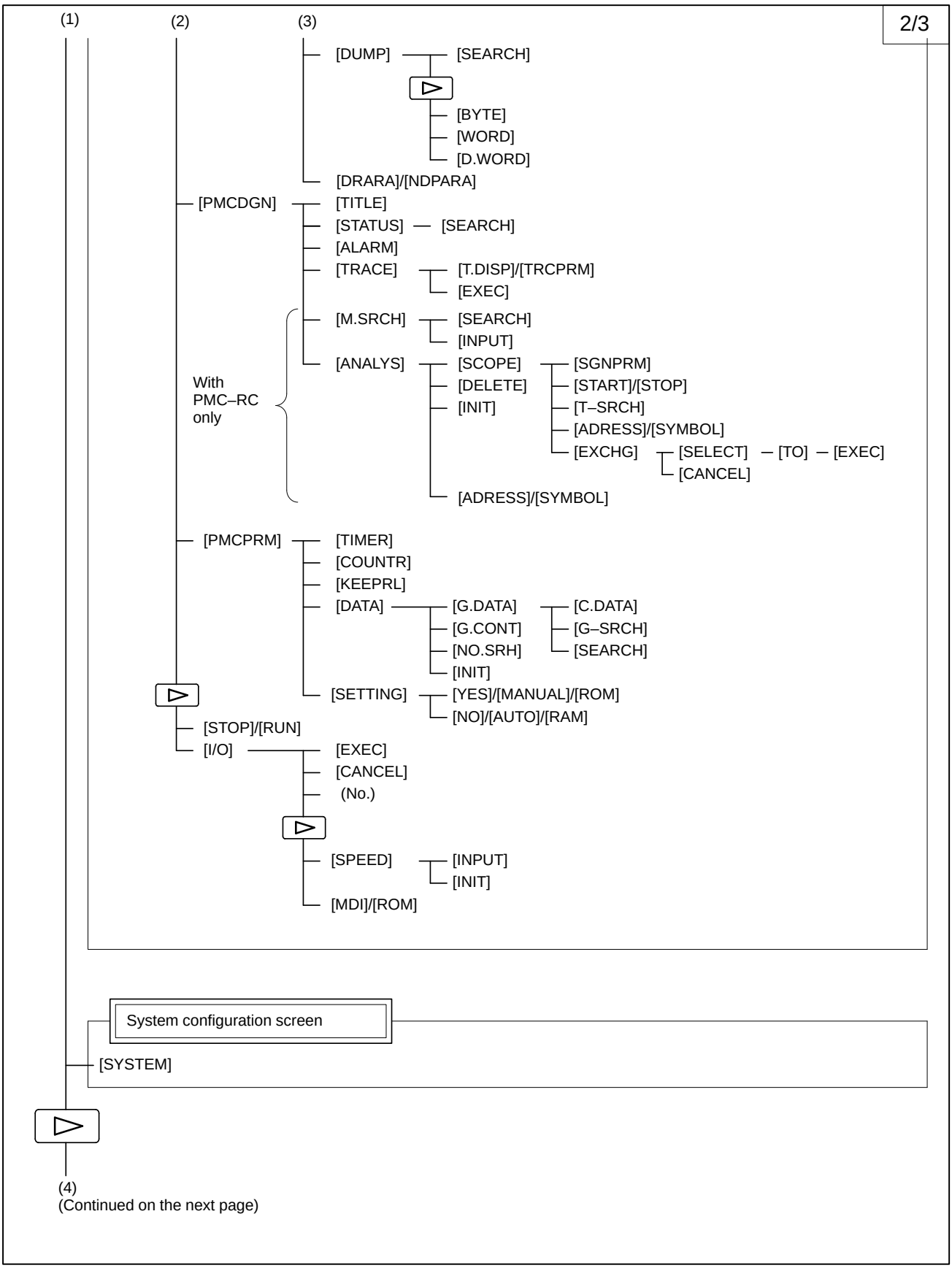
2/3
(1)
(2)
(3)
[DUMP]
[SEARCH]
[BYTE]
[WORD]
[D.WORD]
[DRARA]/[NDPARA]
[PMCDGN]
[TITLE]
[STATUS]
[SEARCH]
[ALARM]
[TRACE]
[T.DISP]/[TRCPRM]
[EXEC]
[M.SRCH]
[SEARCH]
[INPUT]
[ANALYS]
[SCOPE]
[SGNPRM]
[DELETE]
[START]/[STOP]
[INIT]
[T–SRCH]
[ADRESS]/[SYMBOL]
[EXCHG]
[SELECT]
[TO]
[EXEC]
[CANCEL]
With PMC–RC only
[ADRESS]/[SYMBOL]
[PMCPRM]
[TIMER]
[COUNTR]
[KEEPRL]
[DATA]
[G.DATA]
[C.DATA]
[G.CONT]
[G–SRCH]
[NO.SRH]
[SEARCH]
[INIT]
[SETTING]
[YES]/[MANUAL]/[ROM]
[NO]/[AUTO]/[RAM]
[STOP]/[RUN]
[I/O]
[EXEC]
[CANCEL]
(No.)
[SPEED]
[INPUT]
[INIT]
[MDI]/[ROM]
System configuration screen
[SYSTEM]
(4)
(Continued on the next page)

3/3

(4)

Pitch error compensation screen

- [PITCH] — [(OPRT)]
  - (No.) — [NO SRH]
  - [ON:1]
  - [OFF:0]
  - (Numeral) — [+INPUT]
  - (Numeral) — [INPUT]
  - ▷
  - [READ] — [CAN], [EXEC]
  - [PUNCH] — [CAN], [EXEC]

To enter a file number: Press [N], enter a file number, then press [INPUT] on the PRGRM screen

Servo parameter screen

- [SV.PRM]
  - [SV.SET], [SV.TUN] — [(OPRT)]
    - [ON:1]
    - [OFF:0]
    - (Numeral) — [INPUT]
  - [SV.TRC] — [(OPRT)]
    - [TRACE]
    - [TRNSF]

Spindle parameter screen

- [SP.PRM]
  - [SP.SET], [SP.TUN], [SP.MON] — [(OPRT)]
    - [ON:1]
    - [OFF:0]
    - [INPUT]

▷

Waveform diagnosis screen

- [W.DGNS]
  - [W.PRM]
  - [W.GRPH]
    - [STSRT]
    - [TIME→]
    - [←TIME]
    - [H–DOBL]
    - [H–HALF]
    - ▷
    - [STSRT]
    - [CH–1↑]
    - [CH–1↓]
    - [V–DOBL]
    - [V–HALF]
    - ▷
    - [STSRT]
    - [CH–2↑]
    - [CH–2↓]
    - [V–DOBL]
    - [V–HALF]

MESSAGE SCREEN

Soft key transition triggered by the function key

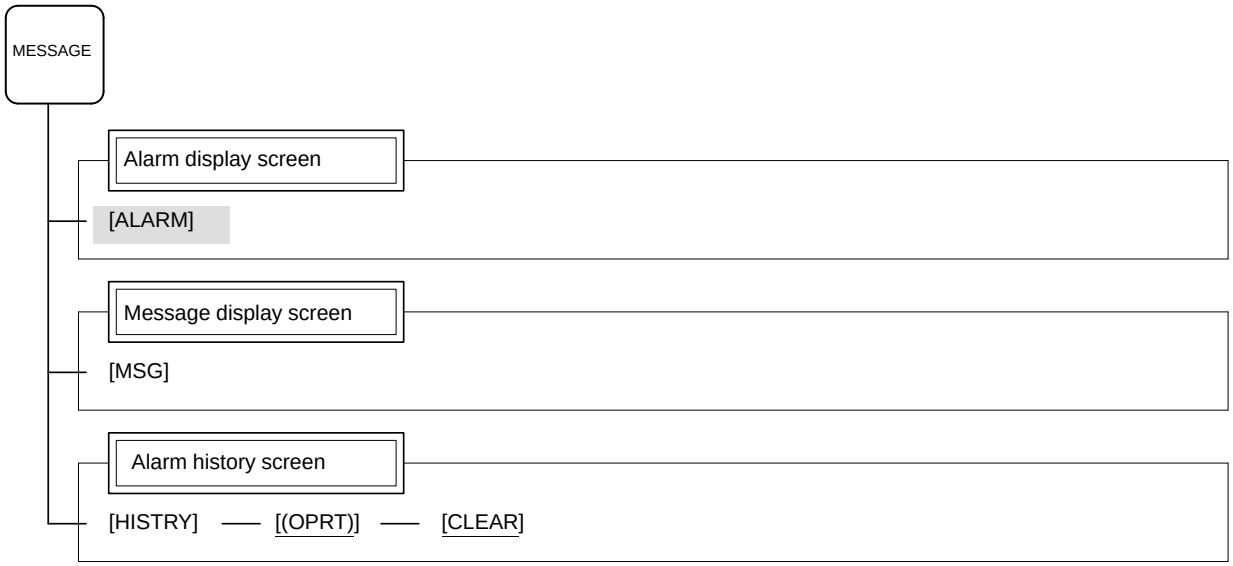

HELP SCREEN

Soft key transition triggered by the function key

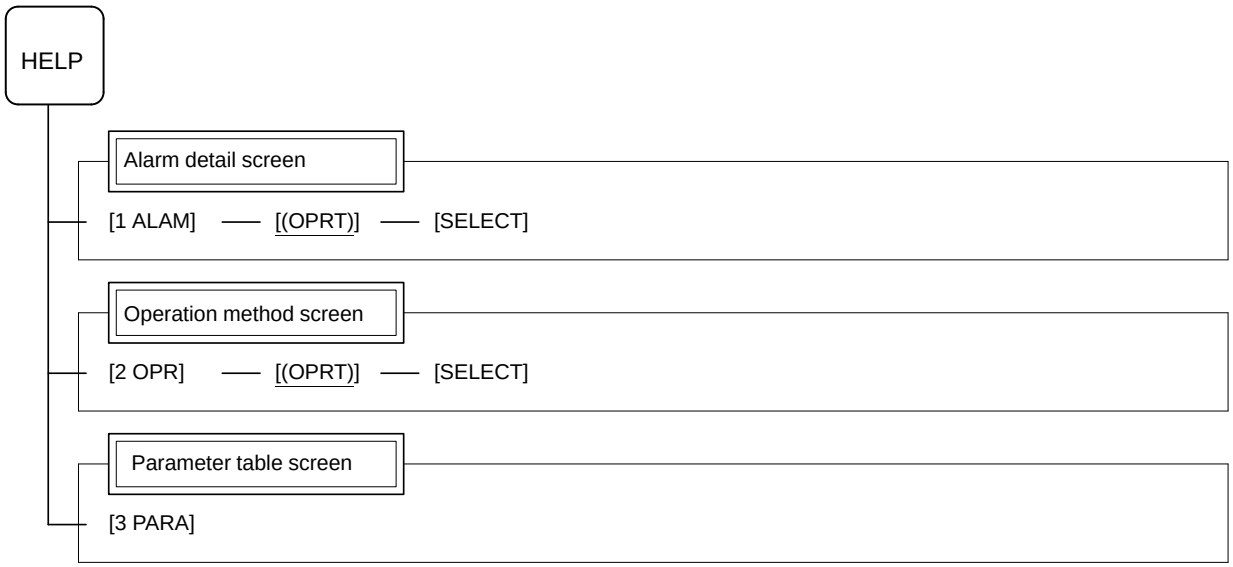

GRAPHIC SCREEN (T series)

Soft key transition triggered by the function key GRAPH

Tool path graphics

Mode 0

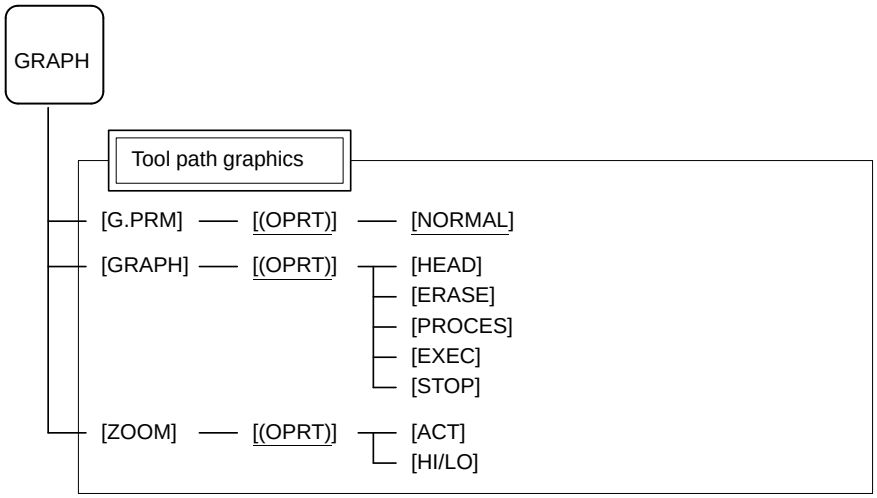

A.ST/Path graphics

Mode 1 to 3

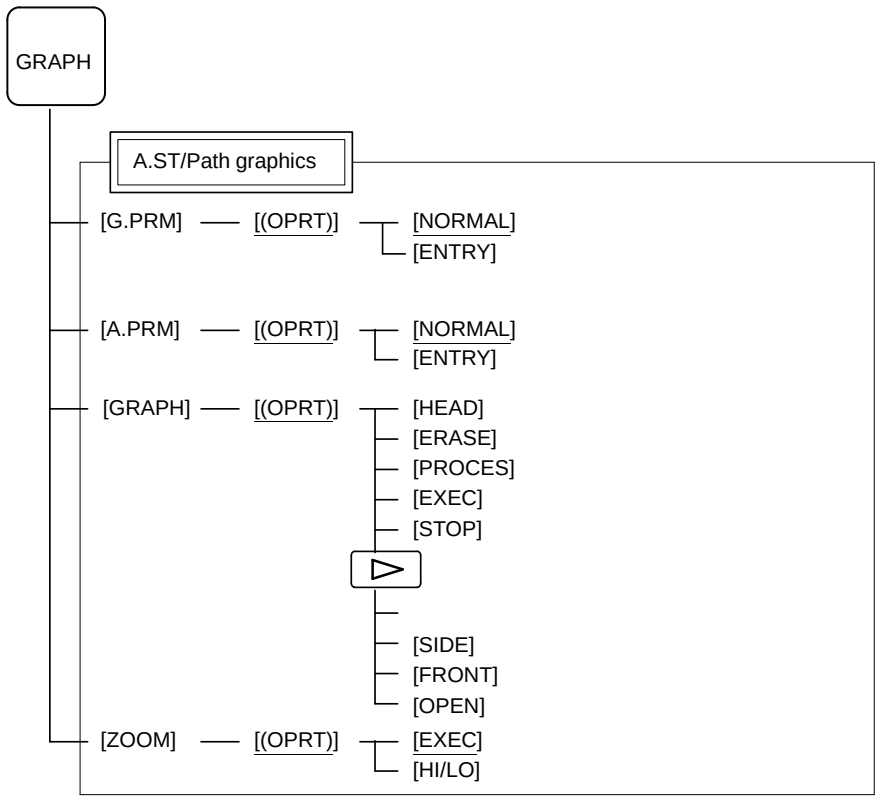

GRAPHIC SCREEN (M series)

Soft key transition triggered by the function key

GRAPH

Tool path graphics

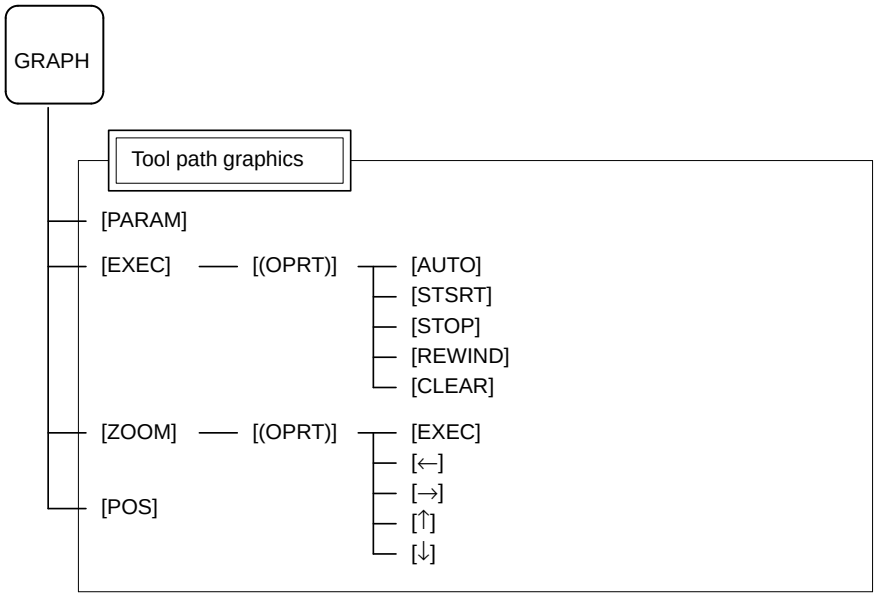

Solid graphics

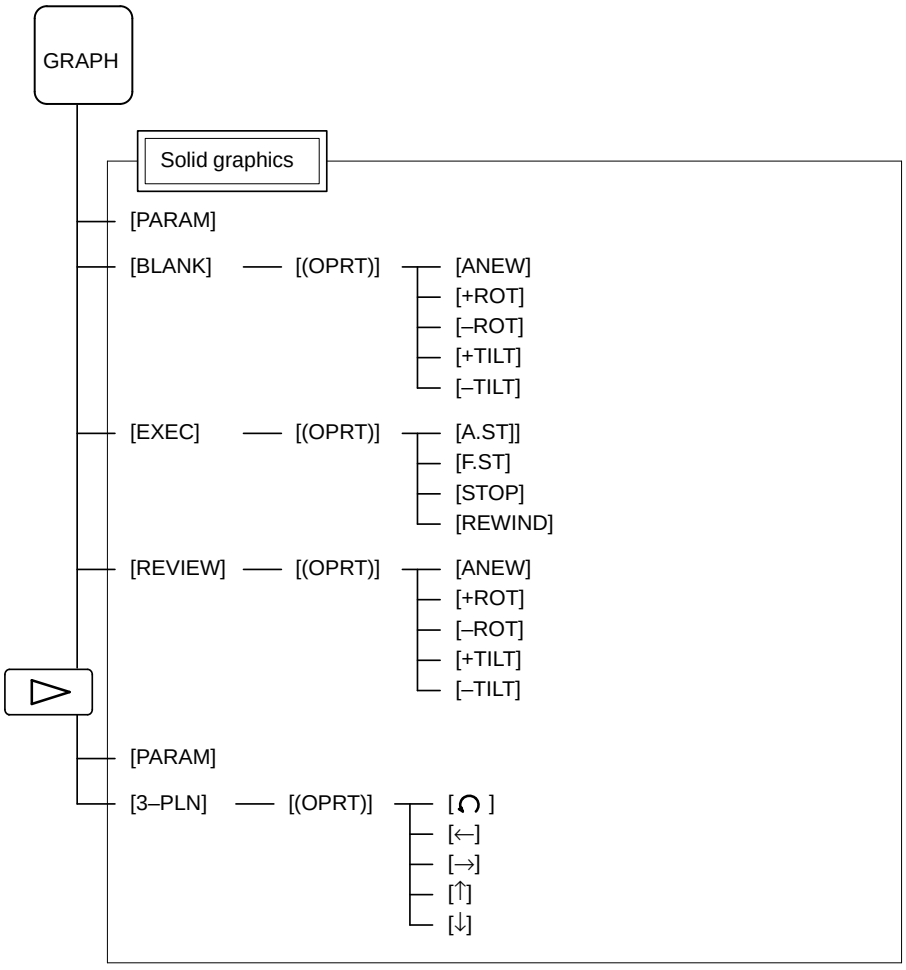

1.2 SCREEN DISPLAYED IMMEDIATELY AFTER POWER IS TURNED ON

1.2.1 Slot Status Display

Types of PCBs mounted on the slots are displayed.
If a hardware trouble or an incorrect mounting is found, this screen is displayed.

- **Slot state screen**

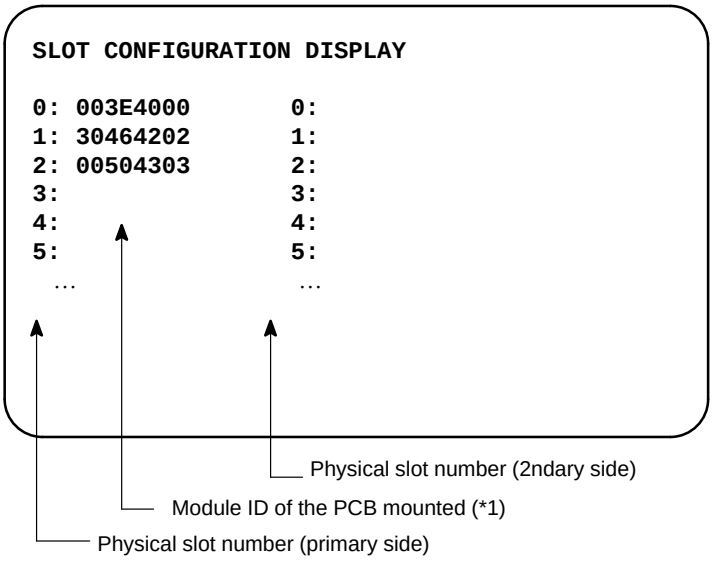

*1) Module ID of PCB

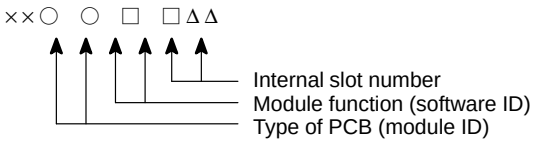

- **Module ID**

90 : Series 16 main CPU (For 4–axis) 9C : Series16 option 2
B2 : Series 16 main CPU (For 4–axis) B7 : Series16 option 2
A7 : Series 16 main CPU (For 6–axis) B0 : Series16/18 option 2
AD: Series 18 main CPU (For 4–axis)
AE : Series 18 main CPU (For 6–axis)
3F : Remote buffer DNC1
90 : PMC–RC
46 : I/O card (Sink type)
5F : I/O card (Source type)
A8 : I/O card with power supply (Sink type)
B1 : I/O card with power supply (Source type)
6D : CAP–II
45 : Graphic (CAP–II)
9A : Graphic

- **Software ID**

40 : Main CPU
41 : Option 3 board
42 : Built–in I/O card
4E :
45 : Graphic
50 : Additional 4–axis control (FS16 option 2)
46 : Graphic (CAP II)
49 : CAP II
4A : Remote buffer
43 : Sub CPU
4F :

1.2.2 Setting Module Screen

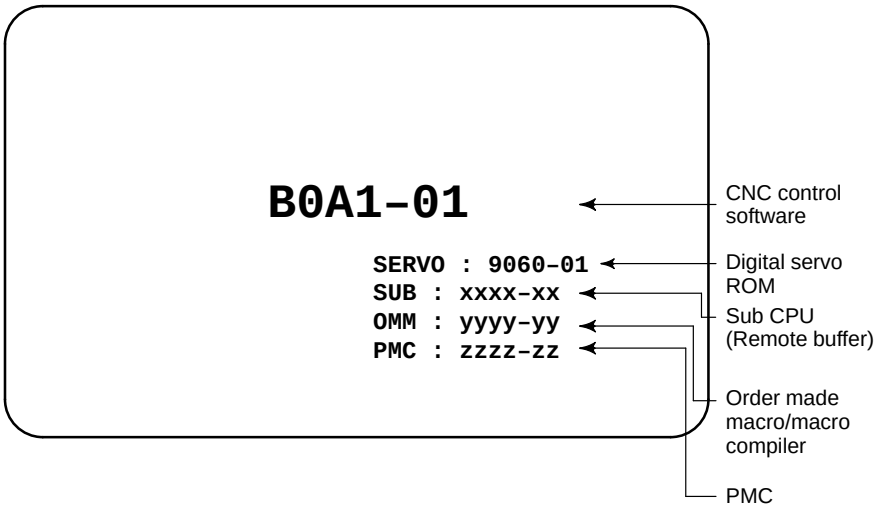

1.2.3 Configuration Display of Software

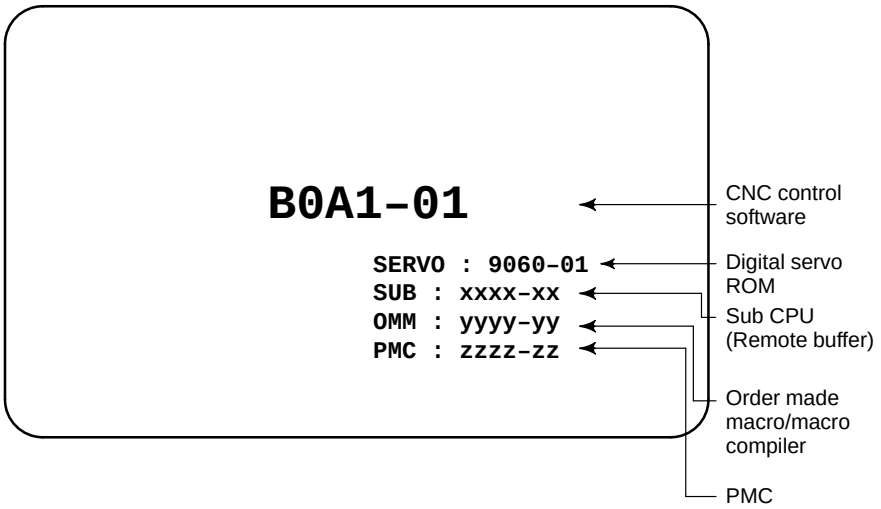

1.3 SYSTEM CONFIGURATION SCREEN

After the system has been installed correctly, you can find the PCBs installed and the softwares integrated on the system configuration screen.

1.3.1 Display Method

(1) Press SYSTEM key.

(2) Press soft key **[system]**,then the system configuration screen is displayed.

(3) The system configuration screen is composed of three screens and each of them can be selected by the page key PAGE ↑ PAGE ↓.

1.3.2 Configuration of PCBs

- **Screen**

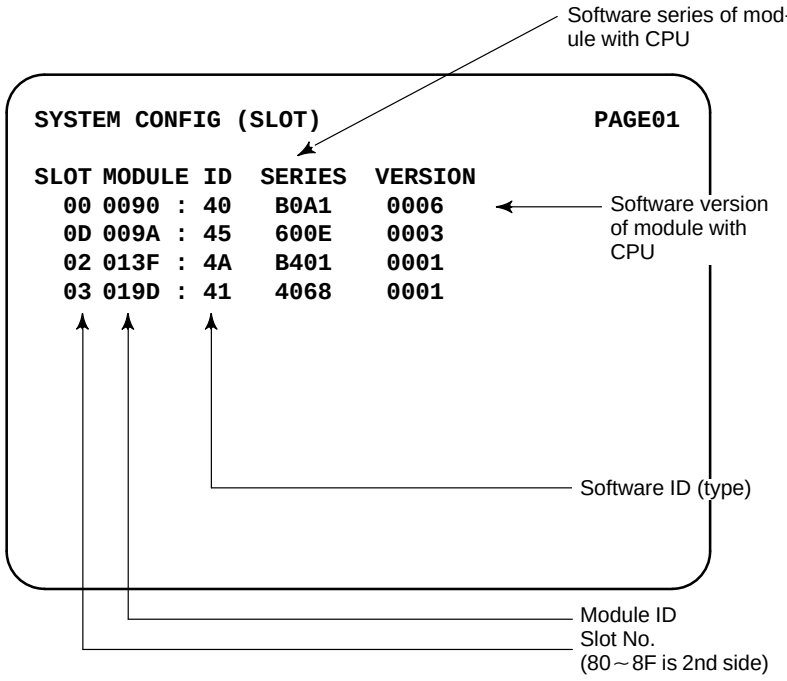

- **Module ID**

90 : Series 16 main CPU (For 4–axis) 9C : Series16 option 2
B2 : Series 16 main CPU (For 4–axis) B7 : Series16 option 2
A7 : Series 16 main CPU (For 6–axis) B0 : Series16/18 option 2
AD: Series 18 main CPU (For 4–axis)
AE : Series 18 main CPU (For 6–axis)
3F : Remote buffer DNC1
90 : PMC–RC
46 : I/O card (Sink type)
5F : I/O card (Source type)
A8 : I/O card with power supply (Sink type)
B1 : I/O card with power supply (Source type)
6D : CAP–II
45 : Graphic (CAP–II)
9A : Graphic

- **Software ID**

40 : Main CPU 49 : CAP II
41 : Option 3 board 4A : Remote buffer
42 : Built–in I/O card 43 : Sub CPU
4E : MAP 4F :
45 : Graphic
50 : Additional 4–axis control (FS16 option 2)
46 : Graphic (CAP–II)

1.3.3 Software Configuration Screen

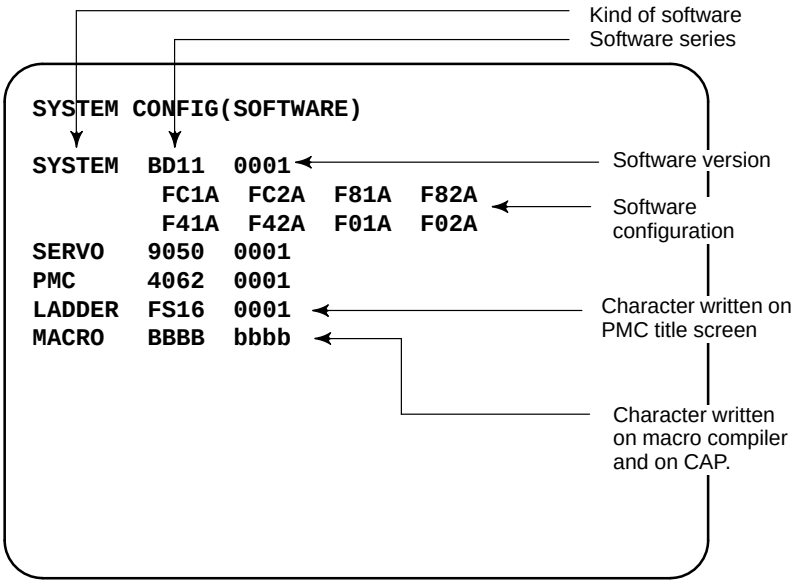

1.3.4 Module Configuration Screen

Configuration of the modules displayed on PCB.

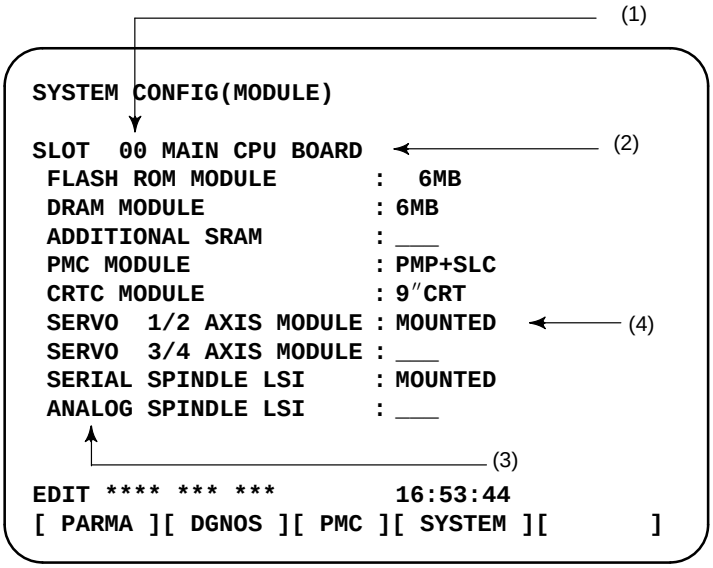

Contents of display

(1) Slot number (The number is corresponding to PCB configuration screen)

(2) Type of PCB mounted

(3) Type of mounted module or hardware

(4) Mounted or not, or type of module

Pressing the PAGE key displays the system configuration screen of other PCBs.

*Refer to ”Construction of Control Unit PCB” for correspondence with each module and display.

1.4 ALARM HISTORY SCREEN

1.4.1 General

Alarms generated in the NC are recorded. The latest 25 alarms generated are recorded. The 26th and former alarms are deleted.

1.4.2 Screen Display

(1) Press MESSAGE key .

(2) Press soft key **[HISTRY]** and an alarm history screen is displayed.

(3) Other pages are displayed by PAGE or PAGE key.

```
ALARM HISTORY                          O1234 N12345

91/04/18 20:56:26
 506 OVERTRAVEL :  +X
91/04/18 19:58:11
 000 TURN OFF POWER
91/04/18 19:52:45
 000 TURN OFF POWER
91/04/18 19:48:43
 300 APC ALARM  : X–AXIS ZERO RETURN REQUEST
91/04/18 18:10:10
 507 OVERTRAVEL :  +B



[ ALARM ][ MSG ][ HISTRY ][       ][ (OPE) ]
```

1.4.3 Clearing Alarm History

(1) Press soft key **[(OPE)]**.

(2) Press soft key **[(CLEAR]**, then the alarm history is cleared.

1.4.4 Alarm Display

When an external alarm (No. 1000 to 1999) or a macro alarm (No. 3000 to 3999) is output, the alarm history function can record both the alarm number and message if so specified in the following parameter. If recording of the message is not set or if no message is input, only an external alarm or macro alarm is displayed.

	#7	#6	#5	#4	#3	#2	#1	#0
3112					EAH			

[Data type] Bit

#3 (EAH) The alarm history function:

0 : Does not record the messages output with external alarms or macro alarms.

1 : Records the messages output with external alarms or macro alarms.

1.5 EXTERNAL OPERATOR MESSAGES RECORD

This function enables the saving of external operator messages as a record.
The record can be viewed on the external operator message history screen.

1.5.1 Screen Display

(1) Press the MESSAGE function key.

(2) Press the rightmost soft key [>>].
[ALARM] [MGS] [HISTRY] [ ] [(OPRT)]>>
↑

(3) Press the **[MSGHIS]** soft key.

(4) To display the previous or subsequent screen, press the PAGE ↑ or PAGE ↓ key.

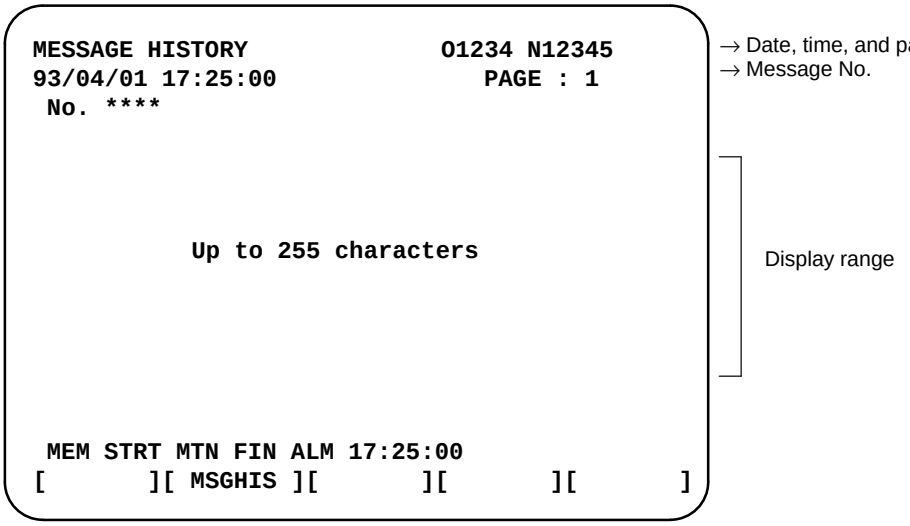

1.5.2 Deletion of External Operator Messages Record

(1) The recorded external operator message can be deleted by setting the MMC bit (bit 0 of parameter 3113) to 1.
Pressing the **[CLEAR]** soft key erases all the records of the external operator message.

(2) The MS1 and MS0 bits (bits 7 and 6 of parameter 3113) specify the number of records to be displayed on the external operator message history screen. When the bits are changed, all external operator message records retained up to that point are erased.

1.5.3 Parameter

	#7	#6	#5	#4	#3	#2	#1	#0
3113	MS1	MS0						MHC

#0 (MHC) The records of an external operator message:

0 : Cannot be erased.
1 : Can be erased.

MS0,MS1 These bits set the number of characters to be retained in each record of an external operator message, as well as the number of records, as shown in the following table:

MS1	MS0	Number of characters in each record	Number of records
0	0	255	8
0	1	200	10
1	0	100	18
1	1	50	32

* An external operator message of up to 255 characters can be specified. Combining the MS1 bit and MS0 bit (bits 7 and 6 of parameter No. 3113) selects the number of records by limiting the number of characters to be retained as the record of an external operator message.

	#7	#6	#5	#4	#3	#2	#1	#0
3112						OMH		

#2 (OMH) The external operator message history screen is:

0 : Not displayed.
1 : Displayed.

Note) After setting this parameter, briefly turn the power off, then on again.

1.5.4 Notes

When the number of an external operator message is specified, the system starts updating the records of the specified message. The system continues to perform update until another external operator message is specified or until an instruction to delete the records of the external operator message is specified.

1.6 OPERATION HISTORY

This function displays the key and signal operations performed by the NC operator upon the occurrence of a fault or the output of an NC alarm, together with the corresponding NC alarms.
This function records the following data:

(1) MDI key operations performed by the NC operator

(2) Status changes (ON/OFF) of input and output signals (selected signals only)

(3) Details of NC alarms

(4) Time stamp (date and time)

1.6.1 Parameter Setting

	#7	#6	#5	#4	#3	#2	#1	#0
3106	OHS			OPH				

[Data type] Bit

#4 (OPH) The operation history screen is:

0 : Not displayed.

☆ 1 : Displayed.

#7 (OHS) The operation history is:

0 : Sampled.

1 : Not sampled.

	#7	#6	#5	#4	#3	#2	#1	#0
3112			OPH					

[Data type] Bit

OPH The operation history function is:

0 : Disabled.

1 : Enabled.

3122	Interval at which the clock time is recorded in the operation history

[Data type] Word

[Units of data] Minutes

[Valid data range] 0 to 1439

The clock time is recorded to the operation history at specified intervals. If zero is set as the interval, ten minutes is assumed. The time is recorded only when data is recorded within the corresponding interval.

1.6.2 Screen Display

- **Displaying the operation history**

(1) Press the SYSTEM function key.

(2) Press the continue menu key [▷]. The **[OPEHIS] [(OPRT)]** soft key are displayed.

(3) Press the **[OPEHIS]** soft key twice. The operation history screen is displayed.

```
OPERATION HISTORY                    O1234 N12345
                                       Page : 123
  No.DATA       No.DATA       No.DATA
  01 92/06/03   11 F0000.7↑  21 F0001.0↓
  02 08:40:00   12 F0000.5↑  22 <POS>
  03 <DELETE    13 F0001.0↑  23 <PROG>
  04 F0000.6↑  14 F0000.5↓  24 <RESET>
  05 MEM       15 P/S0010     25 EDIT
  06 G0009.0↑  16 92/06/03    26 O
  07 G0009.1↑  17 09:27:49    27 1
  08 G0009.2↑  18 <PROG>      28 2
  09 ST↑         19 <RESET>   29 3
  10 ST↓       20 F0000.7↓  30 4

EDIT ****   ***  ***            08:20:52
[  TOP  ][ BOTTOM ][       ][      ][PG.SRH]
```

On the operation history screen, the soft keys are configured as shown below:

```
Í  [▷ ] [ PARAM ] [DGNOS]  [PMC] [SYSTEM] [(OPE)]    [▷]
                                                  ⇓ push
[◁ ]    [W.DGNS] [       ]  [     ] [OPEHIS]  [(OPE)]    [▷]
                                        ⇓ push
[◁ ]    [ OPEHIS ] [SG–SEL] [     ] [       ]  [(OPE)]    [▷]
                                                  ⇓ push
[◁ ]    [  TOP  ]  [BOTTOM][     ] [       ]  [PG.SRH]  [▷]
```

(4) To display the next part of the operation history, press the page down key PAGE ⇓. The next page is displayed.

To display the interface between two pages, press cursor key → or ←. The screen is scrolled by one row. On a 14–inch CRT screen, pressing the cursor key scrolls the screen by half a page.

These soft keys can also be used:

1 Pressing the **[TOP]** soft key displays the first page (oldest data).

2 Pressing the **[BOTTOM]** soft key displays the last page (latest data).

3 Pressing the **[PG.SRH]** soft key displays a specified page.

Example) By entering 50 then pressing the **[PG.SRH]** key, page 50 is displayed.

Data displayed on the operation history screen

(1) MDI keys

Address and numeric keys are displayed after a single space.
Soft keys are displayed in square brackets ([]).
Other keys (RESET/INPUT, for example) are displayed in angle brackets (<>).
A key pressed at power–on is displayed in reverse video.
For two–path control, the operations of path 2 are displayed in the same way, but preceded by S_.

1 Function key: POS , PROG , OFFSET SETTING , etc.

2 Address/numeric key: A to Z, 0 to 9, ; (EOB), +, –, (, etc.

3 Page/cursor key: PAGE , , ,

4 Soft key: [SF1], [SF2], etc.

5 Other key: RESET , CAN , etc.

6 Key pressed at power–on: RESET

(2) Input and output signals

General signals are displayed in the following format:

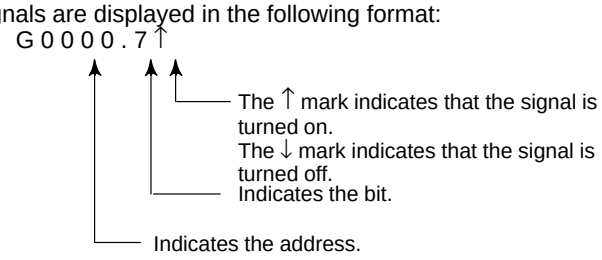

Some signals are indicated by their symbol names.

SBK ↑ (Indicates that the single block switch is turned on.)

Mode selection signals and rapid traverse override signals are displayed as indicated below:

Input signal					Name displayed
MD1	ND2	MD4	REF	DNC1	
0	0	0	0	0	MDI
1	0	0	0	0	MEM
1	0	0	0	1	RMT
0	1	0	0	0	NOMODE
1	1	0	0	0	EDT
0	0	1	0	0	H/INC
1	0	1	0	0	JOG
1	0	1	1	0	REF
0	1	1	0	0	TJOG
1	1	1	0	0	THND

Input signal		Name displayed
RV1	RV2	
0	0	R 100%
1	0	R 50%
0	1	R 25%
1	1	R F0%

(3) NC alarms

NC alarms are displayed in reverse video.
P/S alarms, system alarms, and external alarms are displayed together with their numbers.
For other types of alarms, only the alarm type is displayed. (No details are displayed.)
For two–path control, the operations of path 2 are displayed in the same way, but preceded by S_.

Example) P/S0050, SV_ALM, S_APC_ALM

(4) Time stamp (date and time)

The following time data (date and time) is recorded:

1 Date and time of power–on
2 Date and time of power–off
3 Date and time when an NC alarm occurs
4 The clock time is recorded at predetermined intervals, together with each new calendar day.

1) The power–on time is displayed as shown below:
   92/01/20 ==== Year/Month/Day
   09:15:30 ==== Hour:Minute:Second
2) The power–off time and the time when an NC alarm occurred are displayed in reverse video.
   92/01/20 ==== Year/Month/Day
   09:15:30 ==== Hour:Minute:Second
   If a system alarm occurs, the date and time are not recorded.
3) At predetermined intervals, the clock time is displayed in reverse video. Set the interval in minutes in parameter No. 3122. If zero is set, the time is stamped at ten–minute intervals.
   09:15:30 ==== Hour:Minute:Second
   Each new calendar day is displayed in reverse video.
   92/01/20 ==== Year/Month/Day

Note
The clock time is recorded for a specified interval only when data is stored within that interval.

- **Input signal or output signal to be recorded in the operation history**

(1) P ress the SYSTEM function key.

(2) Press the continue menu key [▷]. The **[OPEHIS]** (operation history) soft key is displayed.

(3) Press the **[OPEHIS]** soft key, then press the **[SG–SEL]** soft key. The operation history signal selection screen is displayed.

```
OP_HIS SIGNAL SELECT              O1000 N02000

 No.  ADDRES  SIGNAL    No.  ADDRES  SIGNAL
 01   X0000   00001000  11   G0000   00000001
 02   X0004   10000000  12   G0004   00000011
 03   X0008   00001100  13   G0008   00000111
 04   X0009   00111000  14   G0003   00001111
 05   X0012   00001111  15   G0043   01100000
 06   Y0000   01000000  16           ********
 07   Y0004   00110000  17           ********
 08   Y0007   00011100  18           ********
 09   Y0008   00011100  19           ********
 10   Y0010   00011100  20           ********
 >
   EDIT  **** *** * * *  00:00:00
[OPEHIS] [SG-SEL] [      ] [      ] [ (OPE) ]
```

1.6.3 Setting The Input Signal or Output Signal to Be Recorded in The Operation History

(1) On the operation history signal selection screen, press the **[(OPE)]** soft key.

```
OP_HIS SIGNAL SELECT            O1000 N02000

 No.  ADDRES SIGNAL    No.  ADDRES SIGNAL
 01   G0004  00000010  11          ********
 02          ********  12          ********
 03          ********  13          ********
 04          ********  14          ********
 05          ********  15          ********
 06          ********  16          ********
 07          ********  17          ********
 08          ********  18          ********
 09          ********  19          ********
 10          ********  20          ********
 >
   EDIT **** *** *** *** 00:00:00
[ ALLDEL ][ DELETE ][ ON:1 ][ OFF:0 ][       ]
```

(2) Press the cursor key ↑ or ↓ to position the cursor to a desired position.

(3) Key in a signal type (X, G, F, or Y) and an address, then press the INPUT key.

Example) G0004 INPUT

Signal address G0004 is set in the ADDRES column. The corresponding position in the SIGNAL column is initialized to 000000000.

(4) Select the bit to be recorded.

To select all bits of the specified signal address, press the **[ON:1]** soft key while the cursor is positioned to 00000000 .

To select a particular bit, position the cursor to that bit by pressing the cursor key ← or →, then press the **[ON:1]** soft key. To cancel a selection made by pressing the **[ON:1]** soft key or to cancel a previously selected signal, press the **[OFF:0]** soft key.

(5) Up to 20 addresses can be specified by means of this signal selection. These addresses need not always be specified at consecutive positions, starting from No.1.

(6) Pressing the **[ALLDEL]** and **[EXEC]** soft keys deletes all data. If the **[ALLDEL]** key is pressed by mistake, it can be cancelled by pressing the **[CAN]** key.

(7) To delete a selected signal address, position the cursor to the corresponding position then press the **[DELETE]** and **[EXEC]** soft keys. In the SIGNAL column, asterisks ******** are displayed in place of the deleted data. In the ADDRES column, the corresponding position is cleared.

If the **[DELET]** key is pressed by mistake, it can be cancelled by pressing the **[CAN]** key.

(8) Pressing the return menu key [◁] causes the **[OPEHIS]** (OPE) soft key to be displayed again.

- **Input signals and output signals to be recorded in the history**

Notes
1 A cross (×) indicates that a signal will not be recorded. Also, any signal for which an address is not specified will not be recorded, either.
2 A circle (○) indicates that a signal can be recorded.
3 A signal indicated by its symbol name will also be displayed by its symbol name.

1. M/T addresses

MT→PMC

	#7	#6	#5	#4	#3	#2	#1	#0
X000	○	○	○	○	○	○	○	○
:								
X127	○	○	○	○	○	○	○	○

PMC→CNC

	#7	#6	#5	#4	#3	#2	#1	#0
G000	○	○	○	○	○	○	○	○
:								
G003	○	○	○	○	○	○	○	○
G004	○	○	○	○	FIN	○	○	○
G005	○	○	○	○	TFIN	SFIN	○	MFIN
G006	○	○	○	○	○	*ABS	○	SRN
G007	RLSOT	EXLM	*FLUP	○	○	ST	STLK	○
G008	ERS	RRW	*SP	*ESP	○	○	○	*IT
G009	○	○	○	○	○	○	○	○
:								
G013	○	○	○	○	○	○	○	○
G014	○	○	○	○	○	○	○	○
G015	○	○	○	○	○	○	○	○
:								
G018	○	○	○	○	○	○	○	○
G019	RT	○	○	○	○	○	○	○

	#7	#6	#5	#4	#3	#2	#1	#0
G020	○	○	○	○	○	○	○	○
:								
G042	○	○	○	○	○	○	○	○
G043	○	×	○	×	×	○	○	○
G044	○	○	○	○	○	○	MLK	BDT1
G045	BDT9	BDT8	BDT7	BDT6	BDT5	BDT4	BDT3	BDT2
G046	DRN	KEY4	KEY3	KEY2	KEY1	○	SBK	○
G047	○	○	○	○	○	○	○	○
:								
G060	○	○	○	○	○	○	○	○
G061	○	○	○	○	○	○	○	RGTA
G062	○	○	○	○	○	○	○	○
:								
G099	○	○	○	○	○	○	○	○
G100	+J8	+J7	+J6	+J5	+J4	+J3	+J2	+J1
G101	○	○	○	○	○	○	○	○
G102	–J8	–J7	–J6	–J5	–J4	–J3	–J2	–J1
G103	○	○	○	○	○	○	○	○
:								
G105	○	○	○	○	○	○	○	○
G106	MI8	MI7	MI6	MI5	MI4	MI3	MI2	MI1
G107	○	○	○	○	○	○	○	○
G108	MLK8	MLK7	MLK6	MLK5	MLK4	MLK3	MLK2	MLK1
G109	○	○	○	○	○	○	○	○
G110	+LM8	+LM7	+LM6	+LM5	+LM4	+LM3	+LM2	+LM1
G111	○	○	○	○	○	○	○	○
G112	–LM8	–LM7	–LM6	–LM5	–LM4	–LM3	–LM2	–LM1
G113	○	○	○	○	○	○	○	○
G114	*+L8	*+L7	*+L6	*+L5	*+L4	*+L3	*+L2	*+L1

	#7	#6	#5	#4	#3	#2	#1	#0
G115	○	○	○	○	○	○	○	○
G116	*–L8	*–L7	*–L6	*–L5	*–L4	*–L3	*–L2	*–L1
G117	○	○	○	○	○	○	○	○
G118	*+ED8	*+ED7	*+ED6	*+ED5	*+ED4	*+ED3	*+ED2	*+ED1
G119	○	○	○	○	○	○	○	○
G120	*–ED8	*–ED7	*–ED6	*–ED5	*–ED4	*–ED3	*–ED2	*–ED1
G121	○	○	○	○	○	○	○	○
:								
G125	○	○	○	○	○	○	○	○
G126	SVF8	SVF7	SVF6	SVF5	SVF4	SVF3	SVF2	SVF1
G127	○	○	○	○	○	○	○	○
:								
G129	○	○	○	○	○	○	○	○
G130	*IT8	*IT7	*IT6	*IT5	*IT4	*IT3	*IT2	*IT1
G131	○	○	○	○	○	○	○	○
G132	○	○	○	○	+MIT4	+MIT3	+MIT2	+MIT1
G133	○	○	○	○	○	○	○	○
G134	○	○	○	○	–MIT4	–MIT3	–MIT2	–MIT1
G135	○	○	○	○	○	○	○	○
:								
G255	○	○	○	○	○	○	○	○

PMC→MT

	#7	#6	#5	#4	#3	#2	#1	#0
Y000	○	○	○	○	○	○	○	○
:								
Y127	○	○	○	○	○	○	○	○

CNC→PMC

	#7	#6	#5	#4	#3	#2	#1	#0
F000	○	○	○	○	○	○	○	○
:								
F255	○	○	○	○	○	○	○	○

2. List of Address for 2–path control

MT→PMC

	#7	#6	#5	#4	#3	#2	#1	#0
X000	○	○	○	○	○	○	○	○
:								
X127	○	○	○	○	○	○	○	○

PMC→CNC (Signals for tool post 1)

	#7	#6	#5	#4	#3	#2	#1	#0
G000	○	○	○	○	○	○	○	○
:								
G003	○	○	○	○	○	○	○	○
G004	○	○	○	○	FIN	○	○	○
G005	○	○	○	○	TFIN	SFIN	○	MFIN
G006	○	○	○	○	○	*ABS	○	SRN
G007	RLSOT	EXLM	*FLUP	○	○	ST	STLK	○
G008	ERS	RRW	*SP	*ESP	○	○	○	*IT
G009	○	○	○	○	○	○	○	○
:								
G013	○	○	○	○	○	○	○	○
G014	○	○	○	○	○	○	○	○
G015	○	○	○	○	○	○	○	○
:								
G018	○	○	○	○	○	○	○	○
G019	RT	○	○	○	○	○	○	○
G020	○	○	○	○	○	○	○	○
:								
G042	○	○	○	○	○	○	○	○
G043	○	×	○	×	×	○	○	○
G044	○	○	○	○	○	○	MLK	BDT1
G045	BDT9	BDT8	BDT7	BDT6	BDT5	BDT4	BDT3	BDT2
G046	DRN	KEY4	KEY3	KEY2	KEY1	○	SBK	○
G047	○	○	○	○	○	○	○	○
:								
G060	○	○	○	○	○	○	○	○

	#7	#6	#5	#4	#3	#2	#1	#0
G061	○	○	○	○	○	○	○	RGTA
G062	○	○	○	○	○	○	○	○
:								
G099	○	○	○	○	○	○	○	○
G100	+J8	+J7	+J6	+J5	+J4	+J3	+J2	+J1
G101	○	○	○	○	○	○	○	○
G102	–J8	–J7	–J6	–J5	–J4	–J3	–J2	–J1
G103	○	○	○	○	○	○	○	○
:								
G105	○	○	○	○	○	○	○	○
G106	MI8	MI7	MI6	MI5	MI4	MI3	MI2	SMI1
G107	○	○	○	○	○	○	○	○
G108	MLK8	MLK7	MLK6	MLK5	MLK4	MLK3	MLK2	MLK1
G109	○	○	○	○	○	○	○	○
G110	+LM8	+LM7	+LM6	+LM5	+LM4	+LM3	+LM2	+LM1
G111	○	○	○	○	○	○	○	○
G112	–LM8	–LM7	–LM6	–LM5	–LM4	–LM3	–LM2	–LM1
G113	○	○	○	○	○	○	○	○
G114	*+L8	*+L7	*+L6	*+L5	*+L4	*+L3	*+L2	*+L1
G115	○	○	○	○	○	○	○	○
G116	*–L8	*–L7	*–L6	*–L5	*–L4	*–L3	*–L2	*–L1
G117	○	○	○	○	○	○	○	○
G118	*+ED8	*+ED7	*+ED6	*+ED5	*+ED4	*+ED3	*+ED2	*+ED1
G119	○	○	○	○	○	○	○	○
G120	*–ED8	*–ED7	*–ED6	*–ED5	*–ED4	*–ED3	*–ED2	*–ED1
G121	○	○	○	○	○	○	○	○
:								
G125	○	○	○	○	○	○	○	○

	#7	#6	#5	#4	#3	#2	#1	#0
G126	SVF8	SVF7	SVF6	SVF5	SVF4	SVF3	SVF2	SVF1
G127	○	○	○	○	○	○	○	○
:								
G129	○	○	○	○	○	○	○	○
G130	*IT8	*IT7	*IT6	*IT5	*IT4	*IT3	*IT2	*IT1
G131	○	○	○	○	○	○	○	○
G132	○	○	○	○	+MIT4	+MIT3	+MIT2	+MIT1
G133	○	○	○	○	○	○	○	○
G134	○	○	○	○	–MIT4	–MIT3	–MIT2	–MIT1
G135	○	○	○	○	○	○	○	○
:								
G255	○	○	○	○	○	○	○	○

PMC→CNC (Signals for the 2–path)

	#7	#6	#5	#4	#3	#2	#1	#0
G1000	○	○	○	○	○	○	○	○
:								
G1003	○	○	○	○	○	○	○	○
G1004	○	○	○	○	FIN	○	○	○
G1005	○	○	○	○	TFIN	SFIN	○	MFIN
G1006	○	○	○	○	○	*ABS	○	SRN
G1007	RLSOT	EXLM	*FLUP	○	○	ST	STLK	○
G1008	ERS	RRW	*SP	*ESP	○	○	○	*IT
G1009	○	○	○	○	○	○	○	○
:								
G1013	○	○	○	○	○	○	○	○
G1014	○	○	○	○	○	○	○	○
G1015	○	○	○	○	○	○	○	○
:								
G1018	○	○	○	○	○	○	○	○
G1019	RT	○	○	○	○	○	○	○

	#7	#6	#5	#4	#3	#2	#1	#0
G1020	○	○	○	○	○	○	○	○
:								
G1042	○	○	○	○	○	○	○	○
G1043	○	×	○	×	×	○	○	○
G1044	○	○	○	○	○	○	MLK	BDT1
G1045	BDT9	BDT8	BDT7	BDT6	BDT5	BDT4	BDT3	BDT2
G1046	DRN	KEY4	KEY3	KEY2	KEY1	○	SBK	○
G1047	○	○	○	○	○	○	○	○
:								
G1060	○	○	○	○	○	○	○	○
G1061	○	○	○	○	○	○	○	RGTA
G1062	○	○	○	○	○	○	○	○
:								
G1099	○	○	○	○	○	○	○	○
G1100	+J8	+J7	+J6	+J5	+J4	+J3	+J2	+J1
G1101	○	○	○	○	○	○	○	○
G1102	–J8	–J7	–J6	–J5	–J4	–J3	–J2	–J1
G1103	○	○	○	○	○	○	○	○
:								
G1105	○	○	○	○	○	○	○	○
G1106	MI8	MI7	MI6	MI5	MI4	MI3	MI2	SMI1
G1107	○	○	○	○	○	○	○	○
G1108	MLK8	MLK7	MLK6	MLK5	MLK4	MLK3	MLK2	MLK1
G1109	○	○	○	○	○	○	○	○
G1110	+LM8	+LM7	+LM6	+LM5	+LM4	+LM3	+LM2	+LM1
G1111	○	○	○	○	○	○	○	○
G1112	–LM8	–LM7	–LM6	–LM5	–LM4	–LM3	–LM2	–LM1
G1113	○	○	○	○	○	○	○	○
G1114	*+L8	*+L7	*+L6	*+L5	*+L4	*+L3	*+L2	*+L1
G1115	○	○	○	○	○	○	○	○

	#7	#6	#5	#4	#3	#2	#1	#0
G1116	*–L8	*–L7	*–L6	*–L5	*–L4	*–L3	*–L2	*–L1
G1117	○	○	○	○	○	○	○	○
G1118	*+ED8	*+ED7	*+ED6	*+ED5	*+ED4	*+ED3	*+ED2	*+ED1
G1119	○	○	○	○	○	○	○	○
G1120	*–ED8	*–ED7	*–ED6	*–ED5	*–ED4	*–ED3	*–ED2	*–ED1
G1121	○	○	○	○	○	○	○	○
:								
G1125	○	○	○	○	○	○	○	○
G1126	SVF8	SVF7	SVF6	SVF5	SVF4	SVF3	SVF2	SVF1
G1127	○	○	○	○	○	○	○	○
:								
G1129	○	○	○	○	○	○	○	○
G1130	*IT8	*IT7	*IT6	*IT5	*IT4	*IT3	*IT2	*IT1
G1131	○	○	○	○	○	○	○	○
G1132	○	○	○	○	+MIT4	+MIT3	+MIT2	+MIT1
G1133	○	○	○	○	○	○	○	○
G1134	○	○	○	○	–MIT4	–MIT3	–MIT2	–MIT1
G1135	○	○	○	○	○	○	○	○
:								
G1255	○	○	○	○	○	○	○	○

PMC→MT

	#7	#6	#5	#4	#3	#2	#1	#0
Y000	○	○	○	○	○	○	○	○
:								
Y127	○	○	○	○	○	○	○	○

CNC→PMC (Signals for the 1–path)

	#7	#6	#5	#4	#3	#2	#1	#0
F000	○	○	○	○	○	○	○	○
:								
F255	○	○	○	○	○	○	○	○

CNC→PMC (Signals for the 2–path)

	#7	#6	#5	#4	#3	#2	#1	#0
F1000	○	○	○	○	○	○	○	○
:								
F1255	○	○	○	○	○	○	○	○

1.6.4 Inputting and outputting the operation history data

Recorded data can be output to an input/output unit connected via a reader/punch interface. An output record can be input from the input/output unit.
Set the input/output unit to be used in setting parameters No. 0020 and 0100 to 0135.
To output the data, set a code in the ISO bit of a setting parameter (bit 1 of parameter No. 0020).

- **Output**

(1) Select EDIT mode.

(2) Press the [SYSTEM] key, then select the operation history display screen.

(3) Press the soft keys **[(OPE)]**, [▷], **[PUNCH]**, and **[EXEC]** in this order.

The data output to the FANUC Floppy Cassette or FANUC FA Card is stored under file name OPERATION HISTORY.

- **Input**

(1) Select EDIT mode.

(2) Press the [SYSTEM] key, then select the operation history display screen.

(3) Press the soft keys **[(OPE)]**, [▷], **[READ]**, and **[EXEC]** in this order.

- **Output data format**

1. MDI/soft key
2. Signal
3. Alarm
4. For extension (date or time)
5. MDI/soft key of path 2
6. Signal of path 2
7. Alarm of path 2

The header and recorded operation data are output, in this order. The operation history data is divided into four parts by identifier words. Data other than the identifier words depends on the type.

T(identifier word)

```
T0    : Header
T50   : MDI/soft key
T51   : Signal
T52   : Alarm
T53   : For extension (date or time)
T54   : MDI/soft key of path 2
T55   : Signal of path 2
T56   : Alarm of path 2
```

1 Header

	T	0	C	O	P	E	R	A	T	I	O	N

		H	I	S	T	O	R	Y	;	

C: Data word

2 MDI/soft key

	T	5	0	P	0 to 1	H	*	*	;

P0: Usually
P1: At power–on
H **: KCB code (See the following table.)

3 Signal

	T	5	1	P	0 to 6	N	0 to 255	H	*	*	,	*	*	;

New data Old data

P0: X0000 and above
P2: G0000 and above
P4: Y0000 and above
P6: F0000 and above
N***: DI/DO number
H **: Signal information data (hexadecimal)

4 Alarm

	T	5	2	P	0 to 10	N	*	*	*	*	;	

P0: P/S No. 100
P1: P/S No. 000
P2: P/S No. 101
P3: P/S No. 0001 to 254
P4: Overtravel alarm
P5: Overheat alarm
P6: Servo alarm
P7: System alarm
P8: APC alarm
P9: Spindle alarm
P10: P/S alarm No. 5000 to 5999
P15: External alarm
N****: Alarm number (for P/S alarm, system alarm, and external alarm only)

5 For extension (date or time)

Date

	T	5	3	P	0 to 1	E	0	D	*	*	*	*	*	*	*	*	;	

Time

	T	5	3	P	0 to 1	E	1	D	*	*	*	*	*	*	;	

P0: Usually
P1: At power–on
E0: Date
E1: Time
D*..*: Data Example) October 29, 1992

	D	1	9	9	2	1	0	2	9	

6 MDI/soft key of path 2

	T	5	4	P	0 to 1	H	*	*	;	

P0: Usually

P1: At power–on

H **: KCB code (See the following table.)

7 Signal of path 2

	T	5	5	P	2, 6	N	1000 to 1255		H	*	*	,	*	*	;	

New data Old data

P2: G1000 and above

P6: F1000 and above

N***: DI/DO number

H **: Signal information data (hexadecimal)

8 Alarm of path 2

	T	5	6	P	0 to 10	N	*	*	*	*	;	

P0: P/S No. 100

P1: P/S No. 000

P2: P/S No. 101

P3: P/S No. 0001 to 254

P4: Overtravel alarm

P5: Overheat alarm

P6: Servo alarm

P7: System alarm

P8: APC alarm

P9: Spindle alarm

P10: P/S alarm No. 5000 to 5999

P15: External alarm

N****: Alarm number (for P/S alarm, system alarm, and external alarm only)

KCB codes (MDI/soft key)
(00H to 7FH)

	0	1	2	3	4	5	6	7
0			Space	0	@	P		
1			!	1	A	Q		
2			”	2	B	R		
3			#	3	C	S		
4			$	4	D	T		
5			%	5	E	U		
6			&	6	F	V		
7			’	7	G	W		
8			(	8	H	X		
9			)	9	I	Y		
A	; (EOB)		*	:	J	Z		
B			+		K	[		
C			’	<	L	o		
D			–	=	M	]		
E			.	>	N			
F			/	?	O	–		

(80H to FFH)

	8	9	A	B	C	D	E	F
0		Reset *						F0 *
1		MMC *						F1 *
2		CNC *						F2 *
3								F3 *
4	Shift	Insert *						F4 *
5		Delete *						F5 *
6	CAN	Alter *						F6 *
7								F7 *
8	Cur→ *	Input *					Positn *	F8 *
9	Cur← *						Progrm *	F9 *
A	Cur↓ *	Help *					Offset *	
B	Cur↑ *						System *	
C							Messeg *	
D							Grp/Cs *1*	
E	Page↓ *						Custom *	FR *
F	Page↑ *						Fapt *	FL *

*1:On the small–sized keypad, ED corresponds to the Graph/Custom key. On a standard keyboard, ED corresponds to the Graph key and EE to the Custom key.

* : Command key

1.6.5 Notes

(1) While the operation history screen is displayed, no information can be recorded to the history.

(2) An input signal having an on/off width of up to 16 msec is not recorded in the history. Some signals are not recorded in the history. See Appendix 1.

(3) Once the storage becomes full, old data is deleted, starting from the oldest record. Up to about 8000 key information items can be recorded.

(4) The recorded data is retained even after the power is turned off. A memory all clear operation, however, erases the recorded data.

(5) The operation history function cannot execute sampling when the OHS bit (bit 7 of parameter No. 3106) is set to 1.

(6) Set the date and time on the setting screen.

(7) The time needed to input and output 6000 operation records at a rate of 4800 baud is as follows:

Output: About 5 minutes
Input: About 2 minutes and 30 seconds

This file corresponds to a paper tape of about 180 m in length.

1.7 HELP FUNCTION

1.7.1 General

The help function displays alarm information, operation method and a table of contents for parameters. This function is used as a handbook.

1.7.2 Display Method

Press HELP key on any screen other than PMC screen, then a help screen appears.
(However, it is not available when PMC screen is displaying)

- **Display of help screen**

```
HELP (INITIAL MENU)              O1234 N12345

              *****   HELP   *****
            1. ALARM DETAIL
            2. OPERATION METHOD
            3. PARAMETER TABLE









[1 ALAM]  [2 OPE]  [3 PARA]  [     ]  [     ]
```

- **Help for alarm**

1 When an alarm is generated, press soft key **[1 ALAM]**, then a help message of the alarm is displayed.

```
HELP (INITIAL MENU)              O1234 N12345

NUMBER     : 010
M'SAGE  : IMPROPER G CODE
FUNCTION  :
ALARM  :
  A G CODE NOT LISTED IN G–CODE TABLE
  IS BEING COMMANDED
  ALSO G–CODE FOR FUNCTION NOT ADDED
  IS BEING COMMANDED




[1  ALAM]  [2 OPE]  [3 PARA] [     ] [ OPRT ]
```

2 Pressing soft key **[OPRT]**,(alarm No.), and soft key **[SELECT]** in this order, a help message corresponding to the input alarm number is displayed.

- **Help for operation**

1 Press **[2 OPR]**, then a menu for operation method is displayed.

```
HELP (OPERATION METHOD)          O1234 N12345

1. PROGRAM EDIT
2. SEARCH
3. RESET
4. DATA INPUT WITH MDI
5. DATA INPUT WITH TAPE
6. OUTPUT
7. INPUT WITH FANUC CASSETTE
8. OUTPUT WITH FANUC CASSETTE
9. MEMORY CLEAR




[1 ALARM]  [2 OPR]  [3 PARA]  [ OPRT ]
```

2 Press **[OPRT]**, (an item number) and soft key **[SELECT]**, then an operation method of the item is displayed.

Pressing PAGE key or displays another pages.

```
HELP (OPERATION METHOD)          O1234 N12345
<<1.PROGRAM EDIT>>                    1/4  ← Current page/ Total page
DELETE ALL PROGRAMS
  MODE :EDIT
  SCREEN :PROGRAM
  OPR  :(0–9999) – (DELETE)

DELETE ONE PROGRAM
  MODE : EDIT
  SCREEN : PROGRAM
  OPR  :(0+PROGRAM NUMBER) – <DELETE>




[    ]  [    ]  [    ]  [    ]  [SELECT]
```

- **Parameter table**

Press soft key **[3 PARA]**, then a parameter table is displayed.

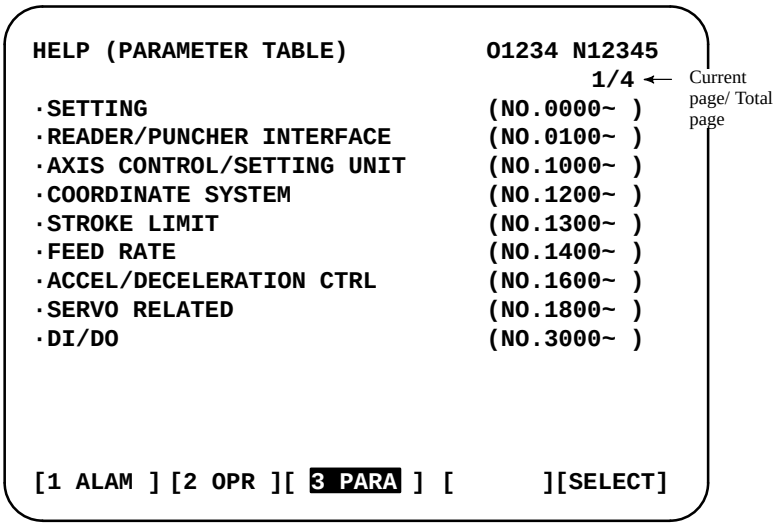

Another screen can be selected by the PAGE key or .

1.8 DISPLAYING DIAGNOSTIC PAGE

1.8.1 Displaying Diagnostic Page

(1) Press SYSTEM key.

(2) Press soft key **[DGN]**, then a diagnostic screen is displayed.

1.8.2 Contents Displayed

- **Causes when the machine does not travel in spite of giving a command**

000 WAITING FOR FIN SIGNAL	An auxiliary function is being executed.
001 MOTION	Travel command of cycle operation is being executed.
002 DWELL	DWELL Dwell is being executed.
003 IN–POSITION CHECK	In–position check is being done.
004 FEEDRATE OVERRIDE 0%	Feedrate override is 0%.
005 INTERLOCK/START LOCK	Interlock or start lock is input.
006 SPINDLE SPEED ARRIVAL CHECK	Waiting for spindle speed arrival signal.
010 PUNCHING	Data is being output through reader/puncher interface.
011 READING	Data is being input through reader/puncher interface.
012 WAITING FOR (UN) CLAMP	Waiting for the end of index table indexing
013 JOG FEEDRATE OVERRIDE 0%	Manual feedrate override is 0%.
014 WAITING FOR RESET, ESP,RRW OFF	NC is in reset state.
015 EXTERNAL PROGRAM NUMBER SEARCH	External Program Number Search External program number search is being done
016 BACKGROUND ACTIVE	Background is being used.

- **Cause of the cycle start LED turned off**

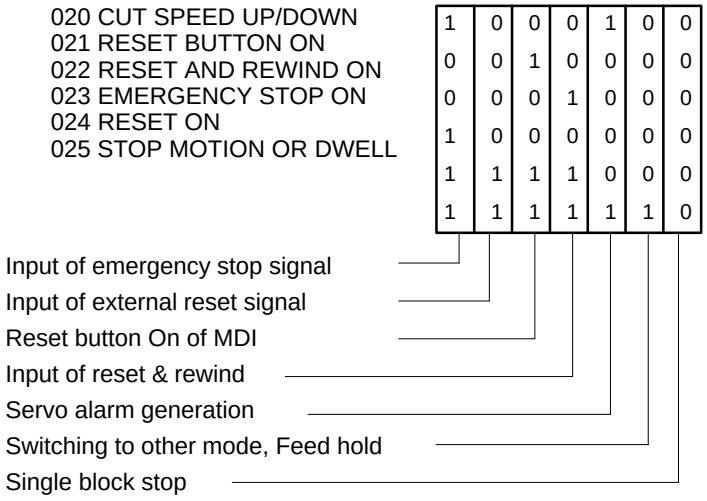

- **State of TH alarm**

030 CHARACTER NUMBER TH ALARM	Position of the character that caused TH alarm. The position is counted from the head.
031 TH DATA	Data of the character that caused TH alarm.

- **Detail of Alarm 350 of serial pulse coder**

		#7	#6	#5	#4	#3	#2	#1	#0
DGN	0202		CSA	BLA	PHA	RCA	BZA	CKA	SPH

#6(CSA): Hardware of serial pulse coder is abnormal

#5(BLA): Battery voltage is low (warning)

#4(PHA): Serial pulse coder or feedback cable is erroneous.

#3(RCA): Serial pulse coder is faulty.
Counting of feedback cable is erroneous.

#2(BZA): Battery voltage became 0.
Replace the battery and set the reference position.

#1(CKA): Serial pulse coder is faulty.
Internal block stopped.

#0(SPH): Serial pulse coder or feedback cable is faulty.
Counting of feedback cable is erroneous.

- **Detail of Alarm 351 of serial pulse coder**

		#7	#6	#5	#4	#3	#2	#1	#0
DGN	0203	DTE	CRC	STB					

#7(DTE): Communication failure of serial pulse coder.
There is no response for communication.

#6(CRC): Communication failure of serial pulse coder.
Transferred data is erroneous.

#5(STB): Communication failure of serial pulse coder.
Transferred data is erroneous.

- **Details of digital servo alarm 414**

	#7	#6	#5	#4	#3	#2	#1	#0
DGN 0200	OVL	LV	OVC	HCA	HVA	DCA	FBA	OFA

#7(OVL): Overload alarm

#6(LV): Insufficient voltage alarm

#5(OVC): Over current alarm

#4(HCA): Abnormal current alarm

#3(HVA): Overvoltage alarm

#2(DCA): Discharge alarm

#1(FBA): Disconnection alarm

#0(OFA): Overflow alarm

	#7	#6	#5	#4	#3	#2	#1	#0
DGN 0201	ALD			EXP				

Overload alarm	0	–	–	–	Motor overheat
	1	–	–	–	Amplifier overheat
Disconnection alarm	1	–	–	0	Built–in pulse coder (hand)
	1	–	–	1	Disconnection of separated type pulse coder (hard)
	0	–	–	0	Disconnection of pulse coder (software)

	#7	#6	#5	#4	#3	#2	#1	#0
DGN 0204	RAM	OFS	MCC	LDA	PMS			

#6(OFS): Abnormal current value result of A/D conversion of digital

#5(MCC): Contacts of MCC of servo amplifier is melted.

#4(LDA): Serial pulse coder LED is abnormal

#3(PMS): Feedback is not correct due to faulty serial pulse coder C or feedback cable.

- **Detail of digital servo alarm 417**

This data indicates the cause of servo alarm No. 417, detected by the NC. If the alarm is detected by the servo, the PRM bit (bit 4 of DGN No. 0203) is set to 1.

	#7	#6	#5	#4	#3	#2	#1	#0
0280		AXS		DIR	PLS	PLC		MOT

#0 (MOT): The motor type specified in parameter No. 2020 falls outside the predetermined range.

#2 (PLC): The number of velocity feedback pulses per motor revolution, specified in parameter No. 2023, is zero or less. The value is invalid.

#3 (PLS): The number of position feedback pulses per motor revolution, specified in parameter No. 2024, is zero or less. The value is invalid.

#4 (DIR): The wrong direction of rotation for the motor is specified in parameter No. 2022 (the value is other than 111 or –111).

#6 (AXS): In parameter No. 1023 (servo axis number), a value that falls outside the range of 1 to the number of controlled axes is specified. (For example, 4 is specified instead of 3.) Alternatively, the values specified in the parameter are not consecutive.

- **Position error amount**

DGN	0300	Position error of an axis in detection unit

$$\text{Position error} = \frac{\text{Feed rate [mm/min]}}{60 \times \text{servo loop gain [1/sec]}} \times \frac{1}{\text{Detection unit}}$$

- **Machine position**

DGN	0301	Distance from reference position of an axis in detection unit

- **Reference position shift function**

DGN	302	Distance from the end of the deceleration dog to the first grid point

[Data type] Two–word axis

[Units of data] 0.001 mm (metric output), 0.0001 inch (inch output)

[Valid data range] 0 to ±99999999

- **Diagnostic data related to the Inductosyn absolute position detector**

DGN	380	Difference between the absolute position of the motor and offset data

$$\frac{\text{M (absolute position of the motor)} - \text{S (offset data)}}{\lambda\text{(pitch interval)}}$$

The remainder resulting from the division is displayed.

[Data type] Two–word axis

[Units of data] Detection units

DGN	381	Offset data from the Inductosyn

Off set data is displayed when CNC calculates the machine position.

[Data type] Two–word axis

[Units of data] Detection units

- **Serial spindle**

		#7	#6	#5	#4	#3	#2	#1	#0
DGN	0400				SAI	SS2	SSR	POS	SIC

This data indicates the offset data received by the CNC while it is calculating the machine coordinates.

#4(SAI) 0 : Spindle analog control is not used.
1 : Spindle analog control is used.

#3(SS2) 0 : Spindle serial doesn’t control 2nd spindle.
1 : Spindle serial control 2nd spindle.

#2(SSR) 0 : Spindle serial control is not performed.
1 : Spindle serial control is performed.

#1 (POS) A module required for spindle analog control is
0 : not mounted
1 : mounted

#0 (SIC) A module required for spindle serial control is
0 : not mounted
1 : mounted

DGN	0401	Serial spindle alarm state of 1st spindle
DGN	0402	Serial spindle alarm state of 2nd spindle

		#7	#6	#5	#4	#3	#2	#1	#0
DGN	0408	SSA		SCA	CME	CER	SNE	FRE	CRE

#0 (CRE): A CRC error occurred. (Warning)

#1 (FRE): A framing error occurred. (Warning)

#2 (SNE): The transmission/reception target is invalid.

#3 (CER): An error occurred during reception.

#4 (CME): No response was returned during automatic scanning.

#5 (SCA): A communication alarm occurred on the spindle amplifier side.

#7 (SSA): A system alarm occurred on the spindle amplifier side.
(These problems cause spindle alarm 749. Such problems are mainly caused by noise, disconnection, or instantaneous power–off).

		#7	#6	#5	#4	#3	#2	#1	#0
DGN	0409					SPE	S2E	S1E	SHE

Refer to this diagnosis when alarm 750 has generated.

#3 (SPE) In spindle serial control serial spindle parameters
0 : Satisfy start condition of spindle unit
1 : Do not satisfy start condition of spindle unit

#2 (S2E) 0 : 2nd spindle started normally in spindle serial control.
1 : 2nd spindle did not start normally in spindle serial control.

#1 (S1E) 0 : 1st spindle started normally in spindle serial control.
1 : 1st spindle did not start normally in spindle serial control.

#0 (SHE) 0 : Serial communication module is correct on CNC side.
1 : An error occurred in serial communication module on CNC side

DGN	0410	Load meter of 1st spindle [%]
DGN	0411	Speed meter of 1st spindle [%]
DGN	0412	Load meter of 2nd spindle [%]

DGN	0413	Speed meter of 2nd spindle [%]
DGN	0414	Position error in 1st spindle synchronous control mode
DGN	0415	Position error in 2nd spindle synchronous control mode
DGN	0416	Absolute value of synchronization error between 1st and 2nd spindles
DGN	0417	Feedback information of 1st spindle position coder
DGN	0418	Position error of 1st spindle position loop mode
DGN	0419	Feedback information of 2nd spindle position coder
DGN	0420	Feedback information of 2nd spindle position coder

- **Diagnostic data related to rigid tapping**

DGN	450	Spindle position error during rigid tapping

[Data type] Word

[Unit of data] Detection units

DGN	451	Spindle distribution during rigid tapping

[Data type] Word

[Unit of data] Detection units

DGN	454	Accumulated spindle distribution during rigid tapping

[Data type] Two–word

[Unit of data] Detection units

DGN	455	Instantaneous difference for the move command, calculated in terms of the spindle, during rigid tapping (signed, accumulated value)

[Data type] Two–word

[Unit of data] Detection units

DGN	456	Instantaneous difference for the travel error, calculated in terms of the spindle, during rigid tapping (signed)

[Data type] Word

[Unit of data] Detection units

DGN	457	Width of synchronization error during rigid tapping (maximum value)

[Data type] Word

[Unit of data] Detection units

- **Two–spindle polygon machining (T series only)**

This data indicates the status of the polygon synchronization mode.

	#7	#6	#5	#4	#3	#2	#1	#0
470	SC0	LGE		SCF			PST	SPL

#0 (SPL): Spindle polygon synchronization is in progress.

#1 (PST): Spindle polygon synchronization mode is starting.

#2: Spindle polygon synchronization mode is being released.

#3: The spindle speed is being changed in spindle polygon synchronization mode.

#4 (SCF): The spindle speed has been changed in spindle polygon synchronization mode.

#5: Not used

#6 (LGE): In spindle polygon synchronization mode, the two spindles have different loop gains.

#7 (SC0): In spindle polygon synchronization mode, the specified speed is zero.

<Note>

- If SPL and SCF are set to 1 and #1, #2, and #3 are set to 0 in polygon synchronization mode, the operation is normal.
- If the status does not change, even though PST is set to 1 and the program is stopped in a block including G51.2, one of the spindles cannot attain the polygon synchronization speed. This may occur when the spindle cannot be activated because the PSTU bit (bit 7 of parameter No. 7603) is set to 0.
- LGE is set to 1 when the speed is changed in polygon synchronization mode if the serial spindle control unit uses different loop gains for the first and second spindles during spindle synchronization.
  When this function is used, the two spindles must be controlled with an identical loop gain. The warning is displayed in DGN, but the warning does not cause an alarm. (The serial spindle control unit switches parameters according to the statuses of CTH1, CTH2, and other signals.)
- SCO is set to 1 if either of the following occurs: The combination of the programmed S value and spindle control signals including *SSTP <G0029, #6>, SOV0 to SOV7 <G0030> and multispindle control signal <G0027> causes 0 or a value smaller than the resolution of spindle control to be programmed (the programmed value multiplied by 4095/highest–spindle–speed is smaller than 1). Alternatively, SIND control <G0032, G0033> is used and the programmed output is 0.
  When SCO is set to 1, the spindle speed becomes 0, setting bit 0 of DGN 471 to 1 and disabling the ratio of polygon synchronization rotation. This, however, is handled as a result of the program, and does not cause P/S alarm No. 5018.

This data indicates the cause of P/S alarm 5018 or 218.

	#7	#6	#5	#4	#3	#2	#1	#0
471	NPQ	PQE		NSP	SUO	QCL	PCL	

#0 to #3 →Cause of P/S alarm No. 5018
P/S alarm No. 5018 can be cleared by issuing a reset. The cause indication is retained until the cause is removed or until polygon synchronization mode is released.

#4 to #7 →Cause of P/S alarm No. 218
If P/S alarm No. 218 occurs, polygon synchronization mode is released. The cause indication, however, is retained until P/S alarm No. 218 is cleared by issuing a reset.

#0: The speed specified for spindle polygon synchronization is too low. (The unit speed becomes 0 for internal operations.)

#1 (PCL): The first spindle (master axis in polygon synchronization) is clamped.

#2 (QCL): The second spindle (slave axis in polygon synchronization) is clamped.

#3 (SUO): The speed specified in spindle polygon synchronization is too high. (The speed is restricted to the upper limit for internal operations.)

#4 (NSP): A spindle required for control is not connected. (The serial spindle, second spindle, etc. is not connected.)

#5: A negative Q value is specified while the QDRC bit (bit 1 of parameter No. 7603) is set to 1.

#6 (PQE): The P value or Q value, specified with G51.2, falls outside the predetermined range. Alternatively, the P and Q values are not specified as a pair.

#7 (NPQ): Although the P and Q values are not specified with G51.2, an R value is specified. Alternatively, none of the P, Q, or R value is specified.

<Note>

- Bit 0 is set to 1 even when the specified spindle speed is 0 (bit 7 of DGN 470 is set to 1). This, however, does not cause P/S alarm No. 5018 to be output (because the programmed speed is 0). P/S alarm No. 5018 occurs when bit 7 of DGN 470 is set to 0, while bit 0 of DGN 471 is set to 1. Normal spindle speeds will not cause this alarm to be output.
- PCL indicates that the speed specified for the master axis exceeds the maximum speed for the first axis, specified in parameters No. 3741 to 3744, causing, the specified speed to be limited to the maximum speed. PCL is not set to 1 provided the first spindle is connected correctly.
- QCL is set to 1 when the polygon synchronization speed specified for the second spindle (slave axis in polygon synchronization) exceeds the value set in parameter No. 7621, causing the actual speed to be limited to the specified value.
- SUO occurs if the number of distributed pulses for ITP exceeds 32767, that is, if the speed specified for the first axis, divided by the specified P value, exceeds 59998. In other words, SUO occurs when a speed in excess of 59998 rpm is specified for the first axis if P is set to 1.

The specified synchronization mode status is displayed.

DGN 474 Rotation ratio of the master axis in spindle polygon synchronization (specified P value)

In spindle polygon synchronization mode, the rotation ratio (specified P value) of the current master axis (first spindle) is displayed.

DGN 475 Rotation ratio of the slave axis in spindle polygon synchronization (specified Q value)

In spindle polygon synchronization mode, the rotation ratio (specified Q value) of the current slave axis (second axis) is displayed.

DGN 476 Phase difference between two spindles in spindle polygon synchronization (specified R value)

In spindle polygon synchronization mode, the current phase difference (specified R value) is displayed.(The units are the minimum input increment for the rotation axis of the machine.)

If the RDGN bit (bit 5 of parameter 7603) is set to 1, the shift amount specified for the serial spindle (number of specified pulses, calculated at a rate of 4096 pulses per 360 degrees) is displayed.

This diagnostic data indicates the actual speed of each spindle in synchronization mode.

DGN 477 Actual speed of the master axis for spindle polygon synchronization (rpm)

In spindle polygon synchronization mode, the actual speed of the master axis (first spindle) is displayed.

DGN 478 Actual speed of the slave axis in spindle polygon synchronization (rpm)

In spindle polygon synchronization mode, the actual speed of the slave axis (second spindle) is displayed.

<Note> The values of DGN 477 and DGN 478 are displayed without being sampled. The displayed values may vary from the actual values. Use these values for guidance only.

- **State of remote buffer (protocol A)**

DGN 0500 Send command

1: SYN 2: RDY 3: RST 4: ALM
5: SAT 6: GTD 7: RTY 8: SDI

DGN 0501 Receive command

1: SYN 2: RDY 3: ARS 4: AAL
5: CLB 6: SET 7: DAT 8: EOD
9: WAT 10: RTY 11:RDI 12: SDO

DGN 0502 State of remote buffer

0 : Not ready
1 : Reset state
2 : Operation state
3 : Alarm state
4 : Circuit disconnection

- **Diagnostic data related to MMC–IV**

DGN 510

#7	#6	#5	#4	#3	#2	#1	#0

This data indicates the internal MMC–IV information (not available to general users).

DGN 511

#7	#6	#5	#4	#3	#2	#1	#0

This data indicates the internal MMC–IV information (not available to general users).

DGN 512

#7	#6	#5	#4	#3	#2	#1	#0
PA1	PA0	BNK		THH	THL		PRA

This data indicates the cause of a system alarm that has occurred in MMC–IV.

#0(PRA) 1 : A RAM parity error occurred in shared RAM.

#2(THL) 0 : The temperature of the MMC board is too low.
1 : Normal

#3(THH) 0 : The temperature of the MMC board is too high.
1 : Normal

#4 0 : Normal
1 : An NMI has occurred on the MMC board.

#5(BNK) If bit 0 (PRA) is set to 1,
0 : An alarm occurred in the lower half of shared RAM.
1 : An alarm occurred in the upper half of shared RAM.

#6 (PA0) If bit 0 (PRA) is set to 1,
1 : An alarm occurred at an even–numbered address.

#7 (PA1) If bit 0 (PRA) is set to 1,
1 : An alarm occurred at an odd–numbered address.

		#7	#6	#5	#4	#3	#2	#1	#0
DGN	513								

This data indicates the internal MMC–IV information.

#4 For the VIDEO signal,

1 : The CNC/PMC screen is selected.
0 : The MMC screen is selected.

- **Diagnostic data related to a small–diameter peck drilling cycle (M series only)**

DGN	520	Total number of retractions during cutting after G83 is specified

Executing the G83 command clears the value to zero.

DGN	521	Total number of retractions made by receiving the overload signal during cutting after G83 is specified

Executing the G83 command clears the value to zero.

DGN	522	Position on the drill axis from which retraction is started

The units are the same as the minimum input increment.

DGN	523	Difference between the position on the drill axis from which the previous retraction was started and the position from which the current retraction is started

The units are the same as the minimum input increment.

- **Diagnostic data related to ATC for FD Alpha**

		#7	#6	#5	#4	#3	#2	#1	#0
DGN	530			A99	A98	A97	A96	A95	A43

* Check the contents of this data if alarm 251 is output.

#5 (A99): A pry alarm occurred while the tool was being changed.

#4 (A98): After the power was turned on or after an emergency stop was released, M06 was specified before the first reference position return. While the tool was being changed, machine lock was enabled for the Z–axis.

#3 (A97): M06 is specified in canned cycle mode. M06 is specified in a block containing the command instructing reference position return. M06 is specified in tool compensation mode.

#2 (A96): The current tool number parameter (parameter No. 7810) is set to 0.

#1 (A95): M06 is specified while the Z–axis machine coordinate is positive.

#0 (A43): A prohibited T code is specified after M06.

		#7	#6	#5	#4	#3	#2	#1	#0
DGN	531		585	584	583	582	581	580	502

#6 (585): Spindle servo alarm (excessive error during ATC magazine indexing)

#5 (584): Invalid sequence during positioning and ATC (system error)

#4 (583): Spindle servo alarm (LSI overflow)

#3 (582): Spindle servo alarm (excessive drift)

#2 (581): Spindle servo alarm (excessive error during travel)

#1 (580): Spindle servo alarm (excessive error in the stop state)

#0 (502): Large spindle distribution (system error)

- **Diagnostic data related to simple synchronous control**

DGN	540	Difference between position errors of the master axis and slave axis under simple synchronous control

* M series only

The units are the same as the detection units.

- **Diagnostic data related to the dual position feedback function**

0550	Closed loop error

[Data type] 2–word axis

[Unit of data] Detection units

[Valid data range] –99999999 to +99999999

0551	Semi–closed loop error

[Data type] 2–word axis

[Unit of data] Detection units

[Valid data range] –99999999 to +99999999

0552	Error between semi–closed and closed loops

[Data type] word axis

[Unit of data] Detection units

[Valid data range] –32768 to +32767

0553	Amount of dual position compensation

[Data type] 2–word axis

[Unit of data] Detection units

[Valid data range] –99999999 to +99999999

The data items displayed on the diagnosis screen are obtained at the following positions:

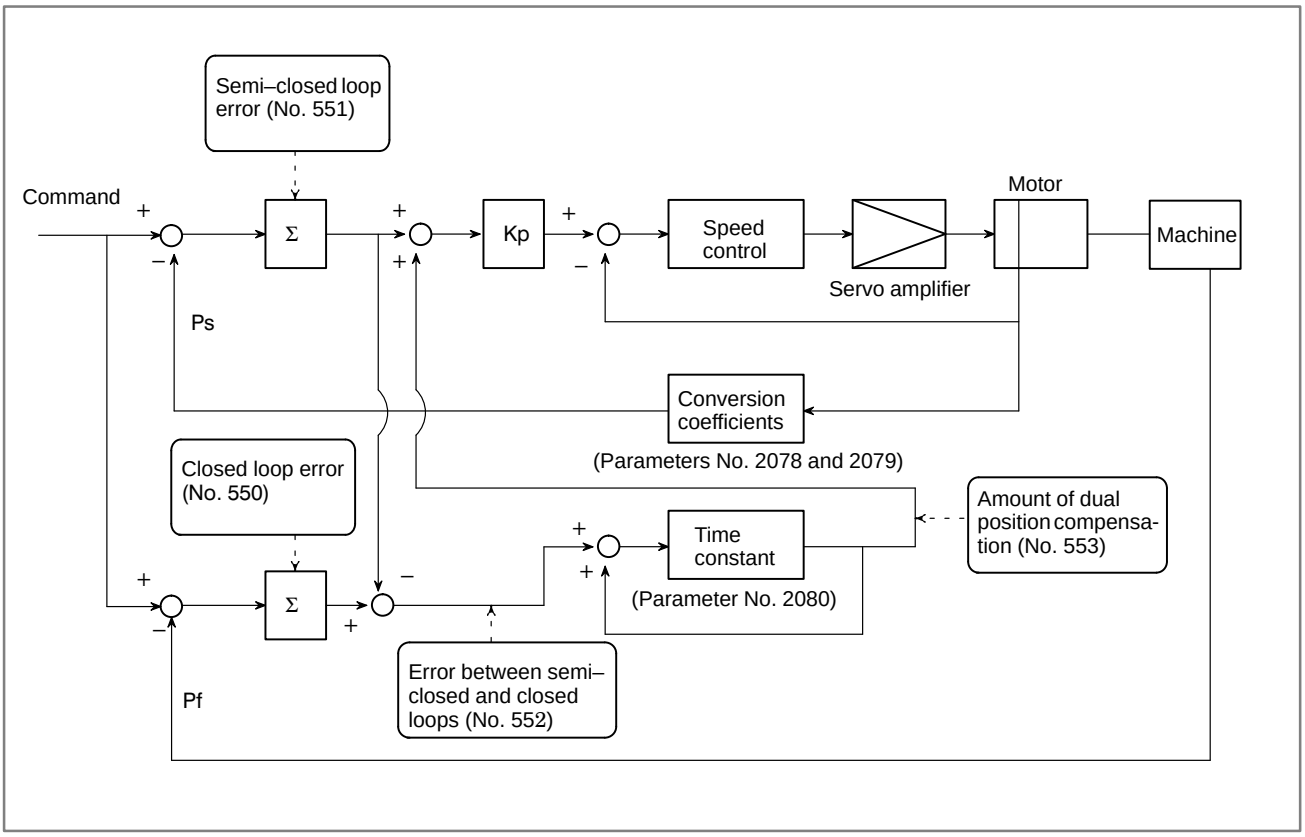

1.9
NC STATE DISPLAY

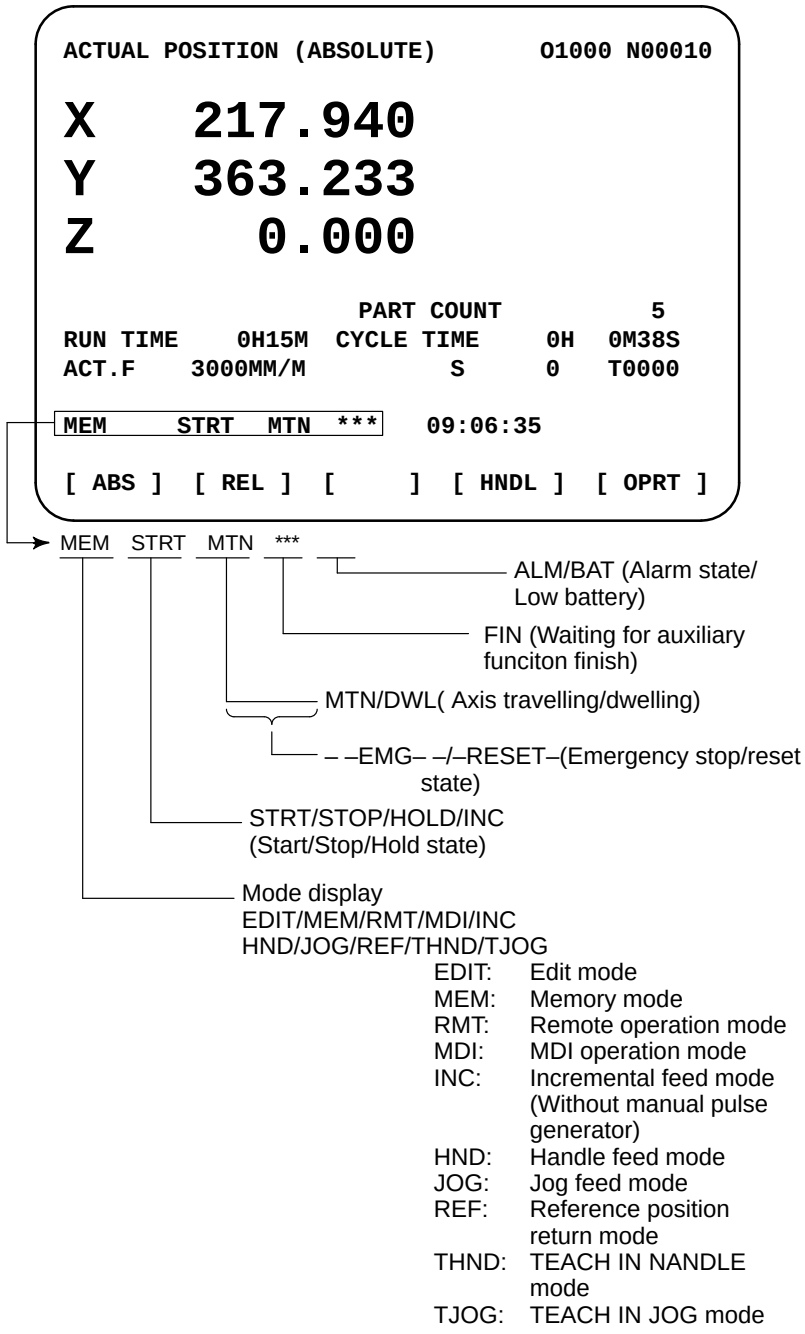

1.10 WAVE FORM DIAGNOSTIC FUNCTION

Tuning becomes easier by graphically displaying servo error amount and torque command, etc. (Graphic option is required).

The following two types of waveform diagnosis functions are supported:

(1) One–shot type

The one–shot type waveform diagnosis function can graphically display, as a waveform, any variation in those data items listed below. The start of data sampling can be triggered by the rising or falling edge of a machine signal. This function facilitates the adjustment of the servo and spindle motors.

a. Error, pulse distribution amount, torque, speed, current, and thermal simulation data for the servo motor of each axis
b. Composite speed for the first, second, and third axes
c. Spindle motor speed and load meter value
d. On/off state of a machine signal specified with a signal address

(2) Storage type

The storage type waveform diagnosis function enables the storing of any variation in the data items listed below and, if a servo alarm occurs, the graphical display (as a waveform) of the stored data. The end of data sampling can be triggered by the rising or falling edge of a machine signal. This function facilitates the estimation of erroneous locations. Stored data can be output via the reader/punch interface.

a. Error, pulse distribution amount, torque, speed, current, and thermal simulation data for the servo motor for each axis

Notes
1 To output stored waveform data, the optional reader/punch interface must have been installed.
2 The waveform diagnosis function is enabled when bit 0 (SGD) of parameter No. 3112 is set to 1. Note, however, that a graphics board is necessary to display waveforms.

1.10.1 Setting Parameters

(1) Set a parameter to utilize the servo waveform diagnostic function.

	#7	#6	#5	#4	#3	#2	#1	#0
3112								SGD

#0(SGD) 0 : Do not display servo waveform (usual graphic display).
1 : Displays servo waveform (usual graphic display function cannot be used.

(2) Turn off the power once and turn it on again.

3120	Time between servo alarm and sampling stop (storage type)

[Data type] Word

[Unit of data] ms

[Valid data range] 1 to 32760

1.10.2 Waveform Diagnostic Parameter Screen

1. Press the [SYSTEM] key to display a system screen such as aparameter.
2. Press the next menu key [▷] several times, and the soft key **[W.DGNS]** is displayed.
3. Press **[W.DGNS]**, then the parameter screen for the waveform diagnosis is displayed.

Set the necessary data items. Position the cursor to the item to be set, enter the corresponding data, then press [INPUT]. Data items for which ***** is displayed cannot be set. To assist in data setting, the frame on the right side of the screen displays help information for that data to which the cursor is positioned. Help information which cannot fit into a single frame is split into several pages, which the user can scroll through using the page keys [↑] and [↓].

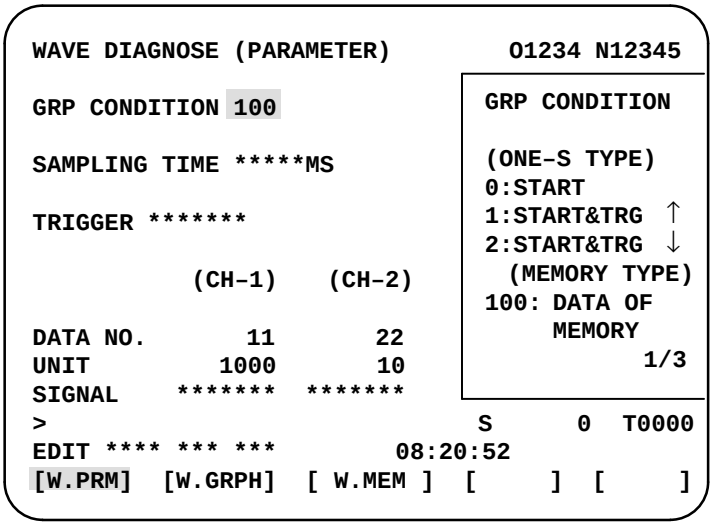

- **Waveform diagnosis parameters (one–shot type)**

(1) Display start condition

0 : Starts data sampling upon the **[START]** key being pressed, samples data for the specified period, then draws a waveform.

1 : Starts data sampling upon the detection of the first rising edge of the trigger signal after the **[START]** key is pressed, samples data for the specified period, then draws a waveform.

2 : Starts data sampling upon the detection of the first falling edge of the trigger signal after the [**START**] key is pressed, samples data for the specified period, then draws a waveform.

(2) Sampling period: Set the period during which data will be sampled.

Valid data range: 10 to 32760
Units: ms

(3) Trigger: Set the PMC address and bit for the signal used to trigger the start of data sampling, when 1 or 2 is set for the start condition.

Example) G0007.2: ST signal

(4) Data number: The table below lists the numbers of the data items for which a waveform can be displayed (n = 1 to 8).

Data No.	Description	Units
00	Does not display a waveform.	–
0n	Servo error (8 ms) for the n–th axis (positional deviation)	Pulses (detection units)
1n	Pulse distribution for the n–th axis (move command)	Pulses (input increments)
2n	Torque for the n–th axis (actual current)	% (relative to maximum current)
3n	Servo error (2 ms) for the n–th axis (positional deviation)	Pulses (detection units)
5n	Actual speed for the n–th axis	RPM
6n	Command current for the n–th axis	% (relative to maximum current)
7n	Thermal simulation data for the n–th axis	% (OVC alarm ratio)
90	Composite speed for the first, second, and third axes	Pulses (input increments)
99	On/off state of a machine signal specified with a signal address	None
10n	Actual spindle speed for the n–th axis	% (relative to maximum rotation speed)
11n	Load meter for the spindle for the n–th axis	% (relative to maximum output)

(5) Data units: Weight of data when 1 is specified. The data units are automatically specified for each data item and need not be set unless the units must be changed for some reason.

[Valid data range] 1 to 1000

[Unit] 0.001

(6) Signal address: PMC address and bit number. Set in the same way as that for trigger, when the data number is 99.

- **Waveform diagnosis parameters (storage type)**

(1) Display start condition

100 : Draws a waveform for the stored data.

(2) Sampling period: Invalid

(3) Trigger: Invalid

(4) Data number: The table below lists the numbers of the data items for which a waveform can be displayed (n = 1 to 8). Numbers for which no data is stored cannot be specified.

Data No.	Description	Units
00	Does not display a waveform.	–
0n	Servo error (8 ms) for the n–th axis (positional deviation)	Pulses (detection units)
1n	Pulse distribution for the n–th axis (move command)	Pulses (input increments)
2n	Torque for the n–th axis (actual current)	% (relative to maximum current)
5n	Actual speed for the n–th axis	RPM
6n	Command current for the n–th axis	% (relative to maximum current)
7n	Thermal simulation data for the n–th axis	% (OVC alarm ratio)

(5) Data units: Weight of data when 1 is specified. The data units are automatically specified for each data item and need not be set unless the units must be changed for some reason.

[Valid data range] 1 to 1000

[Unit] 0.001

(6) Signal address: Invalid

1.10.3 Graphic of Wave Diagnosis data

1. Press soft key **[W.GRPH]**, then graph of waveform diagnosis is displayed.

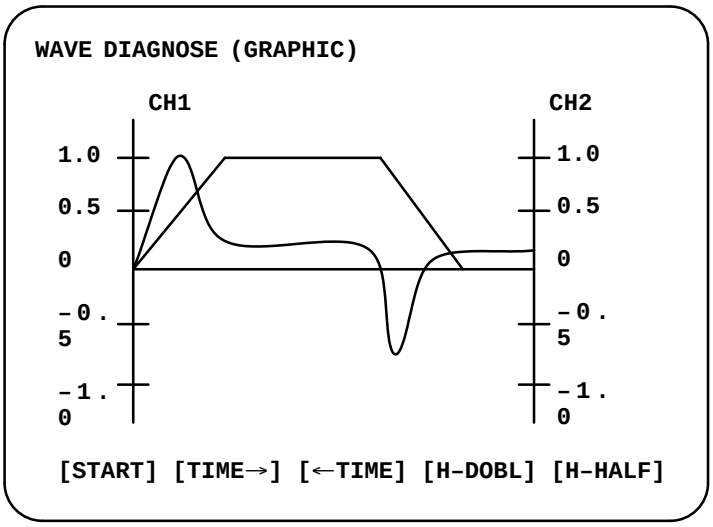

2. Press soft key **[(OPRT)]**, then the following soft keys are displayed. The following three sets of soft keys are displayed by the ▷ key.

[START] [TIME→] [←TIME] [H–DOBL] [H–DOBL]

[START] [CH–1↑] [CH–1↓] [V–DOBL] [V–HALF]

[START] [CH–2↑] [CH–2↓] [V–DOBL] [V–HALF]

1 **[START]** :Starts Graphic data
2 **[TIME→]** :Shift the waveform of channel 1 and 2 rightward
3 **[←TIME]** : Shift the waveform of channel and 2 leftward
4 **[H–DOBL]** :Double the time scale of the waveform of channel 1 and 2
5 **[H–HALF]** :Half the time scale of the waveform of channel 1 and 2
6 **[H–DOBL]** :Double the height of waveform of channel 1 and 2
7 **[V–HALF]** :Half the height of waveform of channel 1 and 2
8 **[CH–1↑]** : Shift the zero point of channel 1 upward
9 **[CH–1↓]** : Shift the zero point of channel 1 downward
10 **[CH–2↑]** : Shift the zero point of channel 2 upward
11 **[CH–2↓]** : Shift the zero point of channel 2 downward

- **Drawing a waveform for one–shot type waveform diagnosis**

The one–shot type waveform diagnosis function draws a waveform for a specified data item in real time as the data is sampled. The sampled data, however, is not stored and thus cannot be output later.

To sample data for one–shot type waveform diagnosis, press the **[START]** key on the WAVE DIAGNOS. (GRAPHIC) screen. Then, data is sampled when the specified start condition is satisfied. Data sampling continues for the specified period.

Pressing the [**SATART**] soft key starts data sampling. While sampling is being performed, SAMPLING blinks at the top of the screen. Once data sampling has been completed, a waveform is automatically displayed.

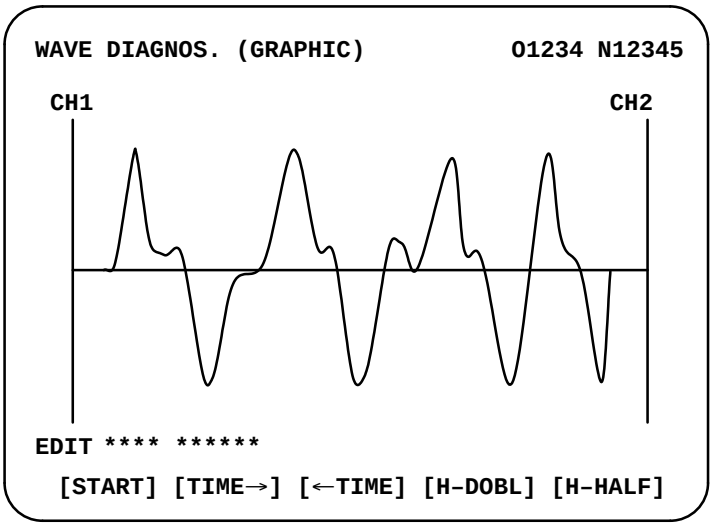

- **Drawing a waveform for storage type waveform diagnosis**

To use storage type waveform diagnosis, set 100 for the display start condition. The maximum data width for storage type waveform diagnosis is 32760 ms. Data must be sampled before starting drawing. The next page explains sampling in detail.

Pressing the **[START]** soft key loads stored data. While the data is being loaded, SAMPLING blinks at the top of the screen. Once the data has been loaded, a waveform is displayed. The date on which the data was stored is displayed at the top left of the screen. If the **[START]** soft key is pressed while data is being stored, storage is stopped and the waveform for the data stored up to that point is displayed. The WAVE DIAGNOS. (MOMORY) screen indicates whether data is being stored.

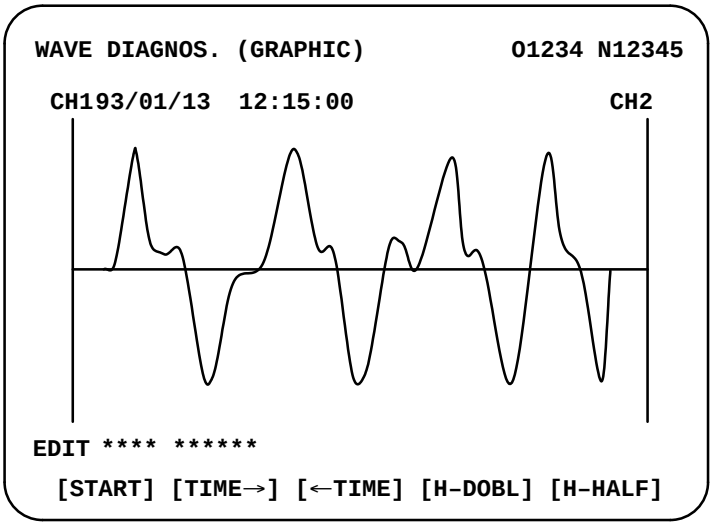

1.10.4 Data sampling for storage type waveform diagnosis

(1) Press the SYSTEM function key. Pressing the menu continuation key [▷] displays the **[W.DGNS]** soft key. Press this soft key to display the WAVE DIAGNOS. (PARAMETER) screen.

(2) Press the **[W.MEM]** soft key to display the WAVE DIAGNOS. (MEMORY) screen. The operation selection soft keys appear.
The configuration of the operation selection soft keys is as follows:

```
WAVE DIAGNOS. (MEMORY)          O1234 N12345

   CONDITION:  100    TRIGGER:  G0123.4

   DATA KINDS         SAMPLING AXIS
   POS ERROR          XYZABCUV
   MOTION CMD         XYZABCUV
   CURRENT (%)        XYZABCUV
   SPEED (RPM)        NONE
   TORQUE CMD         NONE
   HEAT SIMLT         XYZABCUV
               SMPL   TIME :      2. 0SEC
               DATE     : MEMORY

EDIT **** *** ***           08:20:52
  [SELECT] [      ] [      ] [      ] [START]
```

(3) The configuration of the operation selection soft keys is as follows:

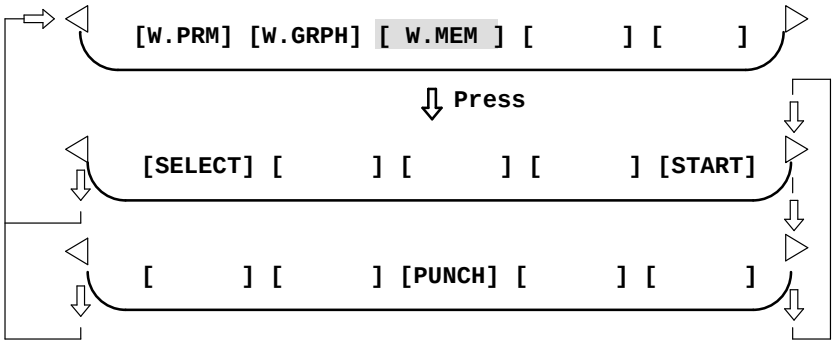

Fig. 1.10.4 Soft keys

(4) Using the cursor, set the necessary data items. To set the sampling axes, position the cursor to the data item to be set, enter the names of the axes for which data will be sampled for that data item, then press **[SELECT]** or INPUT. The axis names are displayed to the right of the data items.

Example) XYZ + **[SELECT]** or INPUT

Once the sampling axes have been selected, the sampling period for each axis is displayed. Subsequently pressing the **[START]** soft key starts data sampling.

Notes
1 Data items for which ***** is displayed cannot be set.
2 To change the sampling axes, enter new axis names then press the **[SELECT]** soft key. Pressing the **[SLELCT]** soft key without entering an axis name results in no sampling axis being set.
3 If the sampling axes are changed during data sampling, data sampling is stopped. In this case, press the **[START]** soft key to restart data sampling for the new sampling axes.
4 Initially, no sampling axis is set.

- **Storage data parameters**

(1) Storage stop condition

100: Stops data storage upon the issue of a servo alarm.

101: Stops data storage upon the issue of a servo alarm or the detection of the rising edge of the trigger signal.

102: Stops data storage upon the issue of a servo alarm or the detection of the falling edge of the trigger signal.

The maximum stored data width is 32760 ms. If the storage stop condition is not satisfied within 32760 ms, data is overwritten, starting with the oldest data.

Parameter No. 3120 can be used to delay data storage being stopped by a specified period (ms), after the issue of a servo alarm.

(2) Trigger: Set the PMC address and bit for the signal used to trigger the stopping of data storage, when 101 or 102 is set for the stop condition.

Example) G0007.2: ST signal

(3) Data type: The following table lists the types of data for which a waveform can be displayed.

Data type	Description	Units
POS ERROR	Servo error (8 ms) for the n–th axis	Pulses (detection units)
MOTION CMD	Pulse distribution for the n–th axis	Pulses (input increments)
CURRENT (%)	Torque for the n–th axis	% (relative to maximum current)
SPEED (RPM)	Actual speed for the n–th axis	RPM
TORQUE CMD	Command current for the n–th axis	% (relative to maximum current)
HEAT SIMLT	Thermal simulation data for the n–th axis	% (OVC alarm ratio)

(4) Sampling axis: The axes along which data will be sampled are displayed.

(5) Sampling period: The sampling period for each axis is displayed.

(6) Date of storage: While data is being sampled, MEMORY blinks in this field. When data sampling stops, the date at that point appears in this field.

1.10.5 Outputting waveform diagnosis data (storage type)

Waveform diagnosis data of servo alarm format can be output to an I/O device, as follows:

1 Select EDIT mode.

2 Press the SYSTEM key, then display the WAVE DIAGNOS. (MEMORY) screen.

3 Press the **[W.MEM]**, ▷ , **[PUNCH]**, and **[EXEC]** soft keys, in this order.

For details of input/output to/from the FANUC Floppy Cassette or FA Card, see "Output to FANUC Floppy Cassette or FA Card," below.

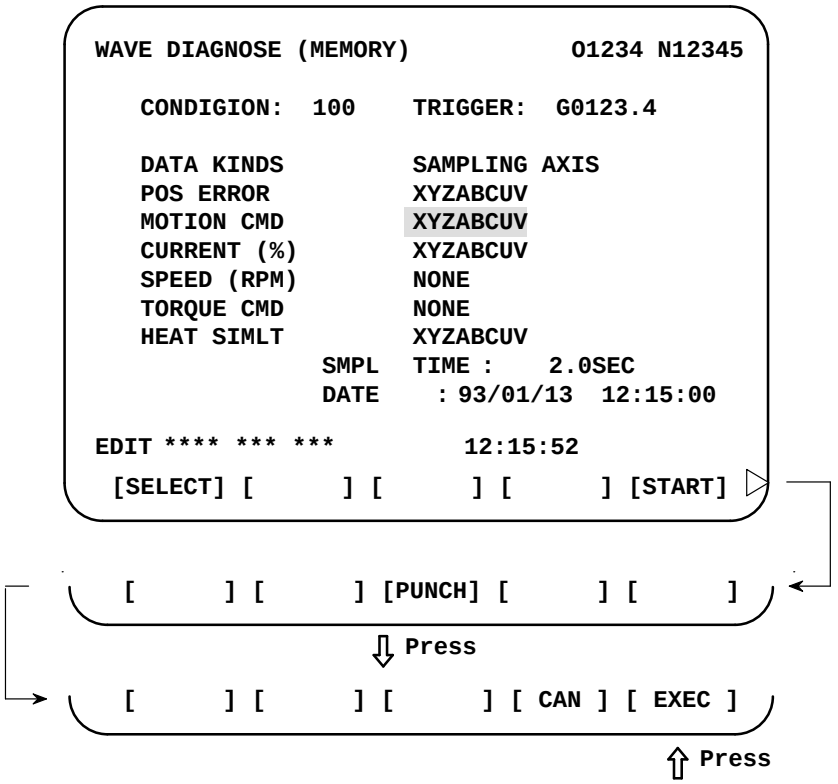

- **Output to FANUC Floppy Cassette or FA Card**

1 Select EDIT mode.

2 Press the SYSTEM key, then display the WAVE DIAGNOS. (MEMORY) screen.

3 Open the write protect tab on the floppy disk or card.

4 Press the **[W.MEM]**, ▷ , **[PUNCH]**, and **[EXEC]** soft keys, in this order.

The waveform diagnosis data is output to a file named WAVE DIAGNOS, to which the number of the last file is assigned.

If a file named WAVE DIAGNOS already exists in the floppy disk or on the card, P/S alarm 86 is issued. A floppy disk or card can contain only one file for waveform diagnosis data. If the existing WAVE DIAGNOS file contains unnecessary waveform diagnosis data of servo alarm format, delete that file before attempting to output new data. The procedure for deleting a file is described later.

- **Output format**

In the servo alarm format, the header, date and time, selected axes, and waveform diagnosis data are output in this order. Data items are identified by nine identifier words. Output data other than the identifier words varies with the data type.

T(identifier word)

T0 : Header
T60 : Positional deviation
T61 : Move command
T62 : Actual current
T63 : Actual speed
T64 : Command current
T65 : Thermal simulation
T68 : Selected axes
T69 : Date and time

1 Header

	T	0	C	W	A	V	E		D	I	A	G	N	O	S	;

C: Data word

2 Data word

	T	6	9	D	*	*	*	*	*	*	,	*	*	*	*	*	*	;

D *..*: Data Example: 12:14 59 seconds on June 23, 1992

	T	6	9	D	1	9	9	2	0	6	2	3	,	1	2	1	4	5	9	;

3 Selected axes

	T	6	8	P	*	*	D	*	*	,	*	*	,		~		*	*	,	

P0: Positional deviation
P1: Actual speed
P2: Move command
P3: Command current
P4: Actual current
P5: Thermal simulation
D*.. *: Axis number (1 to 8)

4 Waveform diagnosis data

T	6	0	D	*	*	,	*	*	,	*	*	,	~	*	*	,	
T	6	1	D	*	*	,	*	*	,	*	*	,	~	*	*	,	
T	6	2	D	*	*	,	*	*	,	*	*	,	~	*	*	,	
T	6	3	D	*	*	,	*	*	,	*	*	,	~	*	*	,	
T	6	4	D	*	*	,	*	*	,	*	*	,	~	*	*	,	
T	6	5	D	*	*	,	*	*	,	*	*	,	~	*	*	,	

D *..*: Waveform diagnosis data x number of axes

Note
No identifier word is output for a data item for which no axis is selected.
The above file corresponds to a paper tape of about 200 m in length.

1.11 OPERATING MONITOR

Load meter of the servo axis and the serial spindle and the speed meter can be displayed.

1.11.1 Display Method

1. Set a parameter to display operating monitor.

	#7	#6	#5	#4	#3	#2	#1	#0
3111			OPM					

#5:(OPM)

0 : Operating monitor is not displayed.

☆ 1 : Operating monitor is displayed.

2. Press the [POS] key to display the position display screen.
3. Press continuous menu key [▷], then soft key **[MONI]** is displayed.
4. Press the soft key **[MONI]**, then the operating monitor screen is displayed.

```
OPERATING MONITOR              O0001 N00001
 (LOAD METER)

 X : [redacted] *  80%      S1:  [redacted]201%

 Y :  * * * * *   0%   (SPEED METER RPM)
                                [redacted]
 Z :  * * * * *   0% S1:  * * *      1500

                        PART COUNT     5
 RUN TIME    0H15M      CYCLE TIME  0H 0M38S
 ACT.F     3000 MM/M

MEM STRT MTN ***           09:06:35
[ ABS ] [ REL ] [ ALL ] [ HNDL ] [ OPRT ]
```

Notes

1 The bar graph for the load meter shows load up to 200%.
2 The bar graph for the speed meter shows the ratio of the current spindle speed to the maximum spindle speed (100%). Although the speed meter normally indicates the speed of the spindle motor, it can also be used to indicate the speed of the spindle by setting bit 6153. (OPS) of parameter 311 to 1.
3 The servo axes for their load meters are displayed are set to parameter No. 3151 to 3. If parameters 3151 to 3153 are all zero, the load meter of the basic axes are displayed.
4 For 10” LCD/14” CRT, the bar of the load meter that exceed 100% shows purple color.

(1) Associated Parameters

3151	Axis number for which the 1st load meter for servo motor is displayed
3152	Axis number for which the 2nd load meter for servo motor is displayed
3153	Axis number for which the 3rd load meter for servo motor is displayed

1.12 LIST OF OPERATIONS

Reset

Function	Data protection key	Parameter write=1	Mode	Function button	Operation
Resetting run hour			–	POS	[(OPRT)] [RUNPRE]→[EXEC]
Resetting no. of machined parts			–	POS	[(OPRT)] [PTSPRE]→[EXEC]
Resetting OT alarm			At Power ON	–	<P> and <CAN>
Resetting alarm 100			–	–	<CAN> and <RESET>

Registration from MDI

Function	Data protection key	Parameter write=1	Mode	Function button	Operation
Inputting parameters		Yes	MDI or E.Stop	SYSTEM (PARAM)	Parameter no.→[NO.SRH]→Data→<INPUT> → PWE =0 →<RESET>
Inputting offset values	OFF		–	OFFSET	Offset number→[NO.SRH]→Offset value→<INPUT>
Inputting setting data	OFF		MDI	SETTING	Setting no.→[NO.SRH]Data→<INPUT>
Input of PMC parameters, counter and data table	OFF		MDI or E.Stop	SYSTEM (PMC)	[PMCPRM]→[COUNTR] or [DATA]→Data→<INPUT>
Inputting PMC parameters (Timer, keep relay)		OFF			[PMCPRM]→[TIMER] or [KEEPRL]→Data→<INPUT>
Tool length measurement			JOG	POS→ OFFSET	<POS>(Display of relative coordinate)<AXIS>→[ORIGIN] →<OFFSET>→Jog the tool to measuring position Offset no.→[NO.SRH]→<AXIS>→[INP.C]

Input/Output with FANUC Cassette

Function	Data protection key	Parameter write=1	Mode	Function button	Operation
Heading a file			EDIT	PROG	<N>→File no.→[▶]→[F SRH]→[EXEC]
Deleting a file	OFF		EDIT	PROG	<N>→File no.→[▶]→[DELETE→[EXEC]
Collating a program			EDIT	PROG	Heading a file→<O>→Program number→[(OPRT)] →[▶]→[READ]→[EXEC]

Inputting From FANUC Cassette

Function	Data protection key	Parameter write=1	Mode	Function button	Operation
Inputting parameters		OFF	EDIT or E.Stop	SYSTEM (PARAM)	[(OPRT)]→[▶]→[READ]→[EXEC]
Inputting PMC parameters		OFF	E.Stop	SYSTEM (PMC)	[▶]→[I/O]→(CANNEL NO)<1> <INPUT>→(DEVICE NAME) [FDCAS]→(KIND OF DATA) [PARAM]→[READ]→(FILE NO) File no.<INPUT>→[EXEC]
Inputting offset values	OFF		EDIT	OFFSET	(Heading a file no.)→[(OPRT)]→[▶]→[READ]→[EXEC]
Registering a program	OFF		EDIT	PROG	<N>→File no.→<INPUT>→[▶]→[READ]→[EXEC]
Inputting macro variables	OFF		EDIT	PROG	<N>→File no.→<INPUT>→[▶]→<O>→Program no. →[READ]→[EXEC]
			MEMORY	PROG	<START>

Output to FANUC Cassette

Function	Data protection key	Parameter write=1	Mode	Function button	Operation
Output of parameter			EDIT	SYSTEM (PARAM)	[(OPRT)]→[▶]→[PUNCH]→[EXEC]
Output of PMC parameter			EDIT	SYSTEM (PMC)	[▶]→[I/O]→(CANNEL NO)<1> <INPUT>→(DEVICE NAME) [FDCAS] →(KIND OF DATA) [PARAM] → [WRITE] → (FILE NO) <–> <1> <INPUT>→[EXEC]
Output of offset			EDIT	OFFSET	[(OPRT)]→[▶]→[PUNCH]→[EXEC]
Output of all programs			EDIT	PROG	<O>→–9999→[▶]→[PUNCH]→[EXEC]
Output of one program			EDIT	PROG	<O>→Program no.→[▶]→[PUNCH]→[EXEC]
Output of macro variables			EDIT	OFFSET	[▶]→[MACRO]→[(OPRT)]→[▶]→[PUNCH]→[EXEC]

Search

Function	Data protection key	Parameter write=1	Mode	Function button	Operation
Searching a program number			MEMORY or EDIT	PROG	<O>→Program no.→[O SRH]
Searching a sequence number			MEMORY	PROG	Program no. search→<N>→Sequence number→[NSRH]
Searching an address word			EDIT	PROG	Data to be searched→[SRH↑] or[SRH↓] or <↑> <↓> (cursor key)
Searching an address only			EDIT	PROG	Address to be searched [SRH↑] or[SRH↓] or <↑> <↓> (Cursor key)
Searching an offset number			–	OFFSET	Offset no.→[NO.SRH]
Searching a diagnostic number			–	SYSTEM (DGNOS)	Diagnostic number→[NO.SRH]
Searching a parameter number			–	SYSTEM (PARAM)	Parameter no.→[NO.SRH]

Edit

Function	Data protection key	Parameter write=1	Mode	Function button	Operation
Display of memory capacity used			EDIT	PROG	[LIB]
Deleting all programs	OFF		EDIT	PROG	<O>→–9999→<DELETE>
Deleting a program	OFF		EDIT	PROG	<O>→Program no.→<DELETE>
Deleting several blocks	OFF		EDIT	PROG	<N>→Sequence no.→<DELETE> (Deleted up to a block with a specified sequence no.)
Deleting a block	OFF		EDIT	PROG	<EOB>→<DELETE>
Deleting a word	OFF		EDIT	PROG	Searching a word to be deleted→<DELETE>
Changing a word	OFF		EDIT	PROG	Searching a word to be changed→New Data→<ALTER >
Inserting a word	OFF		EDIT	PROG	Searching a word immediately before a word to be searched→New Data→<INSERT>

Collation

Function	Data protection key	Parameter write=1	Mode	Function button	Operation
Collating memory	ON		EDIT	PROG	[(OPRT)]→[▶]→[READ]→[EXEC]

Playback

Function	Data protection key	Parameter write=1	Mode	Function button	Operation
Input of NC data			TEACH–IN JOG/ HANDLE	PROG	Jog the machine→<X>,<Y> or <Z>→<INSERT> → NC data → <INSERT> → <EOB> → <INSERT>

Clear

Function	Data protection key	Parameter write=1	Mode	Function key	Operation
Memory all clear			At power ON		M/T : <RESET>AND<DELETE> On 2path are controlled
					On 2path are controlled Path1 : <CAN>AND<1> Path2 : <CAN>AND<2>
					Loader is controlled : <CAN>AND<5>
Parameter/offset clear		○	At Power ON		M/T : <RESET>
					On 2path are controlled Path1 : <RESET>AND<1> Path2 : <RESET>AND<2>
					Loader is controlled : <RESET>AND<5> (Parameter only)
Clearing a program		○	At Power ON		M/T : <DELETE>
					On 2path are controlled Path1 : <DELETE>AND<1> Path2 : <DELETE>AND<2>
					Loader is controlled : <RESET>AND<5>
Program under edition at power off(PS101)			–		<PROG>AND<RESET>
PMC RAM (Note1)			At Power ON		Main CPU : <X>AND<0> (O)
					Loader is controlled : <X>AND<5>
Additional SRAM area clear			At Power ON		M/T : <O> (O) AND<DELETE>
					On 2path are controlled Path1 : <O> (O) AND<1> Path2 : <O> (O) AND<2>

Note

If a PMC ladder program is stored in FROM, loading into DRAM is not performed.
If a PMC ladder program is not stored in FROM, the ladder area in DRAM is cleared.

1.13 WARNING SCREEN DISPLAYED WHEN AN OPTION IS CHANGED

- **Warning screen**

This CNC displays a warning screen when the configuration of the options using the SRAM area is changed. The data for the function indicated on the screen is cleared the next time the system is turned on.

```
   WARNING

YOU SET THE PARAMETER NO.9921#2

THE FOLLOWING DATA WILL BE CLEARED.

* PART PROGRAM MEMORY

PLEASE PRESS <DELETE> OR <CAN> KEY.
<DELETE> : CLEAR ALL DATA                    *1
<CAN>    : CANCEL
```

Note
This line varies with the parameter settings. Two or more function names may be displayed.

- **Allocation error screen**

When an option which uses the SRAM area is added, the system software may require more SRAM than is currently installed in the system. In this case, an allocation error screen appears the first time the system is turned on after the addition of the option, thus restoring the state existing before the addition.

```
   FILE ALLOCATION ERROR

S–RAM CAPACITY IS NOT SUFFICIENT.
ADDITIONAL S–RAM IS NECESSARY.

PLEASE PRESS <CAN> KEY :
RETURN TO THE STATE BEFORE
OPTION PARAMETER IS CHANGED.

                                             *1
```

Note

When the currently installed SRAM is not sufficient, additional SRAM can be mounted. Newly installed SRAM must be cleared before it can be used.

Operation:When turning on the power, hold down the following keys:

<O>+<DELETE> for M/T series

<O>+<1> for two–path control (Main)

<O>+<2> for two–path control (Sub)

When installing additional SRAM, however, perform all clear.

1.14 WARNING SCREEN DISPLAYED WHEN SYSTEM SOFTWARE IS REPLACED (SYSTEM LABEL CHECK ERROR)

System software can be replaced only with compatible system software. Otherwise, the first time the CNC is turned on after the system software is replaced, the following screen will be displayed and the system will not be activated:

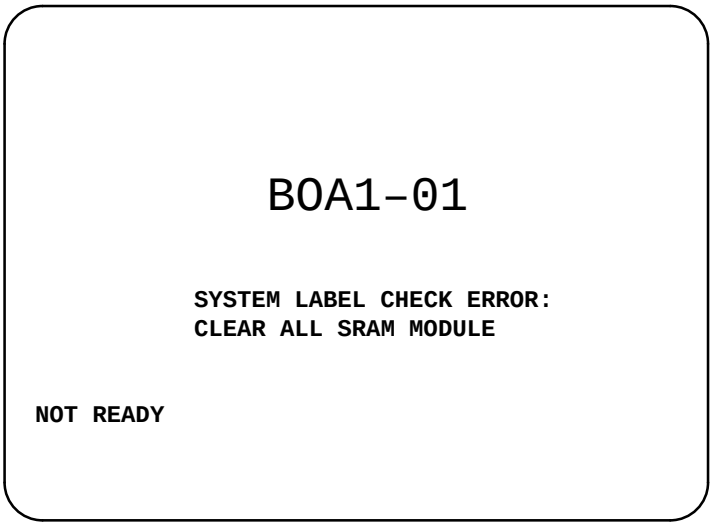

In this case, perform memory all clear (by holding down the RESET and DELETE MDI keys then turning on the power) or reinstall the original system software.

2 HARDWARE

This chapter describes structure of CNC control section, connection of units and the functions of PCBs and modules mounted on PCBs.

2.1 STRUCTURE 90
2.2 GENERAL OF HARDWARE 91
2.3 TOTAL CONNECTION DIAGRAM 92
2.4 NTER–MACHINE CONNECTION 99
2.5 LED DISPLAY AND MODULE CONFIGURATION OF PCB 126
2.6 LIST THE OF PCBS AND UNITS. 161
2.7 HOW TO REPLACE THE MODULES 172
2.8 HOW TO REPLACE THE BATTERIES 173
2.9 HOW TO REPLACE THE MOTORS 175
2.10 FUSE REPLACEMENT IN POWER SUPPLY UNIT 176
2.11 MAINTENANCE OF HEAT PIPE TYPE HEAT EXCHANGER 177
2.12 HOW TO REPLACE THE COLOR LIQUID CRYSTAL DISPLAY 180
2.13 REPLACING THE LCD FUSE 181
2.14 REPLACING THE LCD BACKLIGHT 182

2.1 STRUCTURE

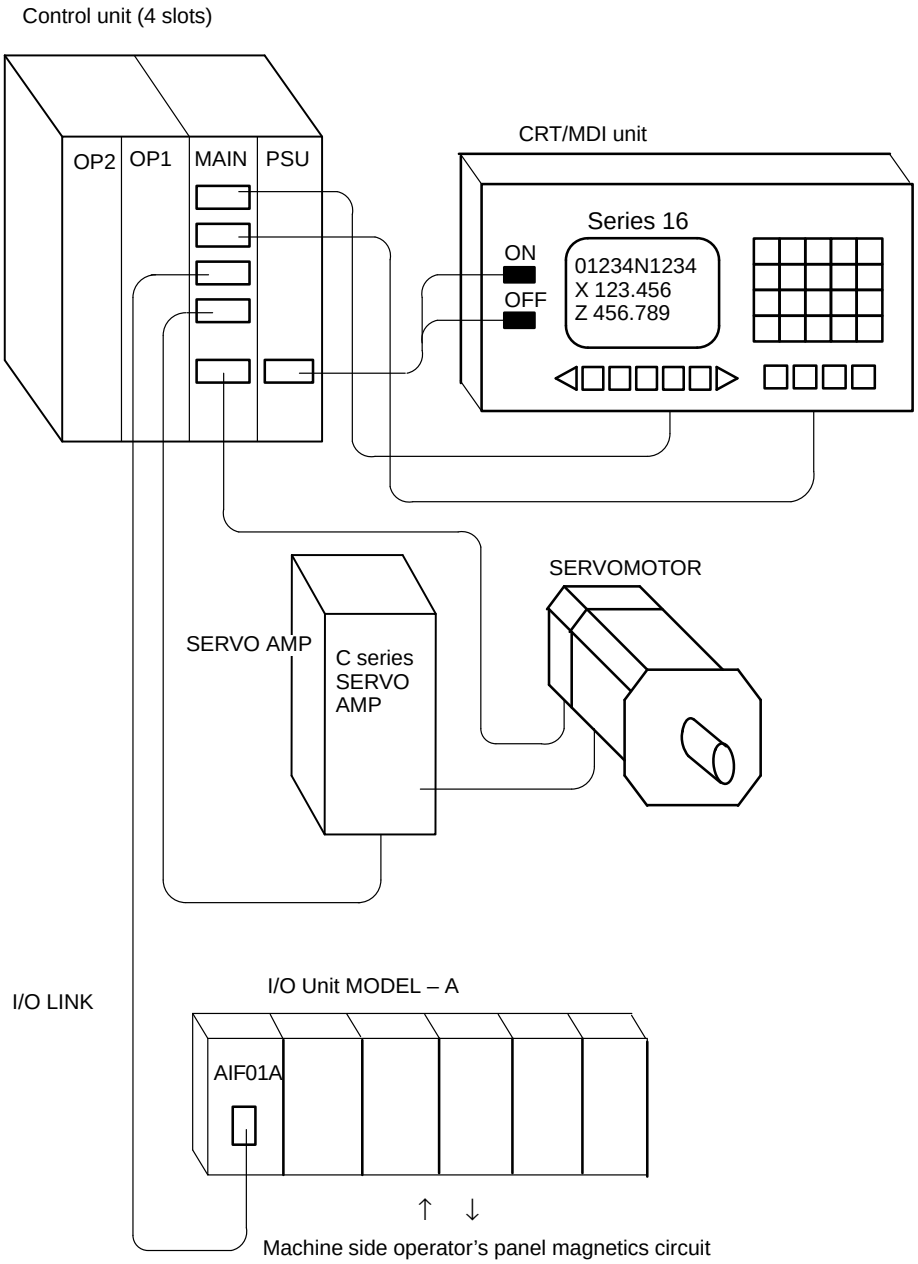

2.2 GENERAL OF HARDWARE

2.2.1 Series 16

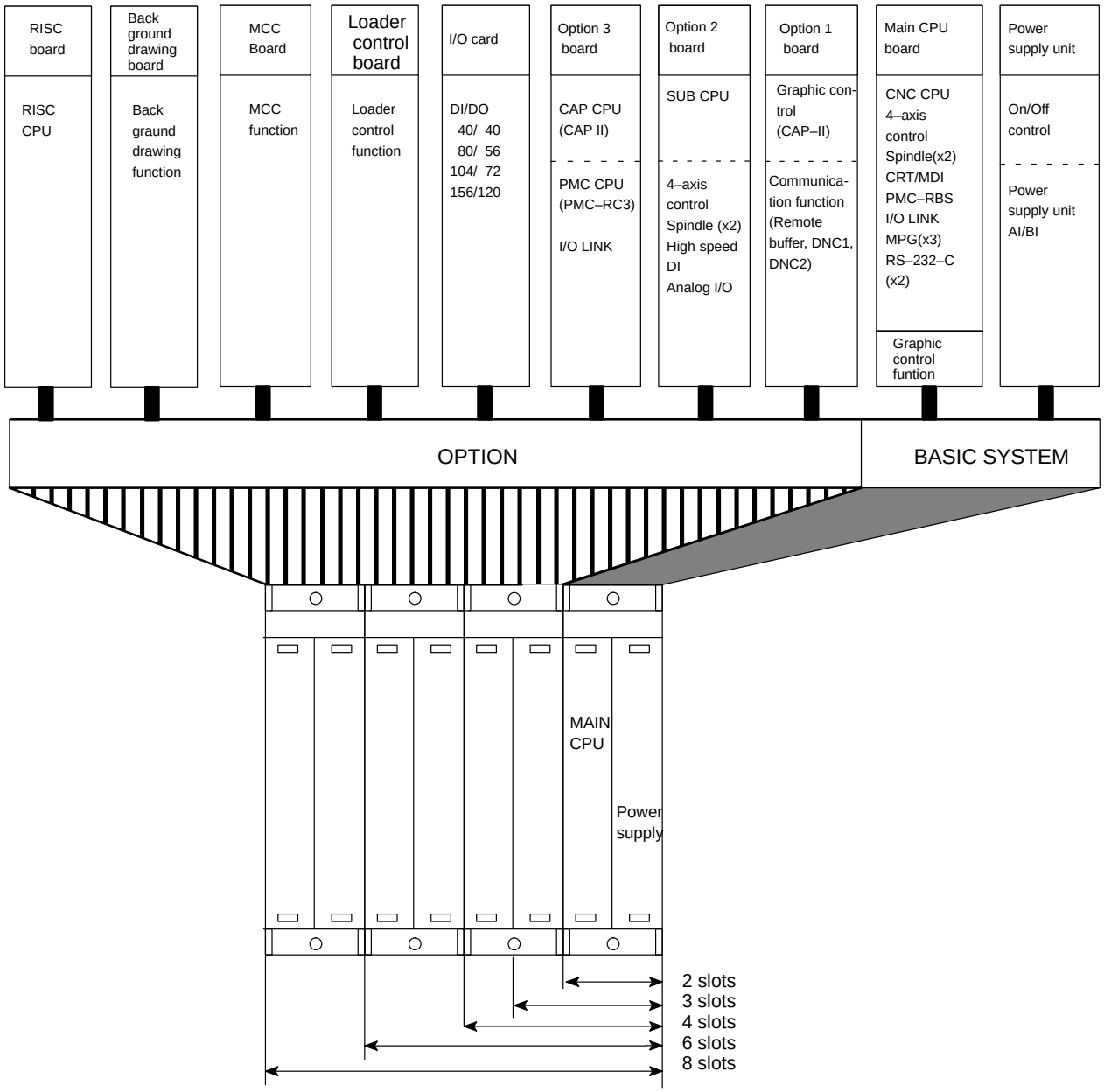

2.3 TOTAL CONNECTION DIAGRAM

2.3.1
16–TB/MB, 160–TB/MB (MAIN–A SPEC.)

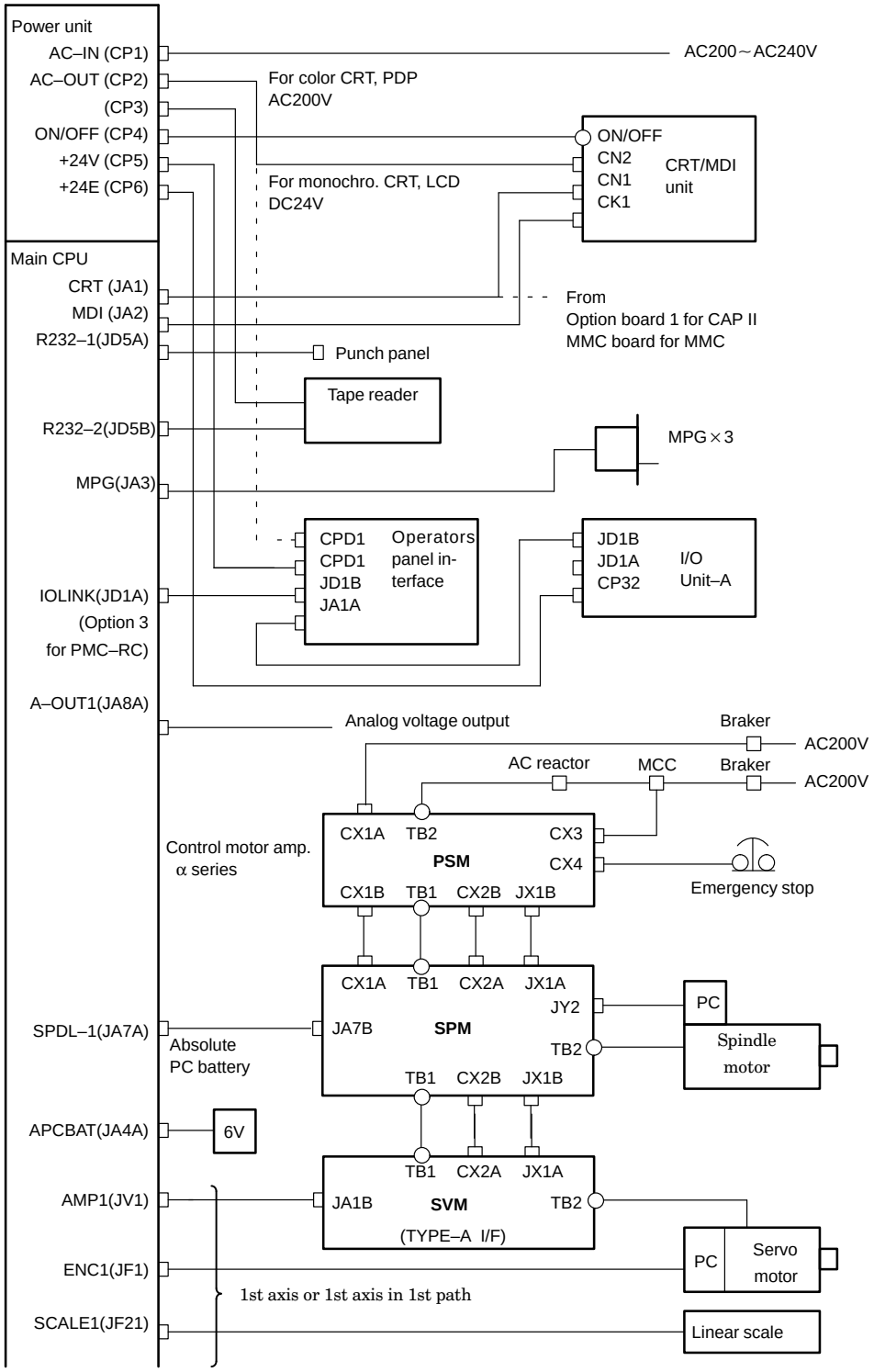

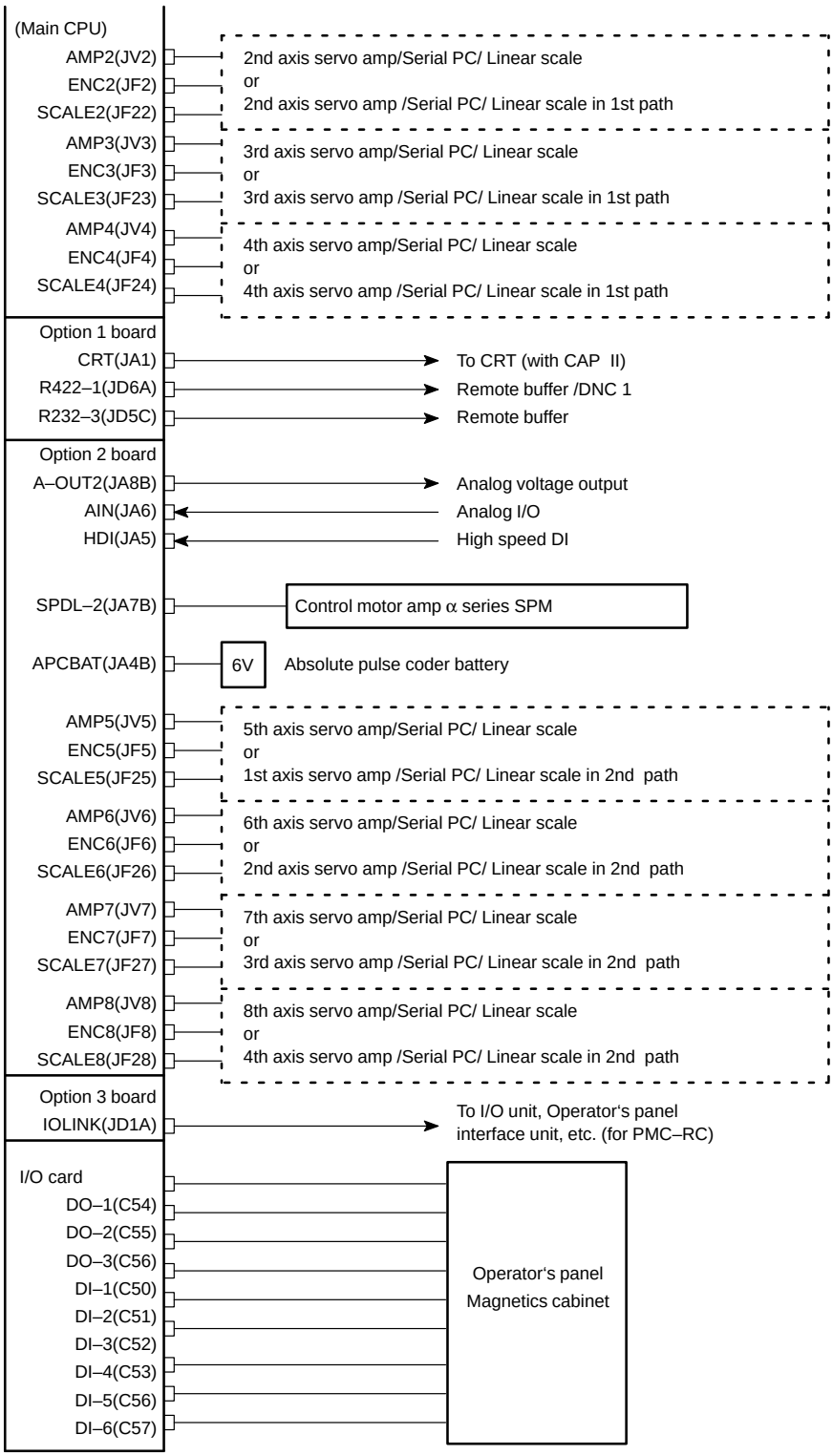
(Main CPU)
AMP2(JV2)
ENC2(JF2)
SCALE2(JF22)
2nd axis servo amp/Serial PC/ Linear scale
or
2nd axis servo amp /Serial PC/ Linear scale in 1st path
AMP3(JV3)
ENC3(JF3)
SCALE3(JF23)
3rd axis servo amp/Serial PC/ Linear scale
or
3rd axis servo amp /Serial PC/ Linear scale in 1st path
AMP4(JV4)
ENC4(JF4)
SCALE4(JF24)
4th axis servo amp/Serial PC/ Linear scale
or
4th axis servo amp /Serial PC/ Linear scale in 1st path
Option 1 board
CRT(JA1)
To CRT (with CAP II)
R422–1(JD6A)
Remote buffer /DNC 1
R232–3(JD5C)
Remote buffer
Option 2 board
A–OUT2(JA8B)
Analog voltage output
AIN(JA6)
Analog I/O
HDI(JA5)
High speed DI
SPDL–2(JA7B)
Control motor amp α series SPM
APCBAT(JA4B)
6V
Absolute pulse coder battery
AMP5(JV5)
ENC5(JF5)
SCALE5(JF25)
5th axis servo amp/Serial PC/ Linear scale
or
1st axis servo amp /Serial PC/ Linear scale in 2nd path
AMP6(JV6)
ENC6(JF6)
SCALE6(JF26)
6th axis servo amp/Serial PC/ Linear scale
or
2nd axis servo amp /Serial PC/ Linear scale in 2nd path
AMP7(JV7)
ENC7(JF7)
SCALE7(JF27)
7th axis servo amp/Serial PC/ Linear scale
or
3rd axis servo amp /Serial PC/ Linear scale in 2nd path
AMP8(JV8)
ENC8(JF8)
SCALE8(JF28)
8th axis servo amp/Serial PC/ Linear scale
or
4th axis servo amp /Serial PC/ Linear scale in 2nd path
Option 3 board
IOLINK(JD1A)
To I/O unit, Operator‘s panel
interface unit, etc. (for PMC–RC)
I/O card
DO–1(C54)
DO–2(C55)
DO–3(C56)
DI–1(C50)
DI–2(C51)
DI–3(C52)
DI–4(C53)
DI–5(C56)
DI–6(C57)
Operator‘s panel
Magnetics cabinet

2.3.2
16–TB/MB, 160–TB/MB, 18–TB/MB, 180–TB/MB (MAIN–B SPEC.)

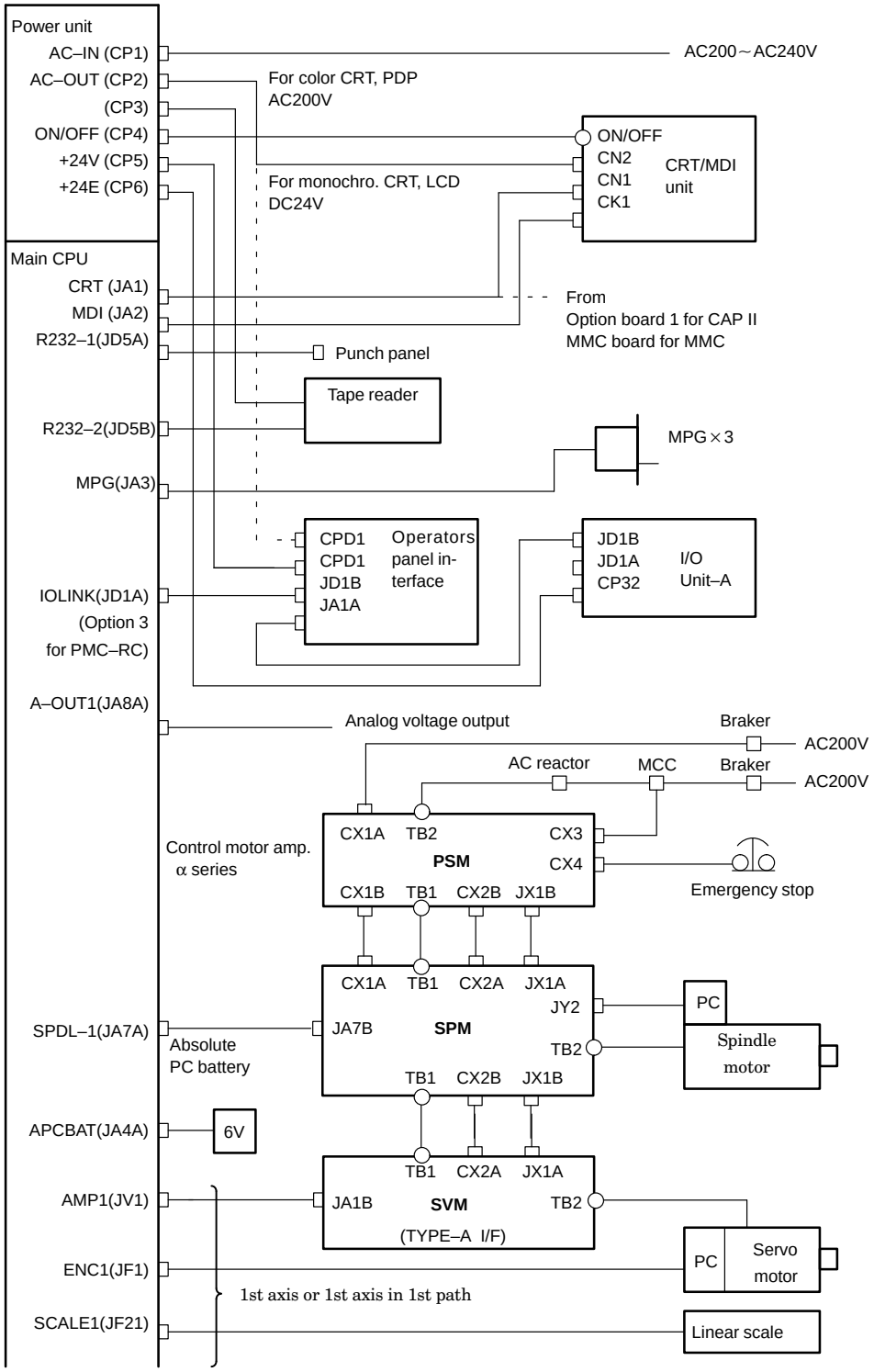

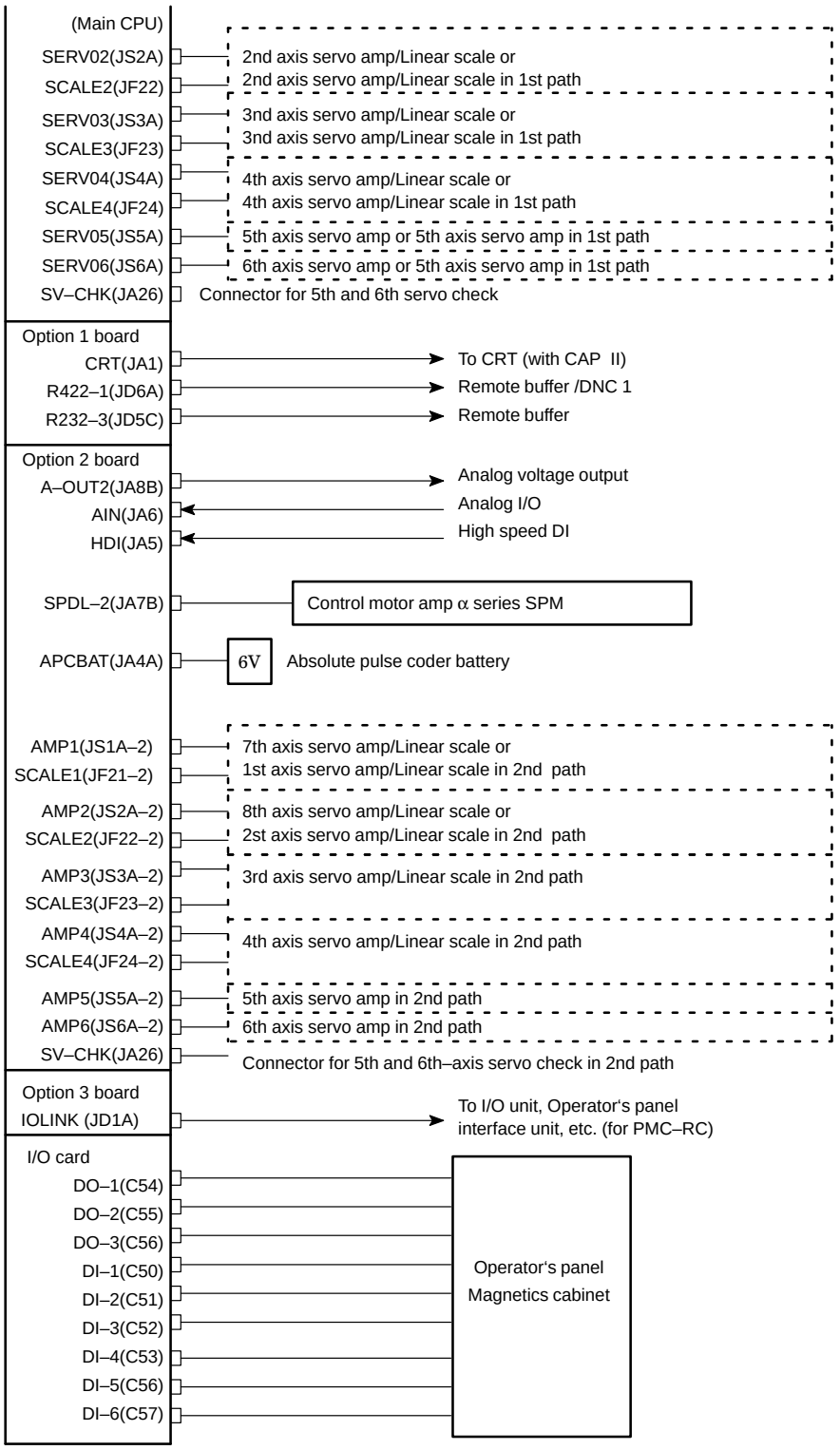
(Main CPU)
SERV02(JS2A)
SCALE2(JF22)
2nd axis servo amp/Linear scale or
2nd axis servo amp/Linear scale in 1st path
SERV03(JS3A)
SCALE3(JF23)
3nd axis servo amp/Linear scale or
3nd axis servo amp/Linear scale in 1st path
SERV04(JS4A)
SCALE4(JF24)
4th axis servo amp/Linear scale or
4th axis servo amp/Linear scale in 1st path
SERV05(JS5A)
5th axis servo amp or 5th axis servo amp in 1st path
SERV06(JS6A)
6th axis servo amp or 5th axis servo amp in 1st path
SV–CHK(JA26)
Connector for 5th and 6th servo check
Option 1 board
CRT(JA1)
To CRT (with CAP II)
R422–1(JD6A)
Remote buffer /DNC 1
R232–3(JD5C)
Remote buffer
Option 2 board
A–OUT2(JA8B)
Analog voltage output
AIN(JA6)
Analog I/O
HDI(JA5)
High speed DI
SPDL–2(JA7B)
Control motor amp α series SPM
APCBAT(JA4A)
6V
Absolute pulse coder battery
AMP1(JS1A–2)
SCALE1(JF21–2)
7th axis servo amp/Linear scale or
1st axis servo amp/Linear scale in 2nd path
AMP2(JS2A–2)
SCALE2(JF22–2)
8th axis servo amp/Linear scale or
2st axis servo amp/Linear scale in 2nd path
AMP3(JS3A–2)
SCALE3(JF23–2)
3rd axis servo amp/Linear scale in 2nd path
AMP4(JS4A–2)
SCALE4(JF24–2)
4th axis servo amp/Linear scale in 2nd path
AMP5(JS5A–2)
5th axis servo amp in 2nd path
AMP6(JS6A–2)
6th axis servo amp in 2nd path
SV–CHK(JA26)
Connector for 5th and 6th–axis servo check in 2nd path
Option 3 board
IOLINK (JD1A)
To I/O unit, Operator's panel
interface unit, etc. (for PMC–RC)
I/O card
DO–1(C54)
DO–2(C55)
DO–3(C56)
DI–1(C50)
DI–2(C51)
DI–3(C52)
DI–4(C53)
DI–5(C56)
DI–6(C57)
Operator's panel
Magnetics cabinet

2.3.3
18–TB/MB

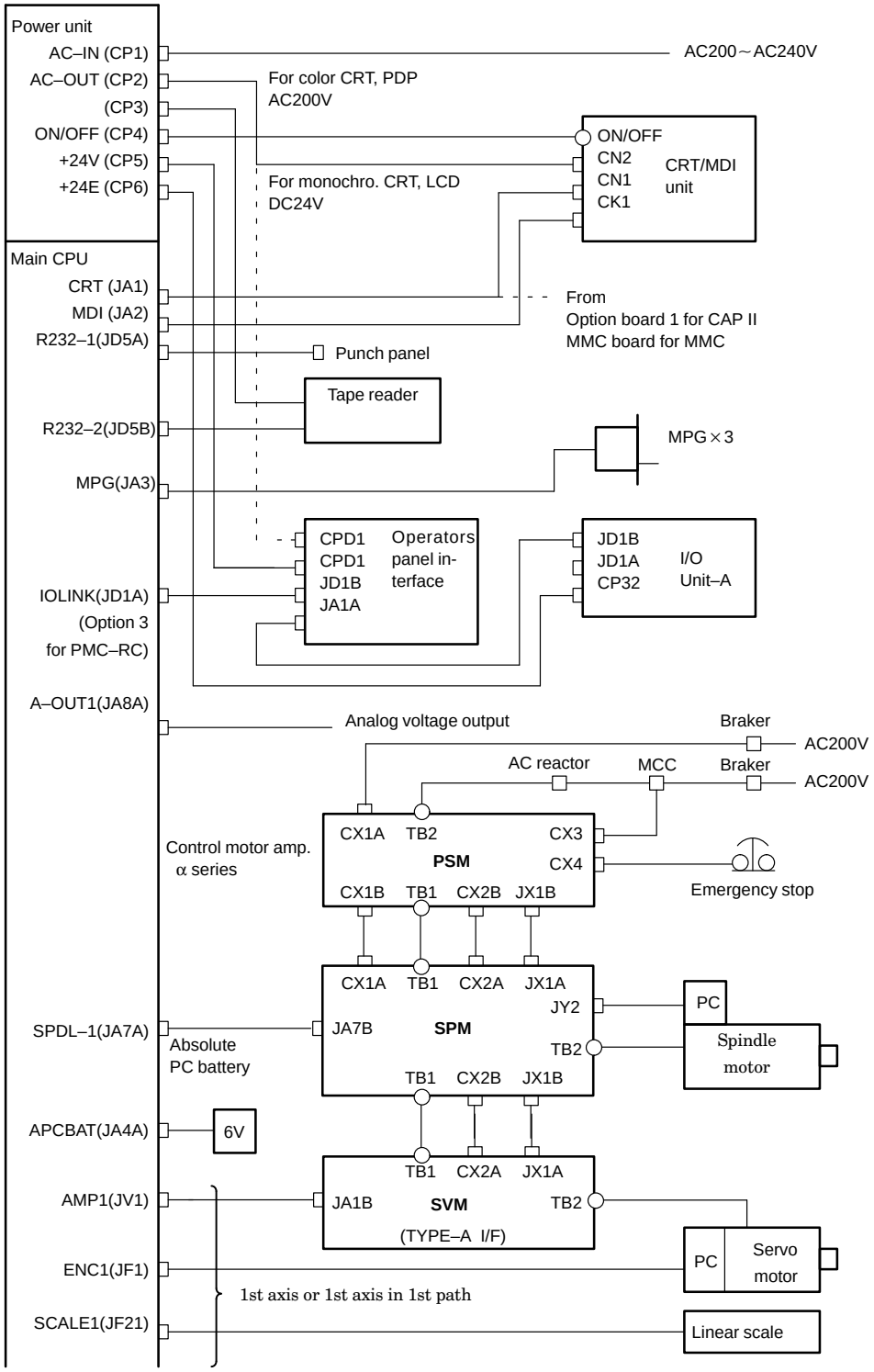
Power unit
AC–IN (CP1)
AC–OUT (CP2)
(CP3)
ON/OFF (CP4)
+24V (CP5)
+24E (CP6)
AC200～AC240V
For color CRT, PDP
AC200V
For monochro. CRT, LCD
DC24V
ON/OFF
CN2
CN1
CK1
CRT/MDI
unit
Main CPU
CRT (JA1)
MDI (JA2)
R232–1(JD5A)
From
Option board 1 for CAP II
MMC board for MMC
Punch panel
Tape reader
R232–2(JD5B)
MPG×3
MPG(JA3)
CPD1
CPD1
JD1B
JA1A
Operators
panel in-
terface
JD1B
JD1A
CP32
I/O
Unit–A
IOLINK(JD1A)
(Option 3
for PMC–RC)
A–OUT1(JA8A)
Analog voltage output
Braker
AC200V
AC reactor
MCC
Braker
AC200V
Control motor amp.
α series
CX1A
TB2
CX3
PSM
CX4
CX1B
TB1
CX2B
JX1B
Emergency stop
CX1A
TB1
CX2A
JX1A
JY2
PC
SPDL–1(JA7A)
JA7B
SPM
TB2
Spindle
motor
Absolute
PC battery
TB1
CX2B
JX1B
APCBAT(JA4A)
6V
TB1
CX2A
JX1A
AMP1(JV1)
JA1B
SVM
TB2
(TYPE–A I/F)
PC
Servo
motor
ENC1(JF1)
1st axis or 1st axis in 1st path
SCALE1(JF21)
Linear scale

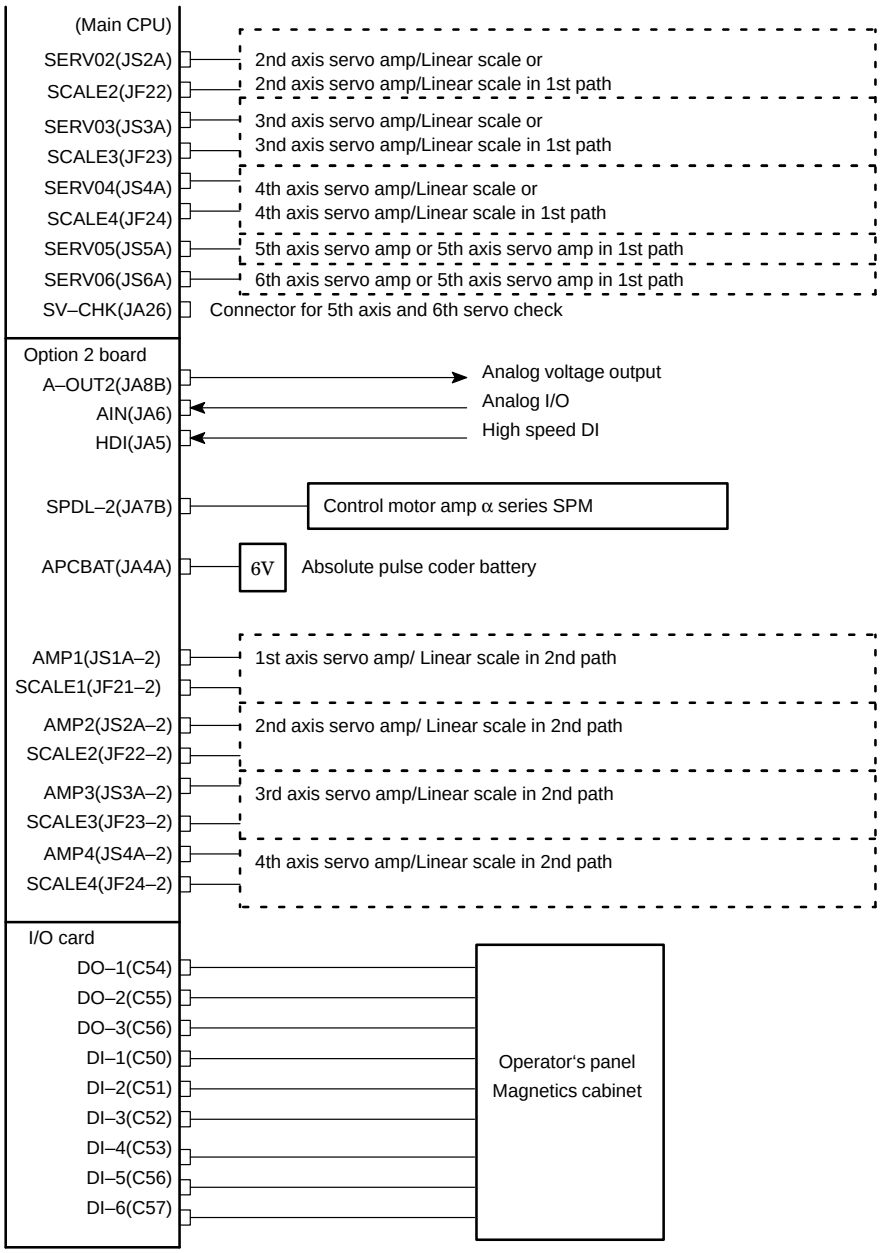
(Main CPU)
SERV02(JS2A)
SCALE2(JF22)
2nd axis servo amp/Linear scale or
2nd axis servo amp/Linear scale in 1st path
SERV03(JS3A)
SCALE3(JF23)
3nd axis servo amp/Linear scale or
3nd axis servo amp/Linear scale in 1st path
SERV04(JS4A)
SCALE4(JF24)
4th axis servo amp/Linear scale or
4th axis servo amp/Linear scale in 1st path
SERV05(JS5A)
5th axis servo amp or 5th axis servo amp in 1st path
SERV06(JS6A)
6th axis servo amp or 5th axis servo amp in 1st path
SV–CHK(JA26)
Connector for 5th axis and 6th servo check
Option 2 board
A–OUT2(JA8B)
Analog voltage output
AIN(JA6)
Analog I/O
HDI(JA5)
High speed DI
SPDL–2(JA7B)
Control motor amp α series SPM
APCBAT(JA4A)
6V
Absolute pulse coder battery
AMP1(JS1A–2)
SCALE1(JF21–2)
1st axis servo amp/ Linear scale in 2nd path
AMP2(JS2A–2)
SCALE2(JF22–2)
2nd axis servo amp/ Linear scale in 2nd path
AMP3(JS3A–2)
SCALE3(JF23–2)
3rd axis servo amp/Linear scale in 2nd path
AMP4(JS4A–2)
SCALE4(JF24–2)
4th axis servo amp/Linear scale in 2nd path
I/O card
DO–1(C54)
DO–2(C55)
DO–3(C56)
DI–1(C50)
DI–2(C51)
DI–3(C52)
DI–4(C53)
DI–5(C56)
DI–6(C57)
Operator's panel
Magnetics cabinet

2.4 INTER–MACHINE CONNECTION

2.4.1 CRT/MDI unit

- **Connection of Series 16**

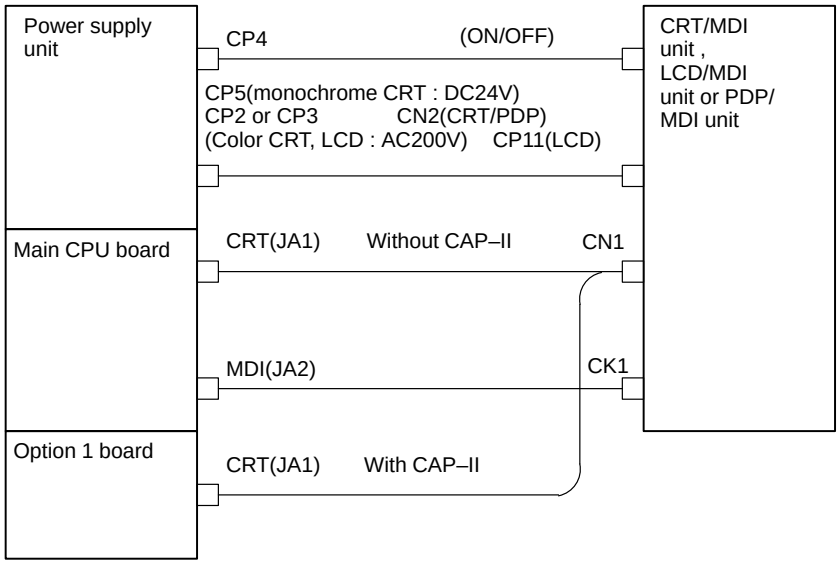

- **Terminal layout**

CP2 or CP3

1	200A
2	200B
3	G

For 9″ color CRT or 9″ PDP or 14″ color CRT

CN2 (CRT)

1	200A
2	200B
3	G

CP5

1	+24V
2	0V
3	

For 9″ mono-chrome CRT

CN2

1	2	3	4	5	6
		0V	0V	+24V	+24V

CRT

1	+24V
2	0V
3	

For 9.5″ LCD or 8.4″ LCD

CP5 +24V

1	
2	0V
3	

- **Cable connection**

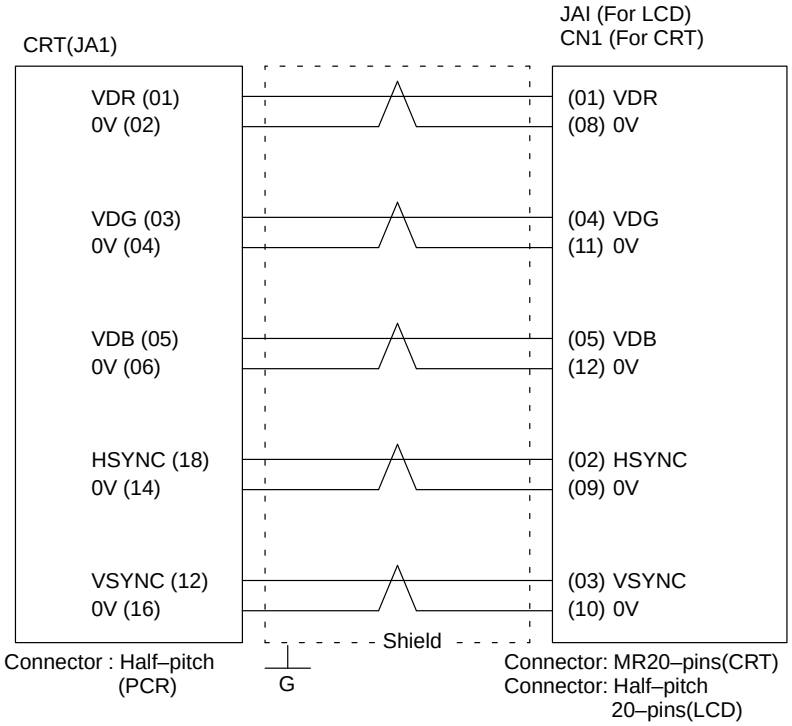

Recommended cable material:A66L–0001–0296 (Coaxial cable)

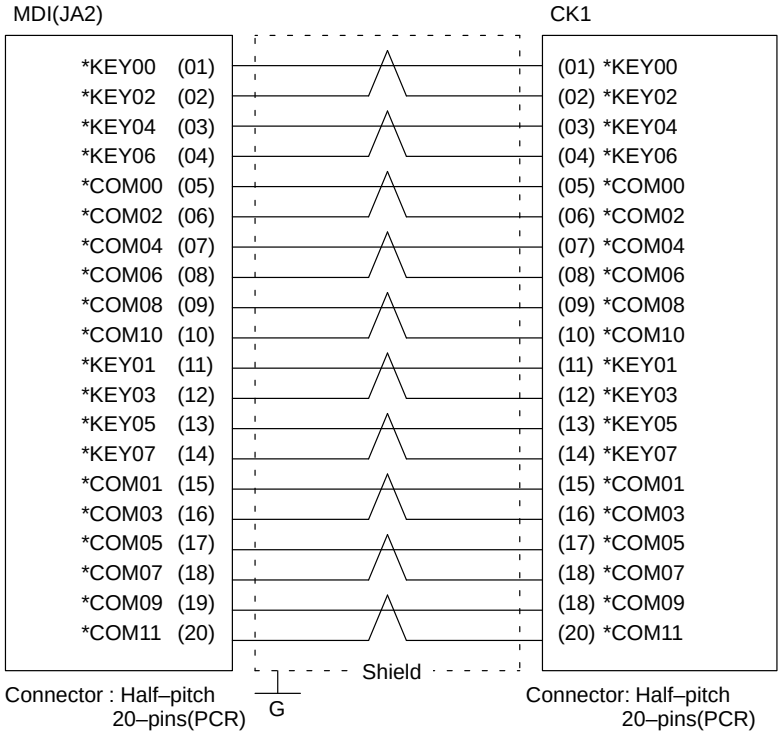

Recommended cable material :
A66L–0001–0284#10P(#28AWG × 10 Pairs)

2.4.2 Reader/Puncher Interface

- **Connection**

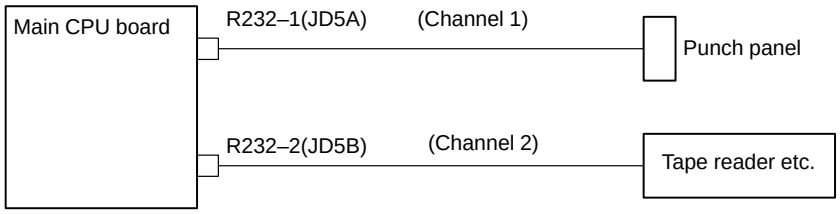

- **Cable connection**

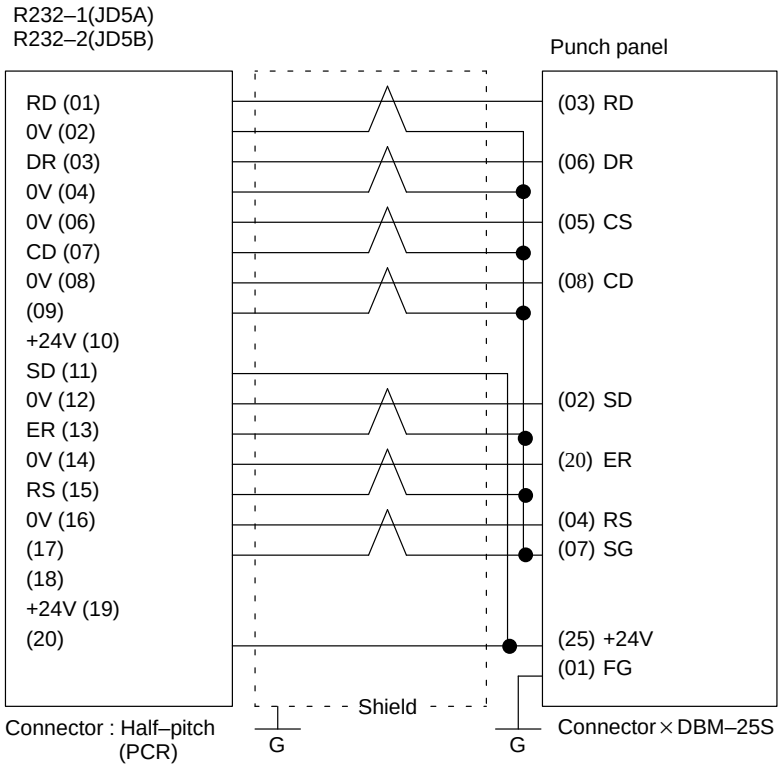

Recommended cable material:
A66L–0001–0284#10P(#28AWG × 10 Pairs)

2.4.3 Manual Pulse Generator

- **Connection**

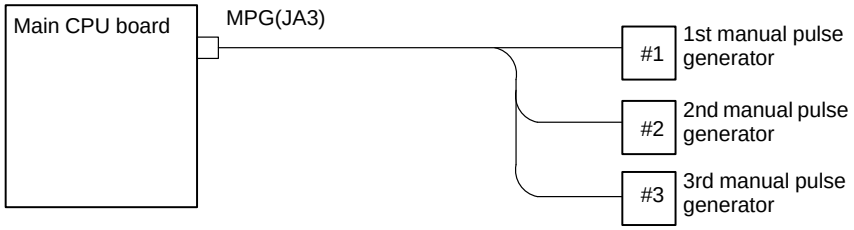

- **Cable connection**

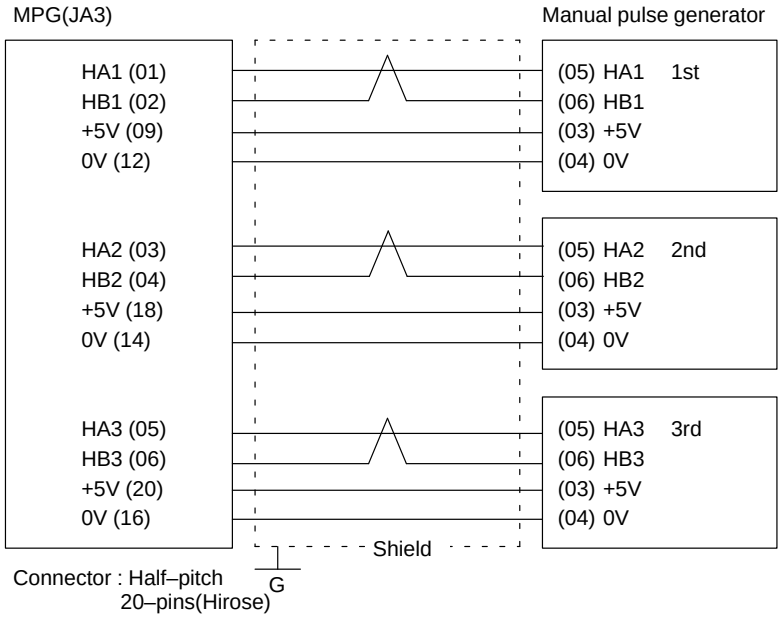

Recommended cable :A66L–0001–0286(#20AWG × 6, #24AWG × 3 pairs)

- **Voltage drop by cable length**

Restrict voltage drop by cable to less than 0.2V in accordance with +5V/0V.

$$\text{Voltage drop } V = \frac{A \times R \times 2L}{m}$$

Where A : manual pulse generator's current (0.1A)
R : Registance per cable length
L : Cable length
m : No. of cables

When cable A66L–0001–0286 is used for one unit of manual pulse generator, registance is 0.0394Ω/m and 3 cables are used. Therefore, cable length can be extended up to 50 m according to the following equation:

$$L = \frac{V \times m}{2A \times R} = \frac{0.2 \times 3}{2 \times 0.1 \times 0.0394} = 76.75[m]$$

2.4.4 I/O LINK

- **Connection**

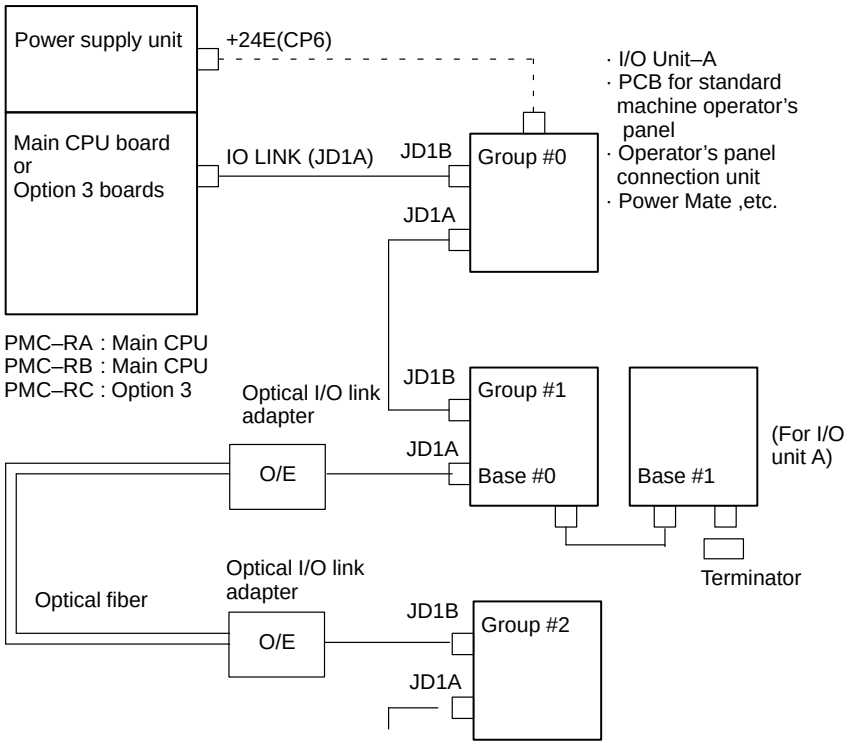

Expanded up to 16 Groups

- **Cable connection within group**

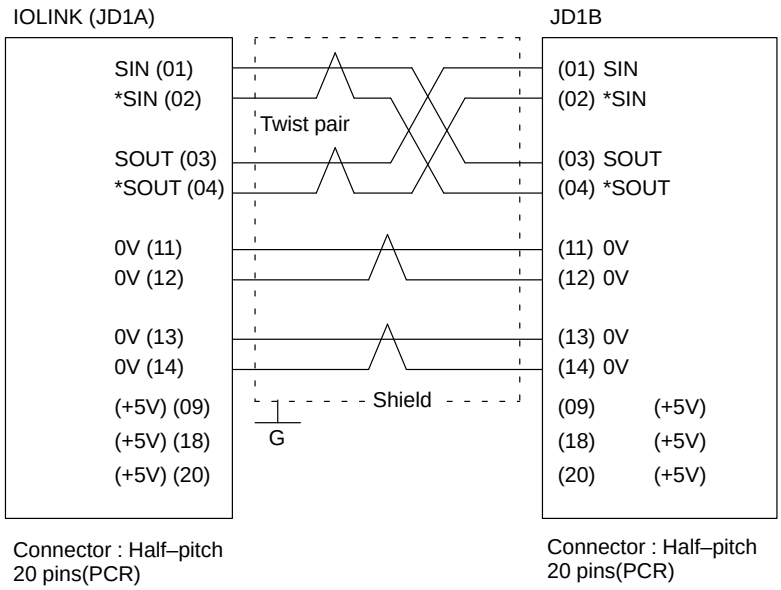

Recommended cable:A66L–0001–0284 (#28AWG × 10 pairs)

Note

Connect +5V when optical I/O link adapter is used. Do not connect when metal cable is used.
When metal cable is used, cable length between units is extended by 10 m.
When optical I/O link adapter is used, cable length between units is extended by 200m.

- **Connection between bases (with I/O unit–A)**

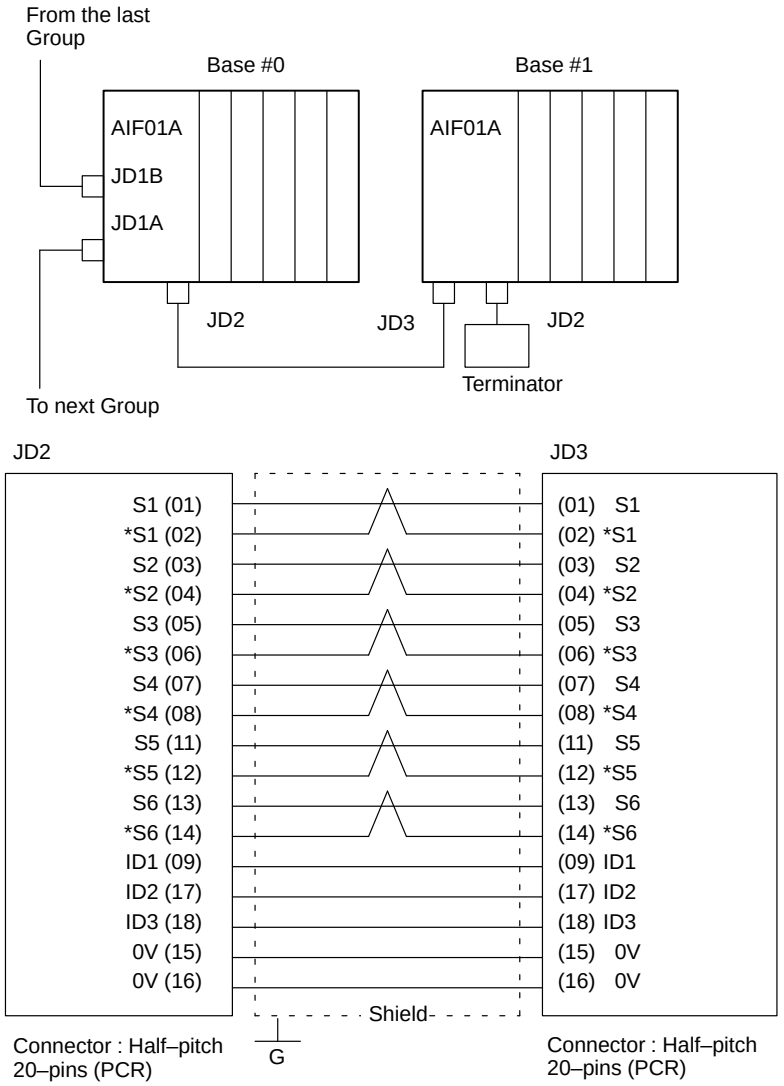

- **Cable connection in the terminator**

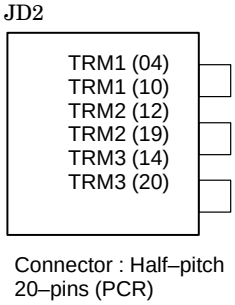

2.4.5 Servo Interface

When using the C series servo amplifier or α series servo amplifier (type A interface), connect the serial pulse coder cable to the NC.
When using the α series servo amplifier (type B interface), connect the serial pulse coder cable to the servo amplifier module.

- **Connection to C series servo amplifier**

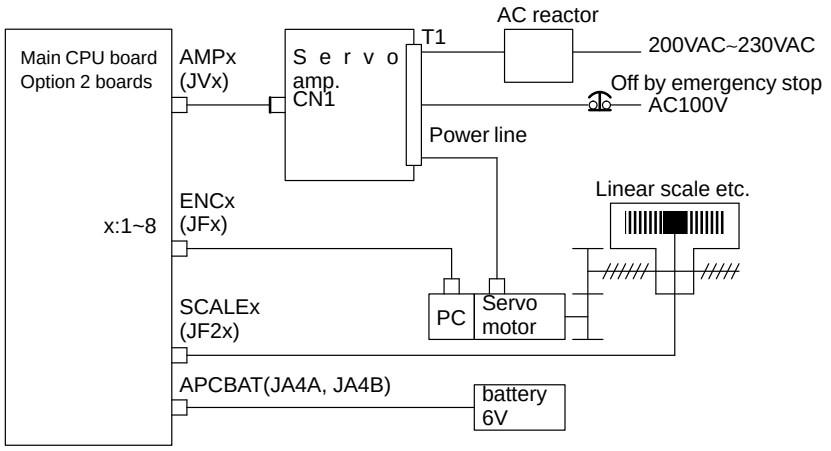

- **Connection to cable**

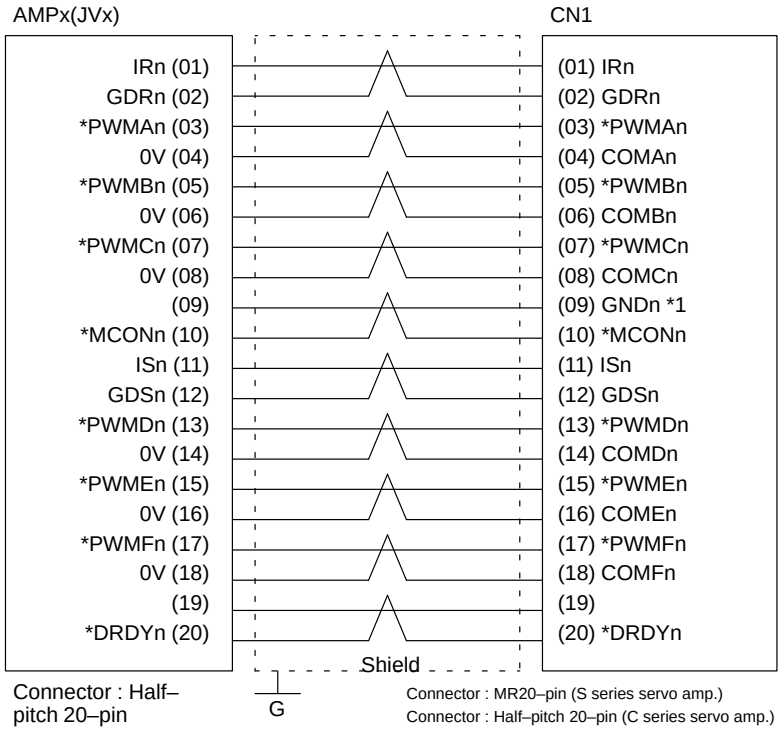

Recommended cable material : A66L–0001–0284#10P(#28AWG × 10 pairs)

Notes
1 Not used for C series amplifier.
2 Suffix n in signal name is an axis number 1 to 8.

- **Connection to α series servo amplifier (Interface type A)**

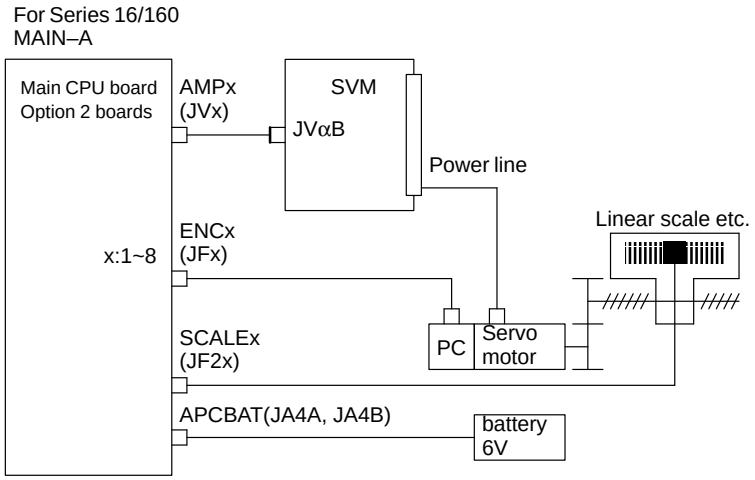

- **Connection to cable**

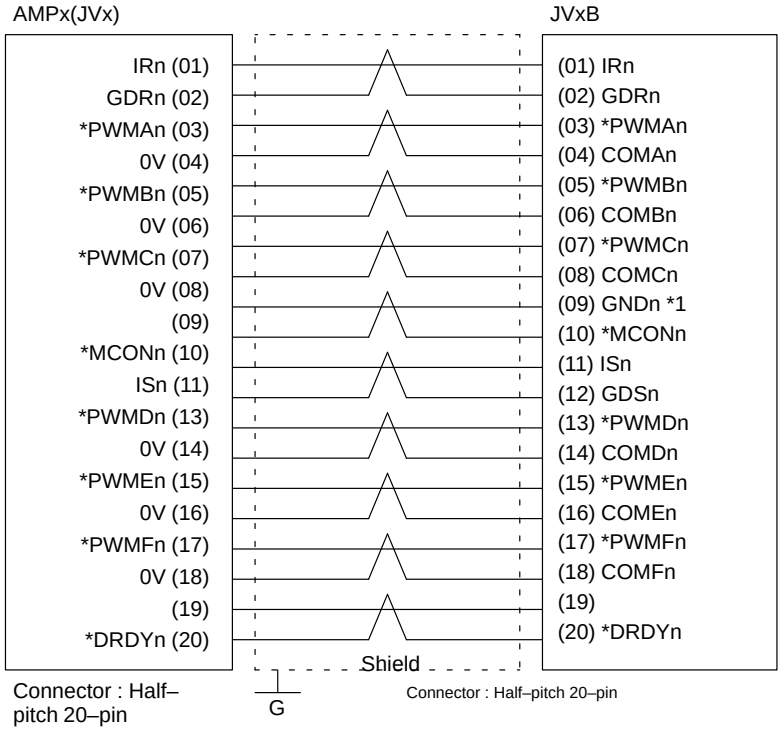

Recommended cable material : A66L–0001–0284#10P(#28AWG × 10 pairs)

Note
Suffix n in signal name is an axis number 1 to 8.

- **Connection to α series servo amplifier (Interface type B)**

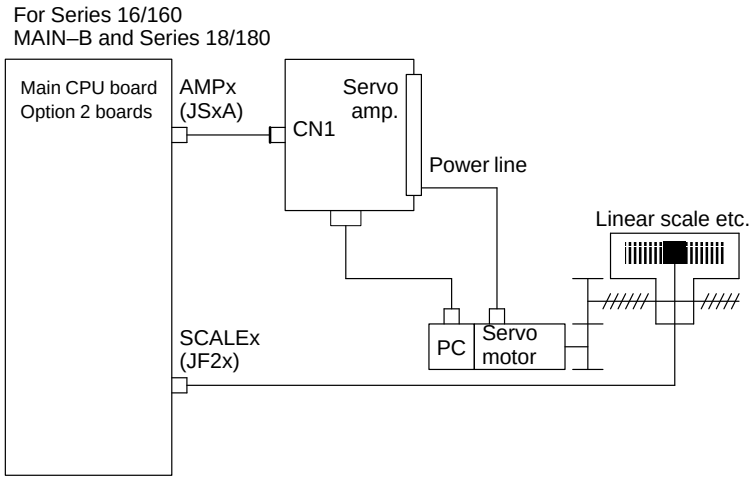

- **Connection to cable**

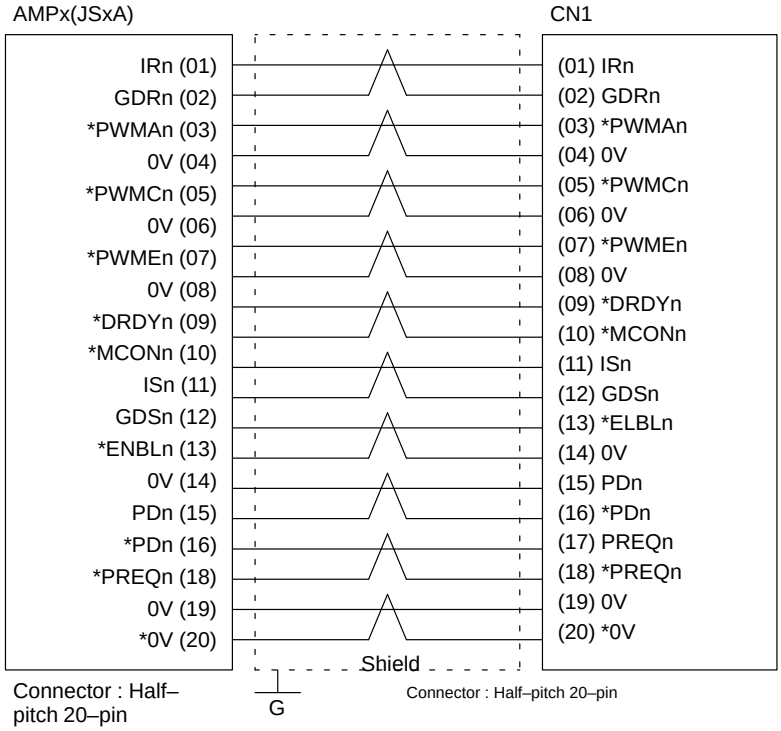

Recommended cable material : A66L–0001–0284#10P(#28AWG × 10 pairs)

Note
Suffix n in signal name is an axis number.

- **Connection of serial pulse coder**

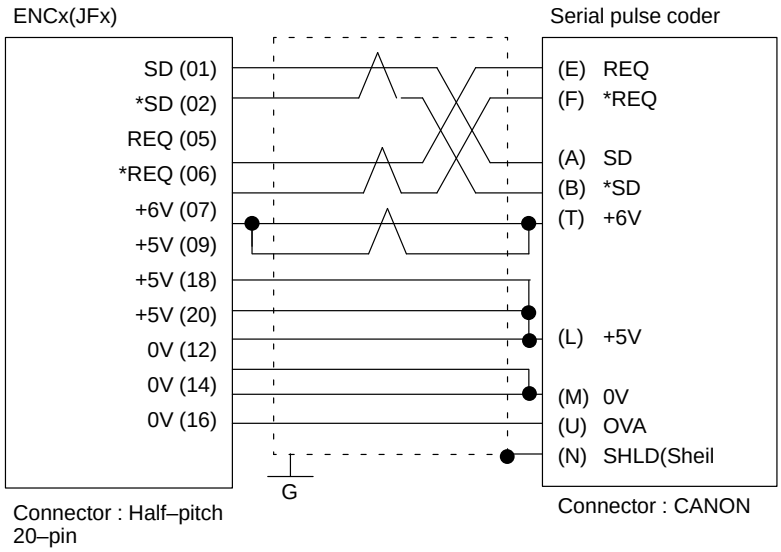

Recommended cable : A66L–0001–0286(#20AWG × 6, #24AWG × 10 pairs)

Note
Be sure to note voltage drop by cable resistance.

- **Serial pulse coder A**

$$\text{Voltage drop(Max)} = 0.25[V] \geqq \frac{0.40 \times R \times 2L}{M}$$

0.40 : Current consumed by pulse coder
R : Resistance per unit length of cable [Ω/m]
L : Cable length [m]
M : No. of wires to 5V and 0V

[Ex1]A66L–0001–0286(20/0.18,0.0394W/m) : L (Max)=23.79m

[Ex2]A66L–0001–0157(50/0.18,0.016W/m) : L (Max)=58.59m

However, as a cable of 11 dia. cannot be clamped with the half–pitch connector, prepare a relaying connector or fabricate the cabel by peeling off the sheeth and covering a heat–shrinkable tube.
When using the C series servo amplifier or series servo amplifier (type A), connect the serial pulse coder to the NC.When using the series servo amplifier (type B), connect the serial pulse coder to the servo amplifier.

- **Serial pulse coder C**

$$\text{Voltage drop (Max) = 0.20[V]} \geqq \frac{0.35 \times R \times 2L}{M}$$

0.35 : Current consumed by pulse coder
R : Resistance per unit length of cable [Ω/m]
L : Cable length [m]
M : No. of wires to 5V and 0V

[Ex1]A66L–0001–0286(20/0.18,0.0394W/m) : L (Max)=21.75m

[Ex2]A66L–0001–0157(50/0.18,0.016W/m) : L (Max)=53.57m

However, as a cable of 11 dia. cannot be clamped with the half–pitch connector, prepare a relaying connector or fabricate the cabel by peeling off the sheeth and covering a heat–shrinkable tube.

Note
When using the C series servo amplifier or α series servo amplifier (type A), connect the serial pulse coder to the NC. When using the α series servo amplifier (type B), connect the serial pulse coder to the servo amplifier.

2.4.6 Connections by Type of Detectors

- **Built–in pulse coder**

Connection to C series servo amplifier

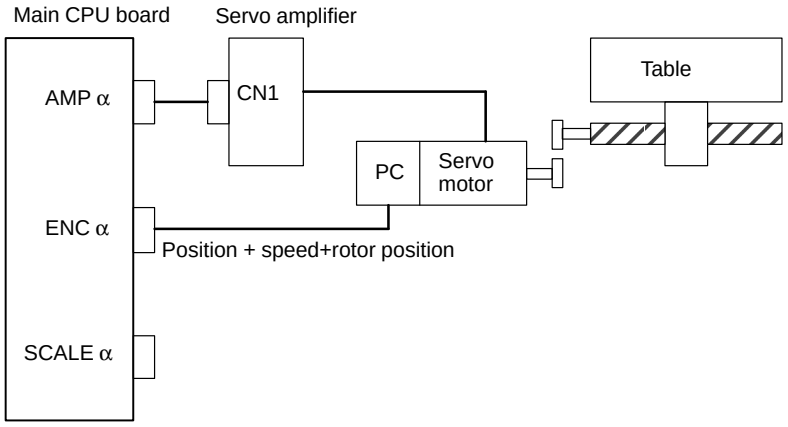

Connection to α series servo amplifier (Interface of type A)

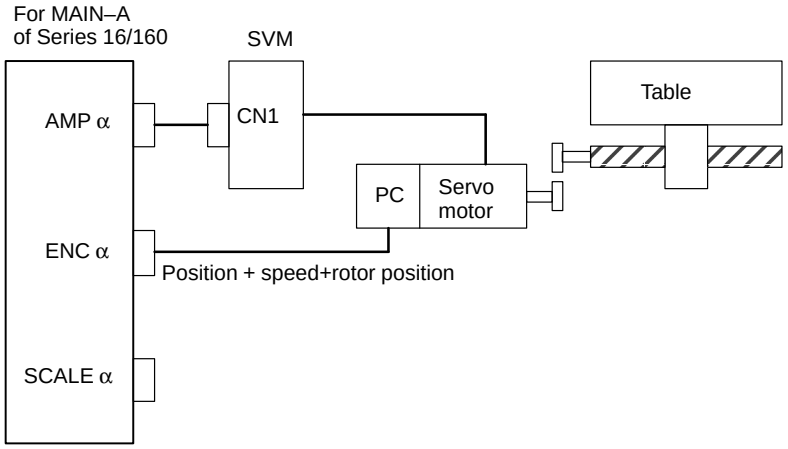

Connection with α series servo amplifier (Interface of type B)

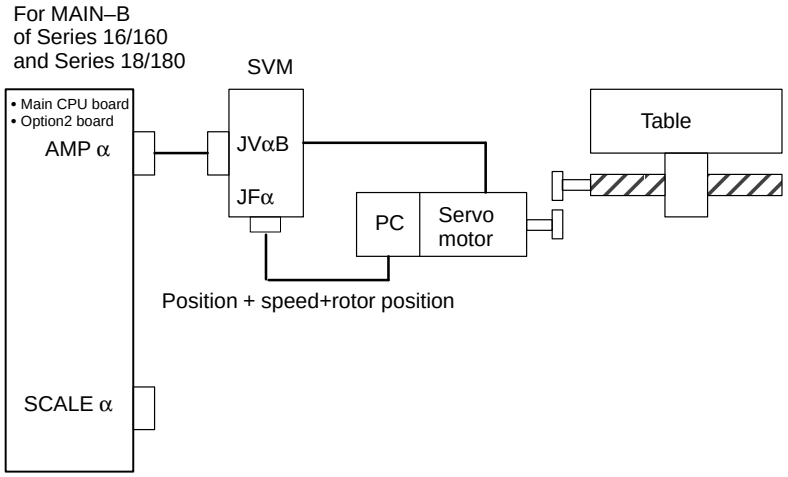

- **Separate type pulse coder,Linear scale**

Connection to C series servo amplifier

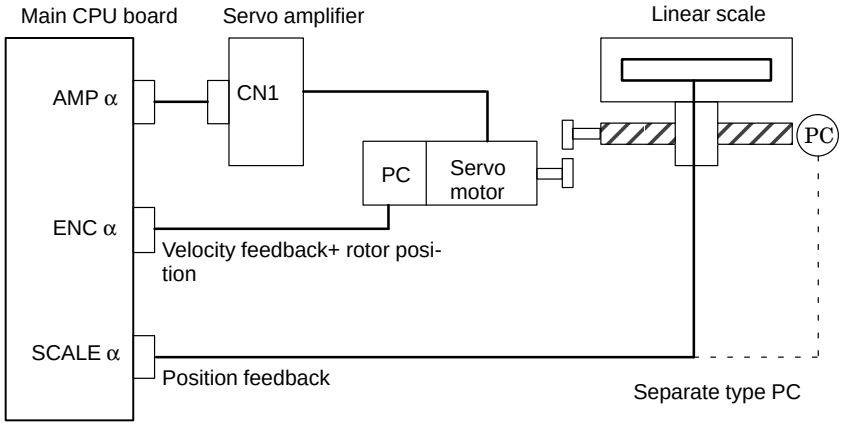

- **Connection to α series servo amplifier (Interface of type A)**

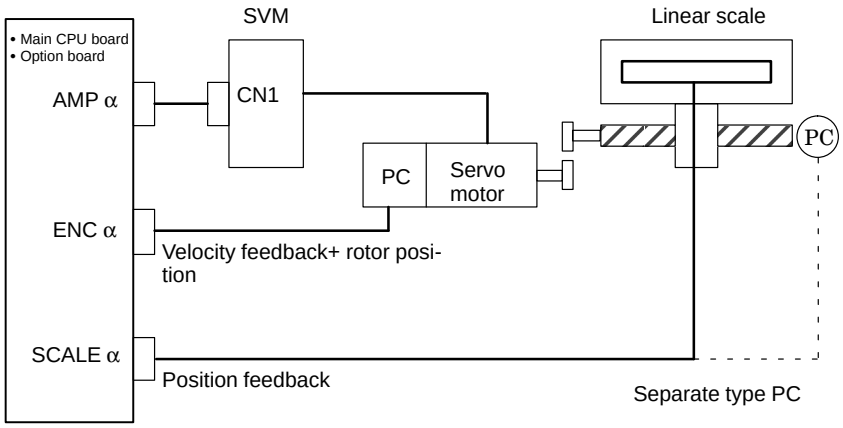

- **Connection with α series servo amplifier (Interface of type B)**

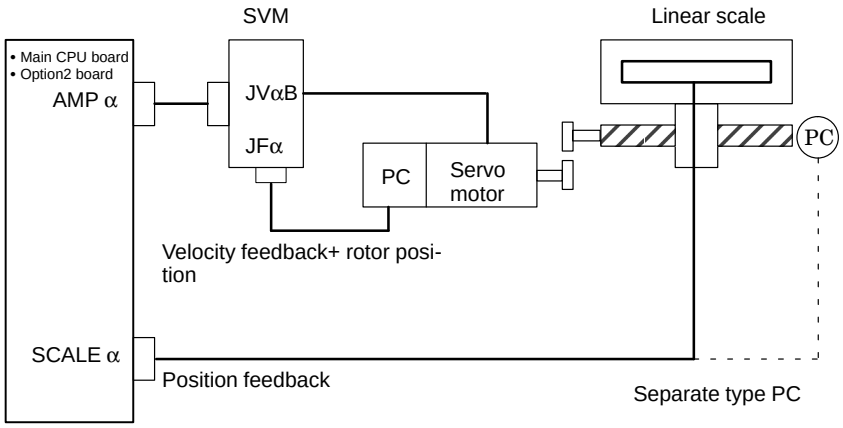

- **Associated parameters**

	#7	#6	#5	#4	#3	#2	#1	#0
1815							OPTx	

#1 (OPTx) : Separate type pulse coder of position detector is :

0 : used

1 : not used

2.4.7 Combining Serial Spindle and Analog Spindle

- **Only serial spindle is used**

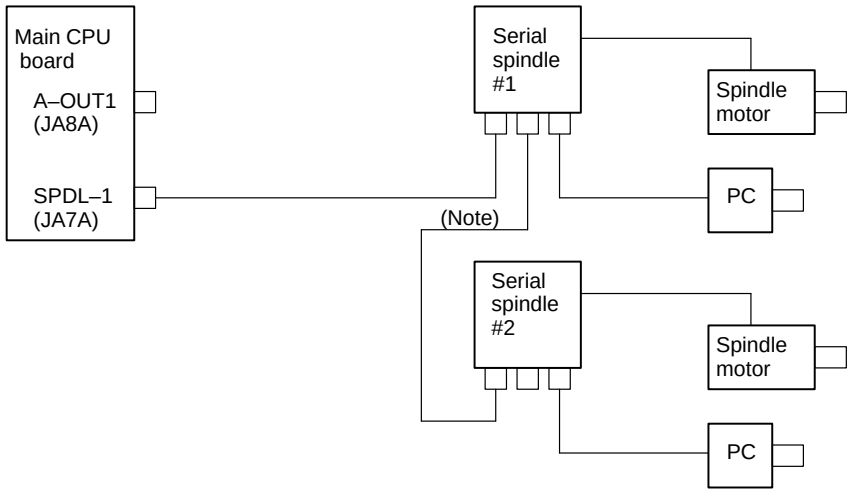

- **Only analog spindle is used**

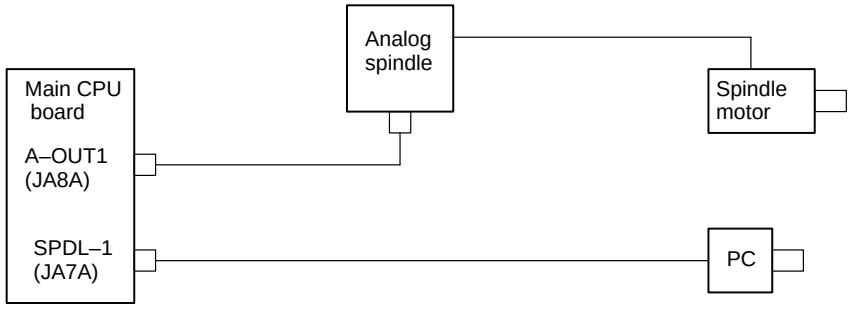

- **Serial spindle and analog spindle are used**

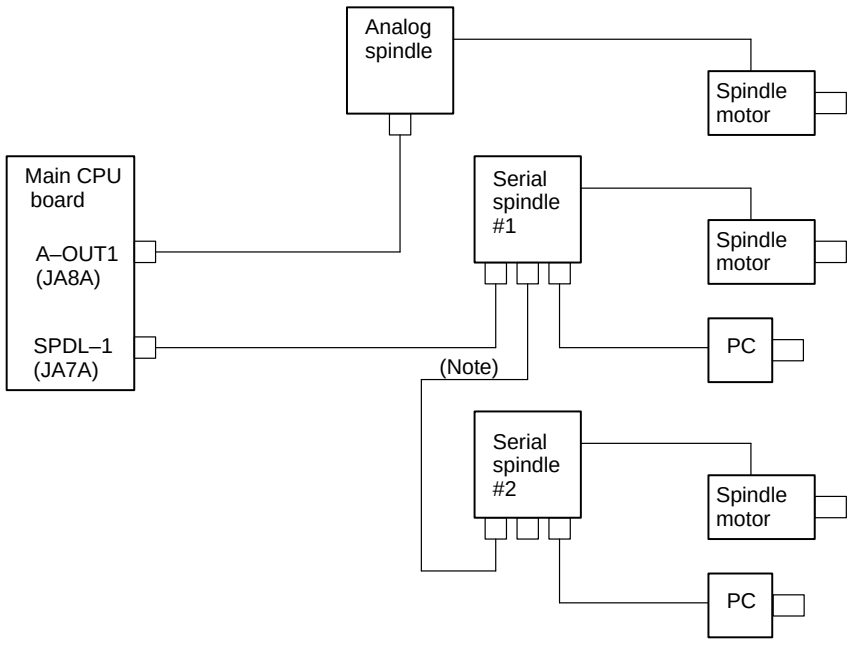

Note
When a serial spindle amplifier is used, an optical I/O link adapter must be used to connect the main CPU board to the spindle amplifier. When the α series spindle amplifier is used, the main CPU board and spindle amplifier must be connected using a metallic cable.

2.4.8 Connection to α serial Spindle Amplifier

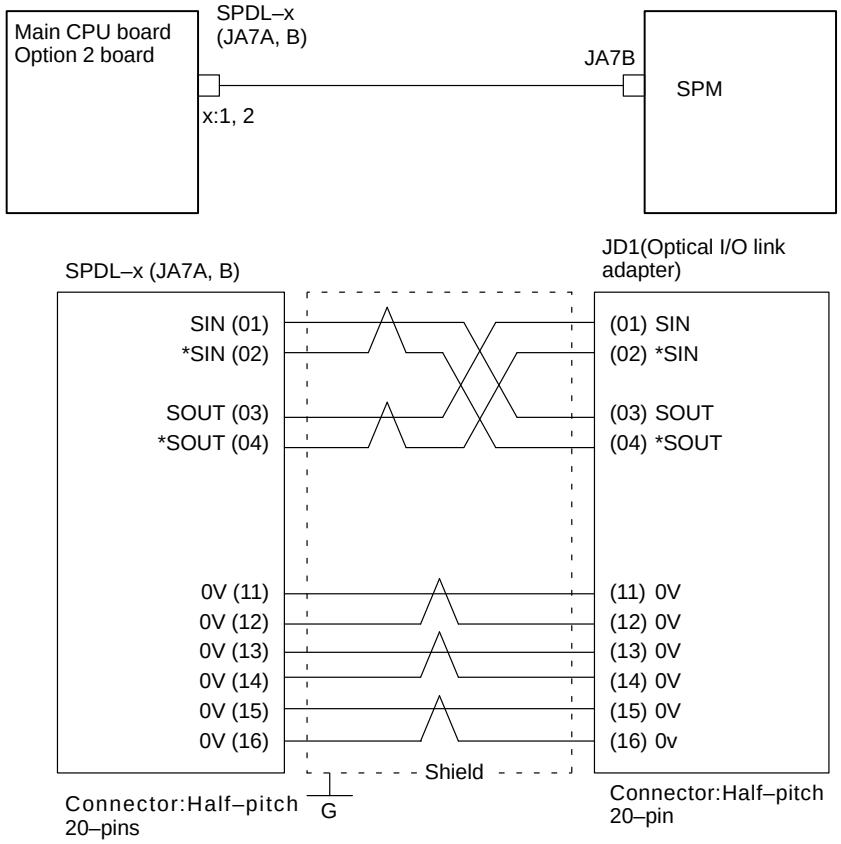

Recommended cable:A66L–0001–0284#10P(#28AWG × 10pairs)

2.4.9 Connection to Serial Spindle Amplifier

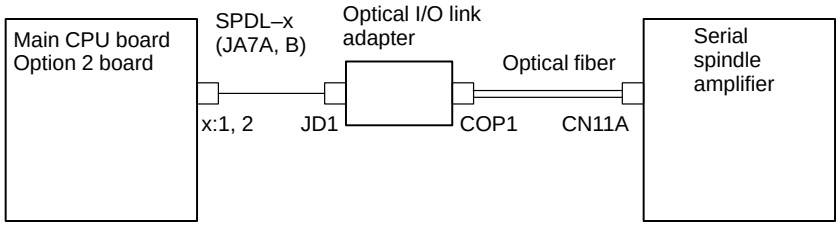

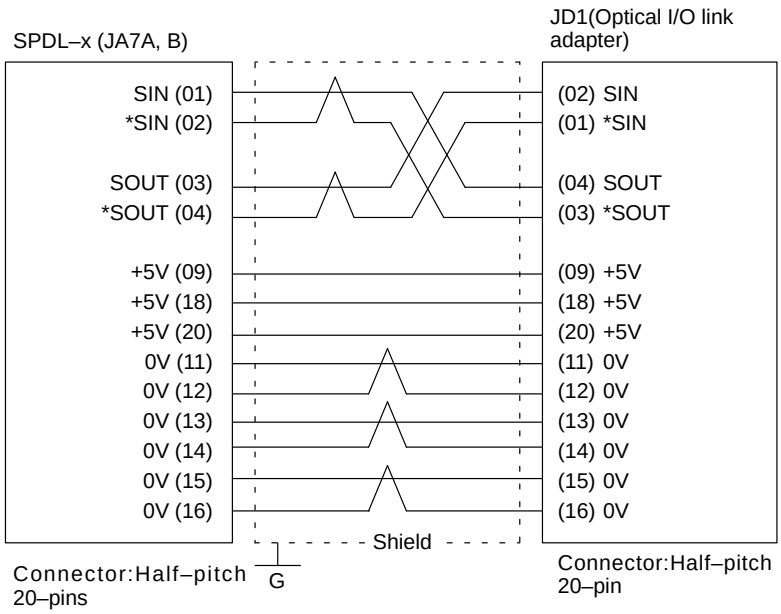

Recommended cable:A66L–0001–0284#10P(#28AWG × 10pairs)

2.4.10 Connection to Analog Spindle Amplifier

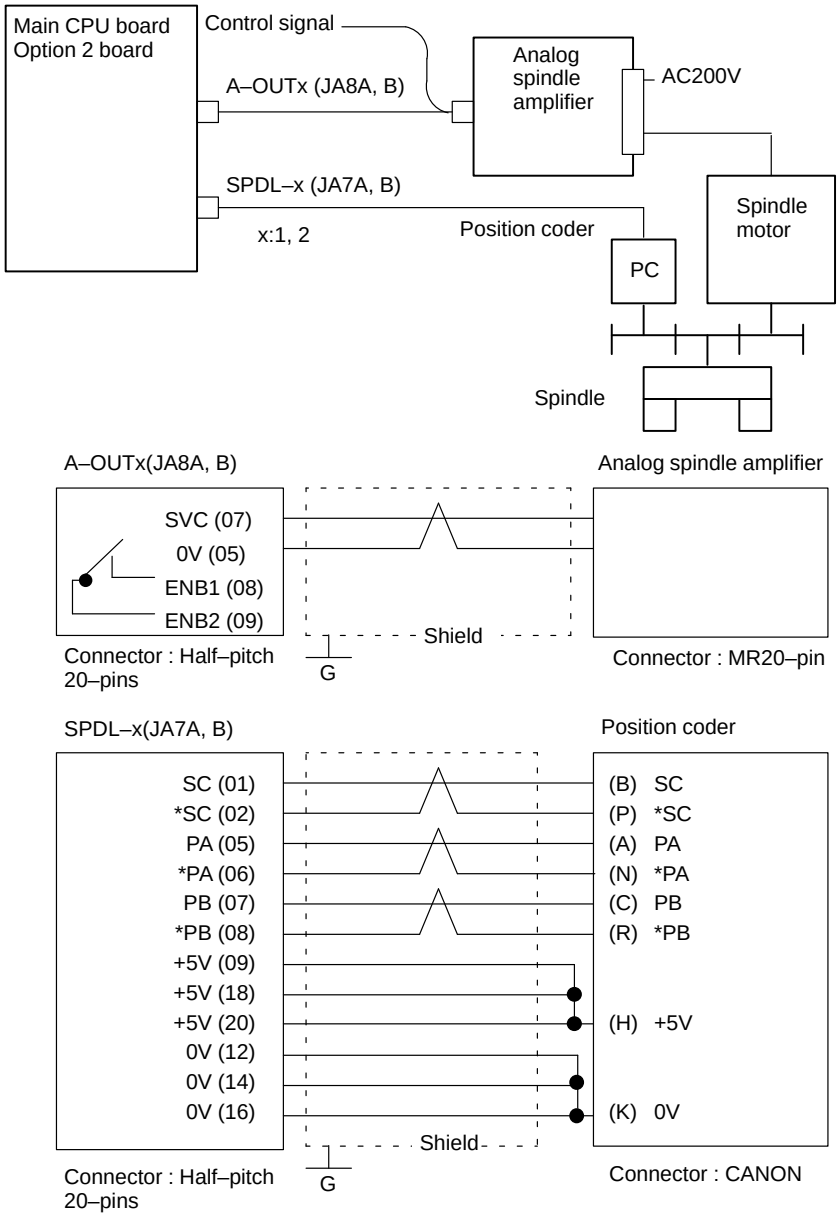

Recommended cable : A66L–0001–0286(#20AWG × 3 pairs, Max.20m)

2.4.11 Remote Buffer Interface

- **Connection**

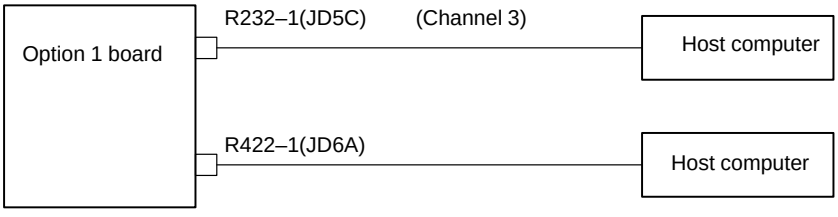

- **Example of cable connection**

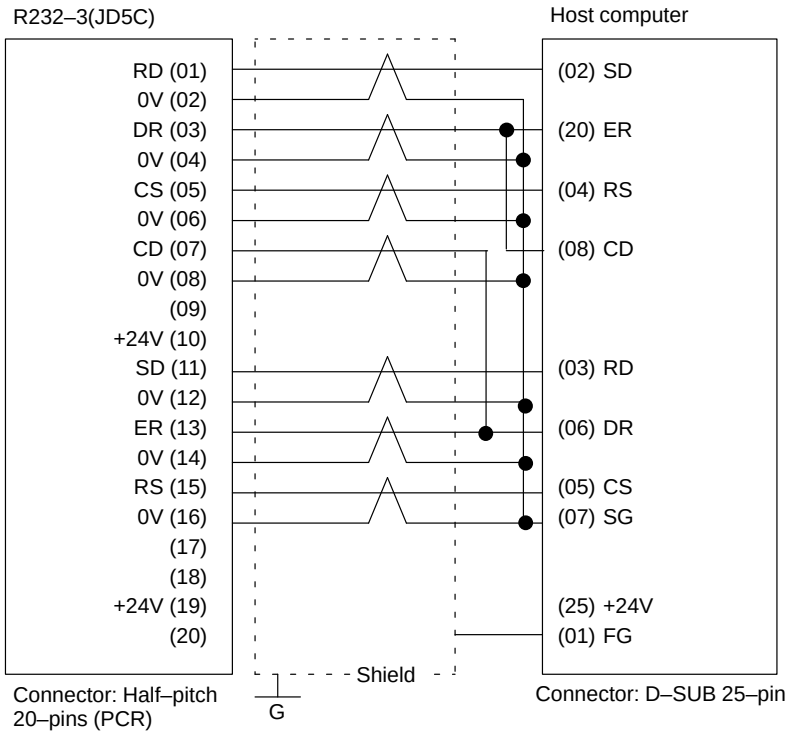

Notes
1 Connect RS when CS is not used.
2 Connect as follows when protocol A or extended protocol A is used:
  a) Connect to ER when DR is not used.
  b) Always connect CD to ER

- **Example of RS–422 cable**

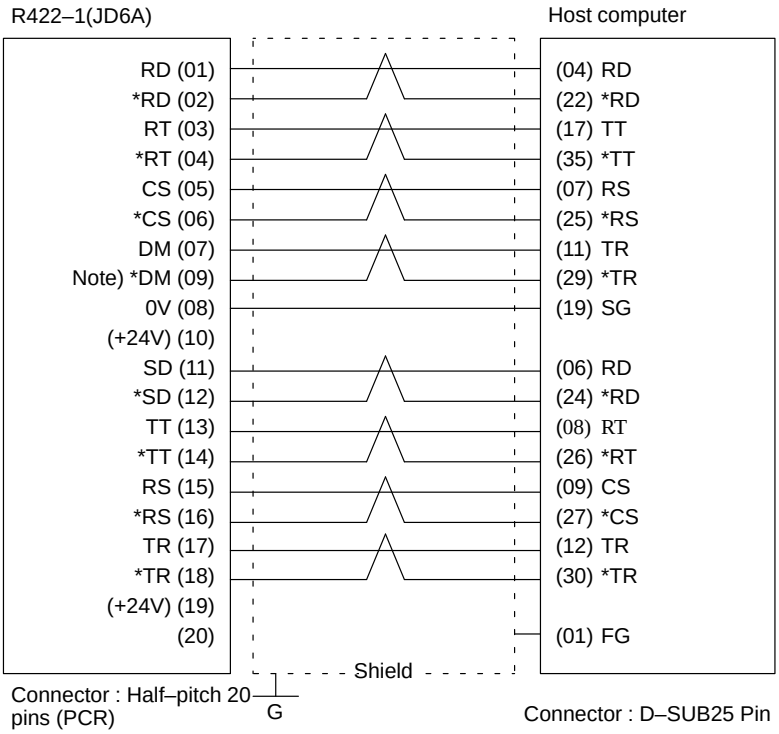

Note
Be sure to use the twisted pair cable. Note that pin arrangement of *DM signal on NC side is not regular to escape from damage due to wrong connection.

2.4.12 High–speed DI Signal Interface

- **Connection diagram**

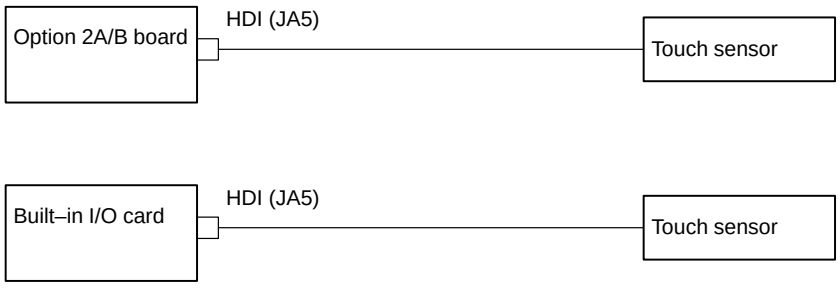

- **Connection details**

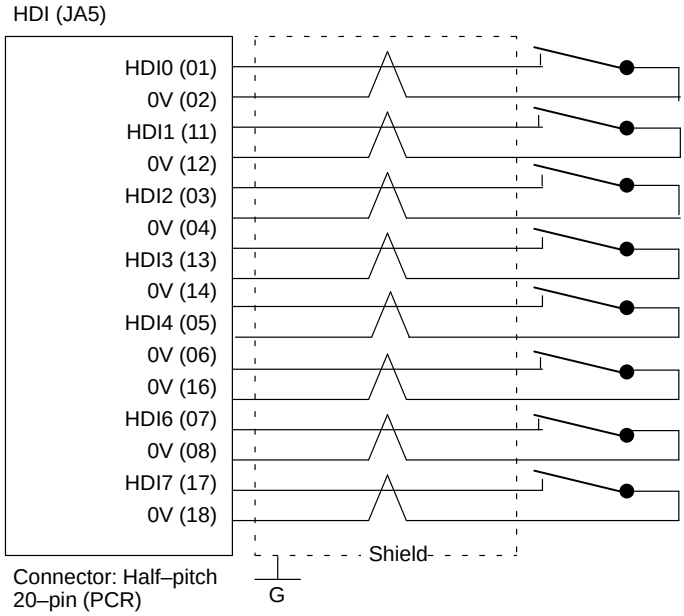

Parameter 6200 and 6202 decide which signals are used for the high speed skip signal.

2.4.13 Analog signal interface

CNC OPTION 2

JA6
(PCR-EV20MDT)

1	AIN0	11	AIN1
2	0V	12	0V
3	AIN2	13	AIN3
4	0V	14	0V
5	AOUT	15	
6	0V	16	0V
7		17	
8		18	
9		19	
10		20	

Cable connection

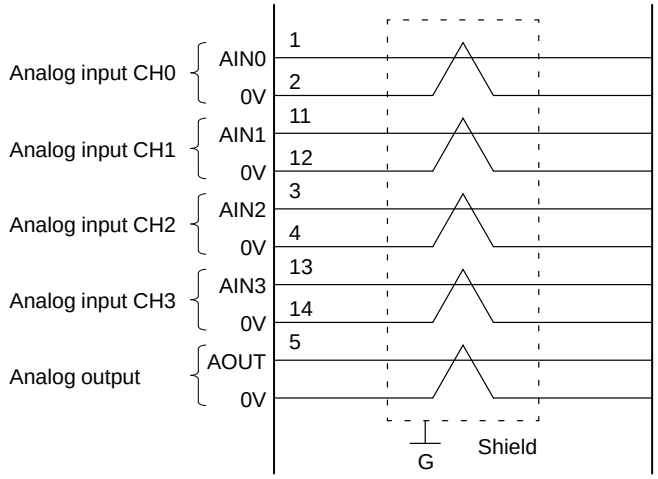

- **Receiver circuit**

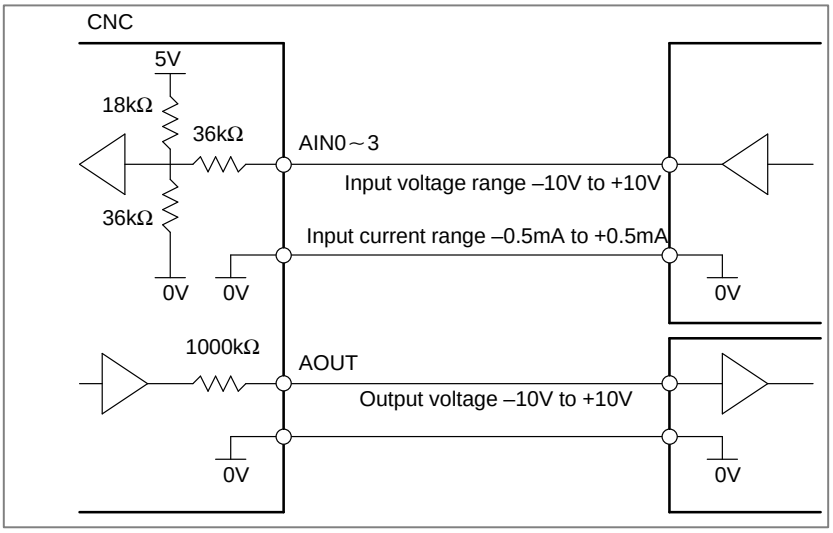

2.4.14 Environmental Requirement

The peripheral units, such as the control unit and CRT/MDI, have been designed on the assumption that they are housed in closed cabinets. In this manual “cabinet” refers to the following:

(1) Cabinet manufactured by the machine tool builder for housing the control unit or peripheral units;

(2) Cabinet for housing the flexible turnkey system provided by FANUC:

(3) Operation pendant, manufactured by the machine tool builder, for housing the CRT/MDI unit or operator’s panel ;

(4) Equivalent to the above.

The environmental conditions when installing these cabinets shall conform to the following table.

Room temperature	In operation 0° to 45° In storage or transportation –20° to 60°
Change in temperature	1.1°C/minute max.
Relative humidity	Normal : 75% or less Temporary (with 1 month) : 95% or less
Vibration	In operation : 0.5 G or less
Environment	Normal machine shop environment (The environment must be considered if the cabinets are in a location where the density of dust, coolant, and/or organic solvent is relatively high.)

2.4.15 Power Capacity

The power capacity of the CNC control unit, which in this section means the specification required for the power supply, is obtained by adding the power capacity of the control section and the power capacity of the servo section.

Power capacity of the control section	When the control unit has four slots or less, and power supply AI is used.	0.4KVA
	When the control unit has six or more slots, or power supply BI is used.	1KVA
Power capacity of the servo section	Depends on servo motor type.	

2.4.16 Action Against Noise

The CNC has been steadily reduced in size using surface–mount and custom LS1 technologies for electronic components. The CNC also is designed to be protected from external noise. However, it is difficult to measure the level and frequency of noise quantitatively, and noise has many uncertain factors. It is important to prevent both noise from being generated and generated noise from being introduced into the CNC. This precaution improves the stability of the CNC machine tool system.

The CNC component units are often installed close to the parts generating noise in the power magnetics cabinet. Possible noise sources into the CNC are capacitive coupling, electromagnetic induction, and ground loops.

When designing the power magnetics cabinet, guard against noise in the machine as described in the following:

- **Separating signal lines**

The cables used for the CNC machine tool are classified as listed in the following table :
Bind the cables in each group as described in the action column.

Group	Signal line	Action
A	Primary AC power line	Bind the cables in group A separately (Note 1) from groups B and C or cover group A with an electromagnetic shield (Note 2). Connect spark killers or diodes with the solenoid and relay.
	Secondary AC power line	
	AC/DC power lines (containing the power lines for the servo and spindle motors)	
	AC/DC solenoid	
	AC/DC relay	
B	DC solenoid (24VDC)	Connect diodes with DC solenoid and relay. Bind the cables in group B separately from group A or cover group B with an electromagnetic shield. Separate group B as far from group C as possible. It is more desirable to cover group B with the shield.
	DC relay (24 VDC)	
	DI/DO cable between the CNC and power magnetics cabinet	
	DI/DO cable between the CNC and machine	
C	Cable between the CNC and servo amplifier	Bind the cables in group C separately from group A or cover group C with an electromagnetic shield. Separate group C as far from group B as possible. Be sure to perform shield processing
	Cable for position and velocity feedback	
	Cable between the CNC and spindle amplifier	
	Cable for the position coder	
	Cable for the manual pulse generator	
	Cable between the CRT and MDI	
	RS232C and RS422 interface cables	
	Cable for the battery	
	Other cables to be covered with the shield	

Notes
1 The groups must be 10 cm or more apart from one another when binding the cables in each group.
2 The electromagnetic shield refers to shielding between groups with grounded steel plates.

● Ground

The following ground systems are provided for the CNC machined tool:

1. Signal ground system (SG)
   The signal ground (SG) supplies the reference voltage (0V) of the electrical signal system to the machine.
2. Frame ground system (FG)
   The frame ground system (FG) is used for safety, and suppressing external and internal noises. In the frame ground system, the frames and cases of the units, panels, and shields for the interface cables between the units are connected.
3. System ground system
   The system ground system is used to connect the frame ground systems connected between devices or units with the ground. Notes on connecting the ground systems

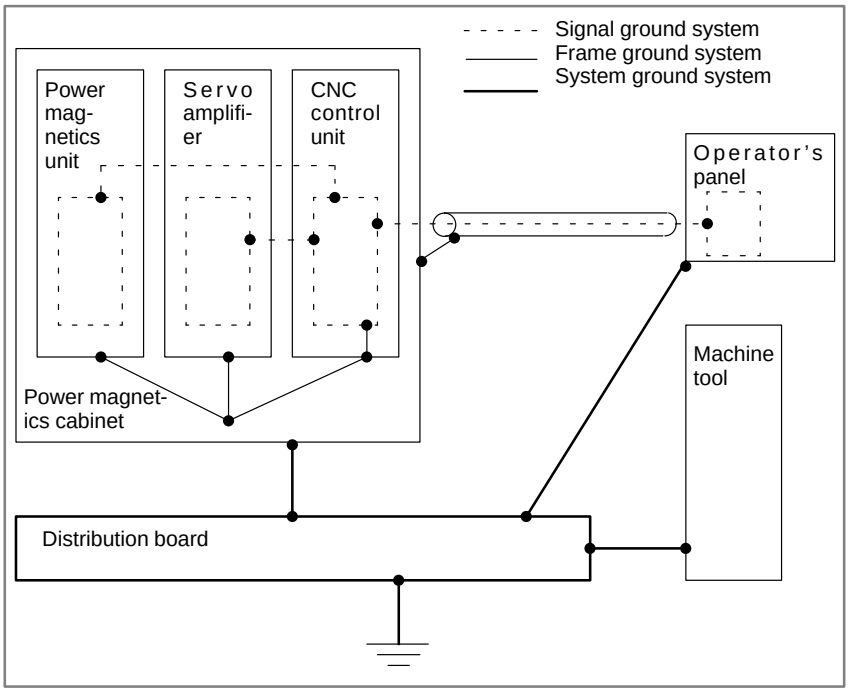

- Connect the signal gournd with the frame ground (FG) at only one place in the CNC control unit.
- The grounding resistance of the system gorund shall be 100 ohms or less (class 3 grounding).
- The system ground cable must have enough cross–sectional area to safely carry the accidental current flow into the system gound when an accident such as a short circuit occurs.
  (Generally, it must have the cross–sectional area of the AC power cable or more.)
- Use the cable containing the AC power wire and the system gound wire so that power is supplied with the ground wire connected.

- **Connecting the signal ground (SG) of the control unit**

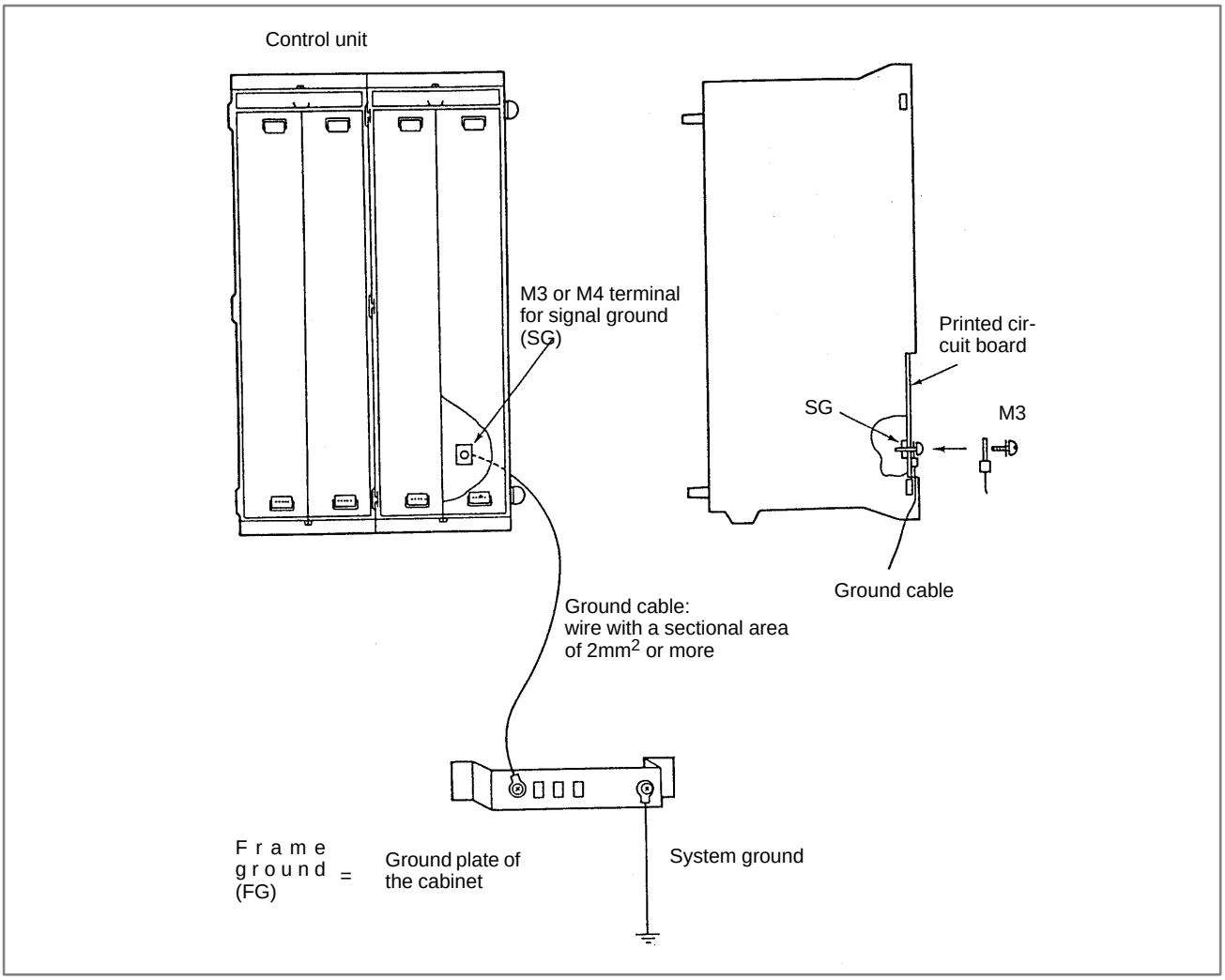

Connect the 0 V line of the electronic circuit in the control unit with the ground plate of the cabinet via the signal ground (SG) terminal.
The SG terminal is located on the printed circuit board at the rear of the control unit.

● Noise suppressor

The AC/DC solenoid and relay are used in the power magnetics cabinet. A high pulse voltage is caused by coil inductance when these devices are turned on or off.
This pulse voltage induced through the cable causes the electronic circuits to be disturbed.
To reduce the pulse voltage, use a spark killer for an AC device or a diode for a DC device.

Notes on selecting the spark killer

Use a spark killer consisting of a resistor and capacitor in series. This type of spark killer is called a CR spark killer.
(A varistor is useful in clamping the peak voltage of the pulse voltage, but cannot suppress the sudden rise of the pulse voltage. FANUC therefore recommends a CR spark killer.)
The reference capacitance and resistance of the spark killer shall conform to the following based on the current (1(A)) and DC resistance of the stationary coil :

1) Resistance (R):Equivalent to DC resistance of the coil
2) Capacitance (C): $\frac{I^2}{10} - \frac{I^2}{20}$ *(μF)*

Equivalent circuit of the spark killer

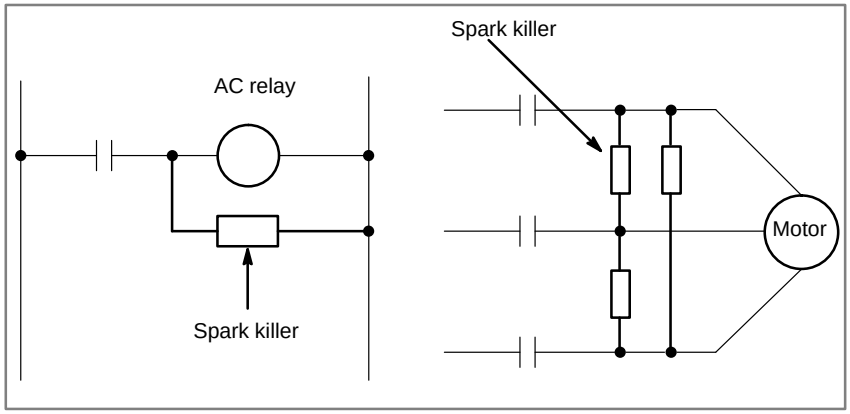

● Cable clamp and shield processing

The CNC cables that required shielding should be clamped by the method shown below. This cable clamp treatment is for both cable support and proper grounding of the shield. To insure stable CNC system operation, follow this cable clamp method.
Partially peel out the sheath and expose the shield. Push and clamp by the plate metal fittings for clamp at the part. Metal fittings for clamp are attached to the control unit. The ground plate must be made by the machine tool builder, and set as follows:

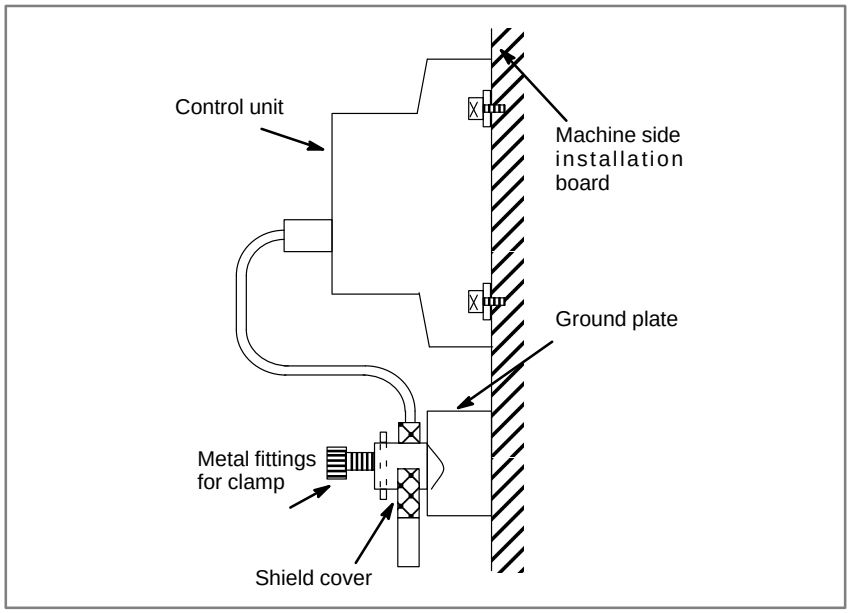
Control unit
Machine side installation board
Ground plate
Metal fittings for clamp
Shield cover

2.5 LED DISPLAY AND MODULE CONFIGURATION OF PCB

2.5.1 Power supply unit

Name	Code
Power supply unit AI	A16B–1212–0900 A16B–1212–0901
Power supply unit BI	A16B–1212–0870 A16B–1212–0871
Power supply unit C	A20B–1005–0420

- **LED display**

PIL(Green)	This LED is lit when the input AC power voltage is supplied to CP1.
ALM(Red)	This LED is lit when overcurrent,overvoltage, or low voltage occurs in direct current output voltage.

- **Disposition of Connector, etc.**
- **In case of Power supply AI and BI**

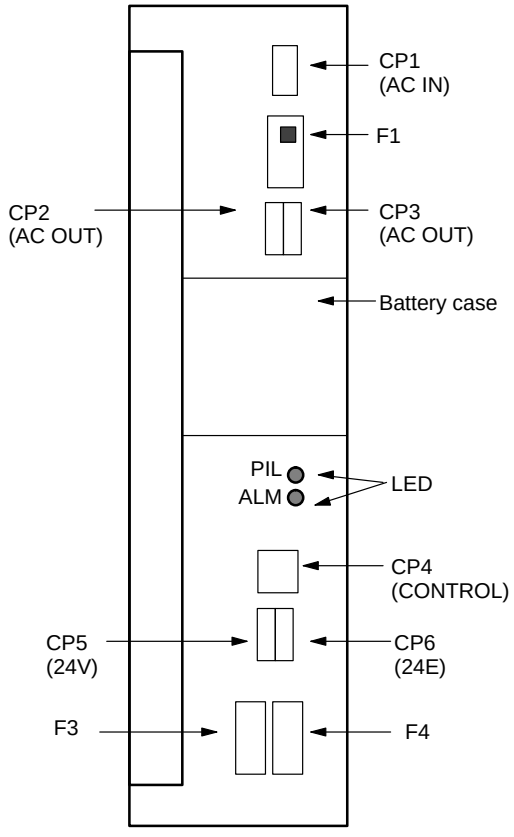

Locations of connectors and fuses

- **In case of power supply C**

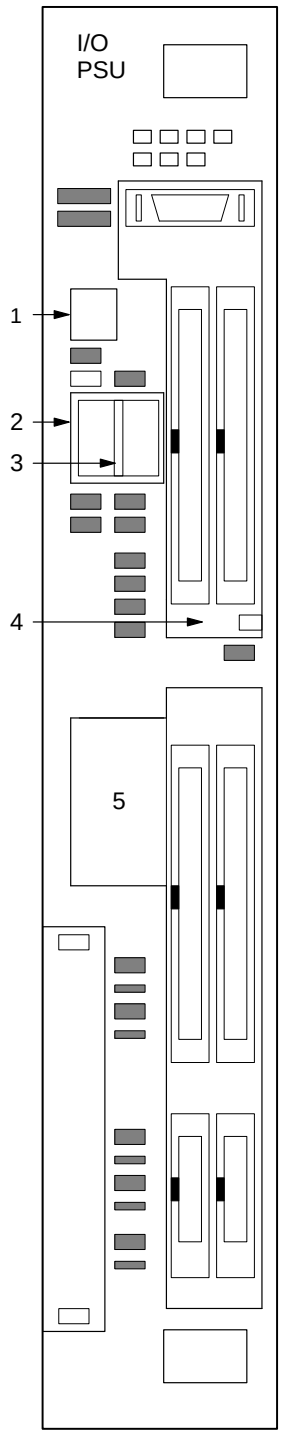

	Function	Abbreriation	Connector number
1	Fuse		
2	24 V Input	DC IN	CP1A
3	24 V Output	DC OUT	CP1B
4	Battery		CP8
5	Battery case		

● Fuse

Fuses

Power supply	Ordering code	Symbol	Rating	Individual code
AI	A02B–0200–K100	F1	7.5A	A60L–0001–0245#GP75
		F3	3.2A	A60L–0001–0075#3.2
		F4	5A	A60L–0001–0046#5.0
BI	A02B–0200–K101	F1	7.5A	A60L–0001–0245#GP75
		F3	5A	A60L–0001–0075#5.0
		F4	5A	A60L–0001–0046#5.0
C	A02B–0177–K101	–	7.5A	A60L–0001–0046#7.5R

Circuit protected by fuses

Symbol	Use
F1	200–VAC input
F3	Power supply for 9″ monochrome CRT or LCD
F4	I/O unit, etc.

● Battery

Lithium battery code : A98L–0031–0012

- **Block diagram for power supply unit (AI and BI)**

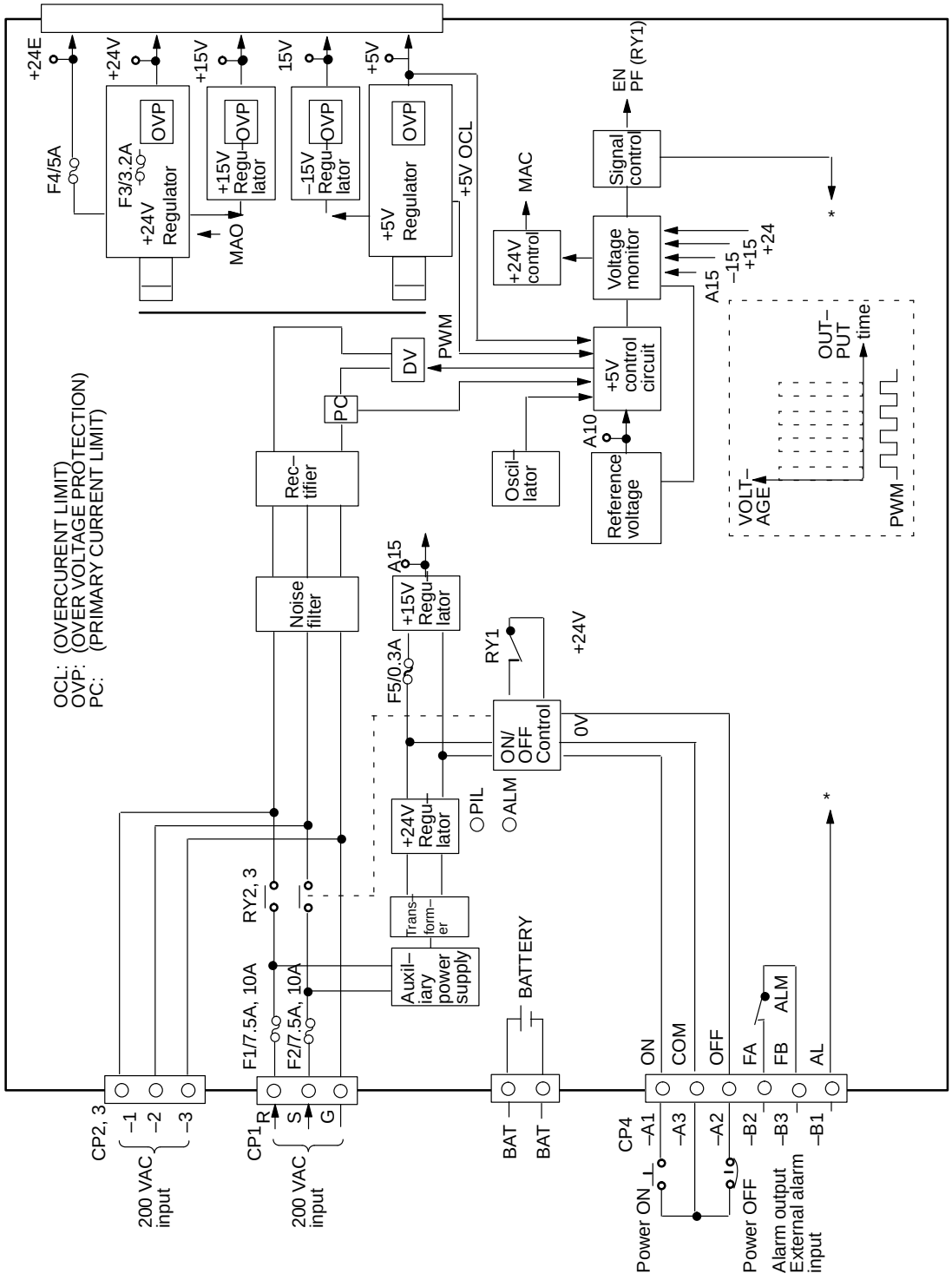

2.5.2 Main CPU Board

- **Series16 Main CPU Board**

MAIN–A·4–axis specification

Name	Code
Main CPU board	A16B–3200–0010
Main CPU board	A16B–3200–0170

MAIN–B·6–axis specification

Name	Code
Main CPU board	A16B–3200–0110

- **LED display**

1 LED status in power on routine (Green LED)
□:OFF ■:ON

STATUS □□□□	Power OFF
STATUS ■■■■	Initial status after power on (CPU is not run yet)
STATUS ■□■■	Waiting for other CPU's answer (ID setting)
STATUS □□■■	Detect other CPU's answer (Finished of ID setting)
STATUS ■■□■	FANUC BUS initialized
STATUS □■□■	PMC initialization (1) finished
STATUS ■□□■	All PCBs configuration finished
STATUS ■■■□	PMC initial running finished (PMC–RB only)
STATUS □■■□	Waiting for digital servo initialization
STATUS ■□□□	All initialized, running

2 LED status in power of alarm □:OFF ■:ON ×:Don's care

STATUS □■□□ ALARM ■■□	RAM parity alarm occured in main CPU board or servo alarm occured in OPTION–2 board
STATUS □■□□ ALARM □■■	Servo alarm (watch dog alarm) occured
STATUS □■□□ ALARM □■□	Other system alarm occured
STATUS ■■■■ ALARM ×■×	The system is stopped before the CPU is activated

3 LED display when the system, fitted with option 2 board (with sub–CPU), is not started □:OFF ■:ON

STATUS ■■□□ ALARM □□□	An error occurred in the BASIC SRAM of the option 2 board (with sub–CPU). Replace the option 2 board.

● ● Location of modules
A16B–3200–0010

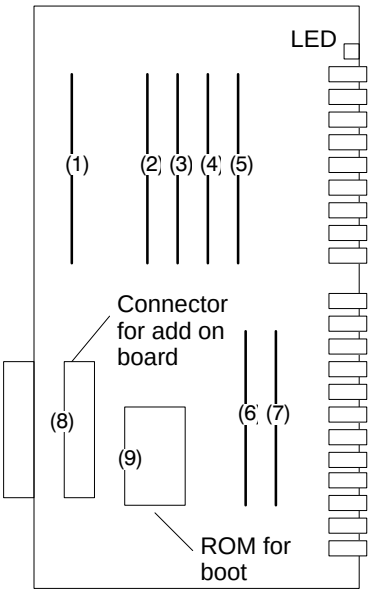

Connector name	Connector number	Use
CRT	JA1	CRT video signal
MDI	JA2	MDI keyboard
R232–1	JD5A	RS–232–C serial port
R232–2	JD5B	RS–232–C serial port
MPG	JA3	Manual pulse generator
IOLINK	JD1A	FANUC I/O LINK
SPDL–1	JA7A	Serial spindle
A–OUT1	JA8A	Analog output
APCBAT	JA4A	Battery for use with the APC
AMP1	JV1	Axis 1 servo amplifier
AMP2	JV2	Axis 2 servo amplifier
AMP3	JV3	Axis 3 servo amplifier
AMP4	JV4	Axis 4 servo amplifier
ENC1	JF1	Axis 1 pulse coder
ENC2	JF2	Axis 2 pulse coder
ENC3	JF3	Axis 3 pulse coder
ENC4	JF4	Axis 4 pulse coder
SCALE1	JF21	Axis 1 scale
SCALE2	JF22	Axis 2 scale
SCALE3	JF23	Axis 3 scale
SCALE4	JF24	Axis 4 scale

No.	Name	Specifications	Function	Display of system configuration screen
(1)	FROM module	A20B–2902–0080	CNC system, servo system, graphic system, Additional SRAM	FLASH ROM MODULE: 4MB ADDITIONAL SRAM: 512KB
		A20B–2902–0081		FLASH ROM MODULE: 4MB
		A20B–2902–0082		FLASH ROM MODULE: 2MB
		A20B–2902–0090		FLASH ROM MODULE: 8MB ADDITIONAL SRAM: 2MB
		A20B–2902–0091		FLASH ROM MODULE: 8MB
		A20B–2902–0092		FLASH ROM MODULE: 6MB
		A20B–2902–0093		FLASH ROM MODULE: 8MB ADDITIONAL SRAM: 512KB
		A20B–2902–0094		FLASH ROM MODULE: 6MB ADDITIONAL SRAM: 512KB
(2)	DRAM module	A20B–2901–0940	RAM for the CNC system	RAM: 6MB
		A20B–2901–0941		RAM: 4MB
		A20B–2901–0942		RAM: 2MB
(3)	PMC module	A20B–2901–0960	PMC control	PMC MODULE: PMP2 + SLC
		A20B–2901–0961		PMC MODULE: PMP2
(4)	CRTC module	A20B–2902–0270	CRT text display control	CRTC MODULE: 14″ CRT
		A20B–2902–0271		CRTC MODULE: 9″ CRT
		A20B–2902–0272		CRTC MODULE: VGA
		A20B–2902–0273		CRTC MODULE: 14″ CRT
		A20B–2902–0275		CRTC MODULE: VGA
		A20B–2902–0276		CRTC MODULE: 9″ CRT
		A20B–2902–0277		CRTC MODULE: 9″ CRT
		A20B–2902–0278		CRTC MODULE: VGA
(5)	Spindle module	A20B–2901–0980	Spindle control	SERIAL SPINDLE LSI ANALOG SPINDLE LSI
		A20B–2901–0981		SERIAL SPINDLE LSI
		A20B–2901–0982		ANALOG SPINDLE LSI

No.	Name	Specifications	Function	Display of system configuration screen
(6)	Servo module	A20B–2902–0060 A20B–2902–0061	Servo control 3 or 4 axis	SERVO 3/4 AXIS
(7)	Servo module	A20B–2902–0060 A20B–2902–0061	Servo control 1 or 2 axis	SERVO 1/2 AXIS

Add on board

No.	Name	Specifications	Function	Display of system configuration screen
(8)	Graphic function board	A20B–8200–0010 A20B–8200–0011	Graphic display control	GRAPHIC ENGINE FUNCTION

- **Location of modules**
  A16B–3200–0170

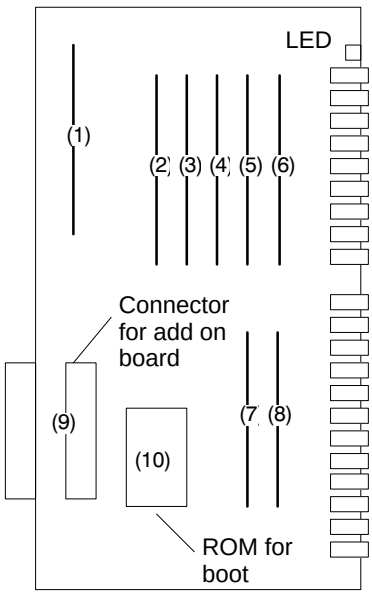

Connector name	Connector number	Use
CRT	JA1	CRT video signal
MDI	JA2	MDI keyboard
R232–1	JD5A	RS–232–C serial port
R232–2	JD5B	RS–232–C serial port
MPG	JA3	Manual pulse generator
IOLINK	JD1A	FANUC I/O LINK
SPDL–1	JA7A	Serial spindle
A–OUT1	JA8A	Analog output
APCBAT	JA4A	Battery for use with the APC
AMP1	JV1	Axis 1 servo amplifier
AMP2	JV2	Axis 2 servo amplifier
AMP3	JV3	Axis 3 servo amplifier
AMP4	JV4	Axis 4 servo amplifier
ENC1	JF1	Axis 1 pulse coder
ENC2	JF2	Axis 2 pulse coder
ENC3	JF3	Axis 3 pulse coder
ENC4	JF4	Axis 4 pulse coder
SCALE1	JF21	Axis 1 scale
SCALE2	JF22	Axis 2 scale
SCALE3	JF23	Axis 3 scale
SCALE4	JF24	Axis 4 scale

No.	Name	Specifications	Function	Display of system configuration screen
(1)	DRAM module	A20B–2901–0940	CNC system RAM	DRAM:6MB
		A20B–2901–0941		DRAM:4MB
		A20B–2901–0942		DRAM:2MB
(2)	SRAM module	A20B–2902–0350	Expanded SRAM	ADDITIONAL SRAM:256KB
		A20B–2902–0351		ADDITIONAL SRAM:768KB
		A20B–2902–0352		ADDITIONAL SRAM:2.25MB
(3)	FROM module	A20B–2902–0341	CNC system, Servo system Graphic system, SRAM for system	FLASH ROM MODULE:4MB
		A20B–2902–0343		FLASH ROM MODULE:2MB
		A20B–2902–0410		FLASH ROM MODULE:8MB
		A20B–2902–0411		FLASH ROM MODULE:6MB
(4)	PMC module	A20B–2901–0960	PMC control	PMC MODULE:PMP2+SLC
		A20B–2901–0961		PMC MODULE:PMP2
(5)	CRTC module	A20B–2902–0270	CRT text display control	CRTC MODULE:14”CRT
		A20B–2902–0271		CRTC MODULE:9”CRT
		A20B–2902–0272		CRTC MODULE:VGA
		A20B–2902–0273		CRTC MODULE:14”CRT
		A20B–2902–0275		CRTC MODULE:VGA
		A20B–2902–0276		CRTC MODULE:9”CRT
		A20B–2902–0277		CRTC MODULE:9”CRT
		A20B–2902–0278		CRTC MODULE:VGA
(6)	Spindle module	A20B–2901–0980	Spindle control	SERIAL SPINDLE LSI ANALOG SPINDLE LSI
		A20B–2901–0981		SERIAL SPINDLE LSI
		A20B–2901–0982		ANALOG SPINDLE LSI
(7)	Servo module	A20B–2902–0060	Servo control 3rd or 4th axis	SERVO 3/4 AXIS
		A20B–2902–0061		
(8)	Servo module	A20B–2902–0060	Servo control 1st or 2nd axis	SERVO 1/2 AXIS
		A20B–2902–0061		

Add on board

No.	Name	Specifications	Function	Display of system configuration screen
(8)	Graphic function board	A20B–8200–0010	Graphic display control	GRAPHIC ENGINE FUNCTION
		A20B–8200–0011		

- **Location of modules**
  A16B–3200–0110
  (Total version of PC board is 04A or older)

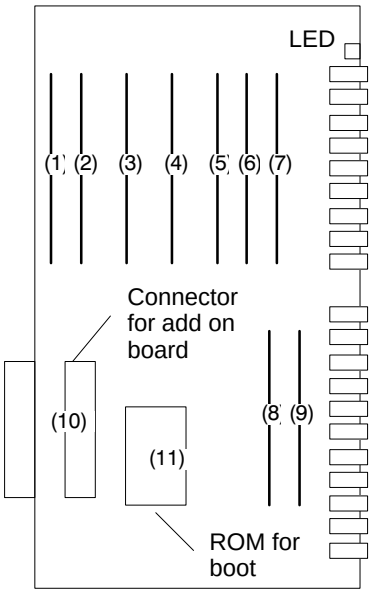

Connector name	Connector number	Use
CRT	JA1	CRT video signal
MDI	JA2	MDI keyboard
R232–1	JD5A	RS–232–C serial port
R232–2	JD5B	RS–232–C serial port
MPG	JA3	Manual pulse generator
IOLINK	JD1A	FANUC I/O LINK
SPDL–1	JA7A	Serial spindle
A–OUT1	JA8A	Analog output
APCBAT	JA4A	Battery for use with the APC
SERVO1	JS1A	Axis 1 servo amplifier
SERVO2	JS2A	Axis 2 servo amplifier
SERVO3	JS3A	Axis 3 servo amplifier
SERVO4	JS4A	Axis 4 servo amplifier
SERVO5	JS5A	Axis 5 servo amplifier
SERVO6	JS6A	Axis 6 servo amplifier
SCALE1	JF21	Axis 1 scale
SCALE2	JF22	Axis 2 scale
SCALE3	JF23	Axis 3 scale
SCALE4	JF24	Axis 4 scale
SV–CHK	JA26	SERVO CHECK

No.	Name	Specifications	Function	Display of system configuration screen
(1)	SRAM module	A20B–2902–0350	Expanded SRAM	ADDITIONAL SRAM:256KB
		A20B–2902–0351		ADDITIONAL SRAM:768KB
		A20B–2902–0352		ADDITIONAL SRAM:2.25MB
(2)	FROM module	A20B–2902–0341	CNC system, Servo system Graphic system, SRAM for system	FLASH ROM MODULE:4MB
		A20B–2902–0343		FLASH ROM MODULE:2MB
(3)	DRAM module	A20B–2901–0940	CNC system RAM	DRAM:6MB
		A20B–2901–0941		DRAM:4MB
		A20B–2901–0942		DRAM:2MB
(4)	PMC module	A20B–2901–0960	PMC control	PMC MODULE:PMP2+SLC
		A20B–2901–0961		PMC MODULE:PMP2
(5)	CRTC module	A20B–2902–0270	CRT text display control	CRTC MODULE:14”CRT
		A20B–2902–0271		CRTC MODULE:9”CRT
		A20B–2902–0272		CRTC MODULE:VGA
		A20B–2902–0273		CRTC MODULE:14”CRT
		A20B–2902–0275		CRTC MODULE:VGA
		A20B–2902–0276		CRTC MODULE:9”CRT
		A20B–2902–0277		CRTC MODULE:9”CRT
		A20B–2902–0278		CRTC MODULE:VGA
(6)	Spindle module	A20B–2901–0980	Spindle control	SERIAL SPINDLE LSI ANALOG SPINDLE LSI
		A20B–2901–0981		SERIAL SPINDLE LSI
		A20B–2901–0982		ANALOG SPINDLE LSI
(7)	Servo module	A20B–2902–0060	Servo control 1st or 2nd axis	SERVO 1/2 AXIS
		A20B–2902–0061		
(8)	Servo module	A20B–2902–0060	Servo control 5th or 6th axis	SERVO 5/6 AXIS
		A20B–2902–0061		
(9)	Servo module	A20B–2902–0060	Servo control 3rd or 4th axis	SERVO 3/4 AXIS
		A20B–2902–0061		

Add on board

No.	Name	Specifications	Function	Display of system configuration screen
(8)	Graphic function board	A20B–8200–0010	Graphic display control	GRAPHIC ENGINE FUNCTION
		A20B–8200–0011		

- **Series18 Main CPU Board**

MAIN–B 4–axis specification

Name	Code
Main CPU board	A16B–2202–0860

MAIN–B 6–axis specification

Name	Code
Main CPU board	A16B–3200–0160

- **LED display**

LED display is same as Series 16. See P130.

- **Location of modules A16B–2202–0860**

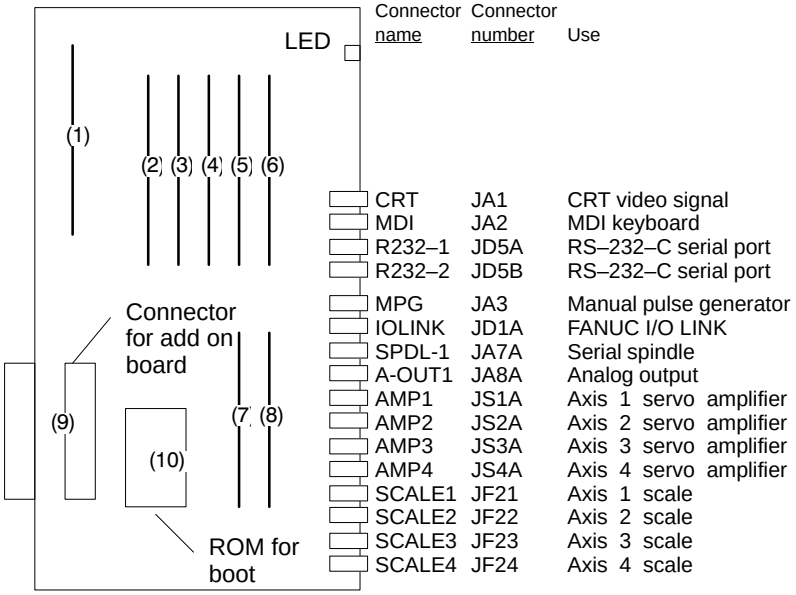

Connector name	Connector number	Use
CRT	JA1	CRT video signal
MDI	JA2	MDI keyboard
R232–1	JD5A	RS–232–C serial port
R232–2	JD5B	RS–232–C serial port
MPG	JA3	Manual pulse generator
IOLINK	JD1A	FANUC I/O LINK
SPDL-1	JA7A	Serial spindle
A-OUT1	JA8A	Analog output
AMP1	JS1A	Axis 1 servo amplifier
AMP2	JS2A	Axis 2 servo amplifier
AMP3	JS3A	Axis 3 servo amplifier
AMP4	JS4A	Axis 4 servo amplifier
SCALE1	JF21	Axis 1 scale
SCALE2	JF22	Axis 2 scale
SCALE3	JF23	Axis 3 scale
SCALE4	JF24	Axis 4 scale

No.	Name	Specifications	Function	Display of system configuration screen
(1)	DRAM module	A20B–2901–0940	CNC system RAM	DRAM:6MB
		A20B–2901–0941		DRAM:4MB
		A20B–2901–0942		DRAM:2MB
(2)	SRAM module	A20B–2902–0350	Expanded SRAM	ADDITIONAL SRAM:256KB
		A20B–2902–0351		ADDITIONAL SRAM:768KB
		A20B–2902–0352		ADDITIONAL SRAM:2.25MB
(3)	FROM module	A20B–2902–0341	CNC system, Servo system Graphic system, SRAM for system	FLASH ROM MODULE:4MB
		A20B–2902–0343		FLASH ROM MODULE:2MB
		A20B–2902–0410		FLASH ROM MODULE:8MB
		A20B–2902–0411		FLASH ROM MODULE:6MB
(4)	PMC module	A20B–2901–0960	PMC control	PMC MODULE:PMP2+SLC
		A20B–2901–0961		PMC MODULE:PMP2
(5)	CRTC module	A20B–2902–0270	CRT text display control	CRTC MODULE:14”CRT
		A20B–2902–0271		CRTC MODULE:9”CRT
		A20B–2902–0272		CRTC MODULE:VGA
		A20B–2902–0273		CRTC MODULE:14”CRT
		A20B–2902–0275		CRTC MODULE:VGA
		A20B–2902–0276		CRTC MODULE:9”CRT
		A20B–2902–0277		CRTC MODULE:9”CRT
		A20B–2902–0278		CRTC MODULE:VGA
(6)	Spindle module	A20B–2901–0980	Spindle control	SERIAL SPINDLE LSI ANALOG SPINDLE LSI
		A20B–2901–0981		SERIAL SPINDLE LSI
		A20B–2901–0982		ANALOG SPINDLE LSI
(7)	Servo module	A20B–2902–0060	Servo control 3rd or 4th axis	SERVO 3/4 AXIS
		A20B–2902–0061		
(8)	Servo module	A20B–2902–0060	Servo control 1st or 2nd axis	SERVO 1/2 AXIS
		A20B–2902–0061		

Add on board

No.	Name	Specifications	Function	Display of system configuration screen
(8)	Graphic function board	A20B–8200–0010	Graphic display control	GRAPHIC ENGINE FUNCTION
		A20B–8200–0011		

- **Location of modules**
  A16B–3200–0160

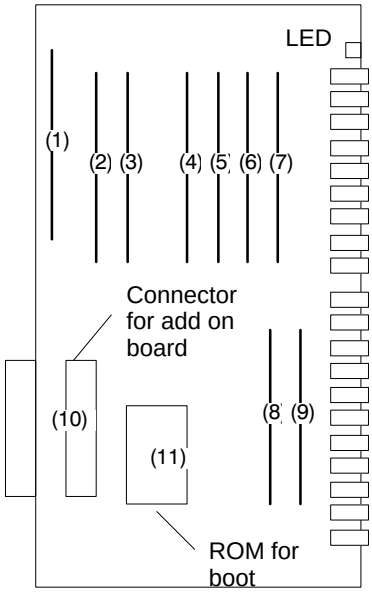

Connector name	Connector number	Use
CRT	JA1	CRT video signal
MDI	JA2	MDI keyboard
R232–1	JD5A	RS–232–C serial port
R232–2	JD5B	RS–232–C serial port
MPG	JA3	Manual pulse generator
IOLINK	JD1A	FANUC I/O LINK
SPDL–1	JA7A	Serial spindle
A–OUT1	JA8A	Analog output
APCBAT	JA4A	Battery for use with the APC
SERVO1	JS1	Axis 1 servo amplifier
SERVO2	JS2	Axis 2 servo amplifier
SERVO3	JS3	Axis 3 servo amplifier
SERVO4	JS4	Axis 4 servo amplifier
SERVO5	JS5	Axis 5 servo amplifier
SERVO6	JS6	Axis 6 servo amplifier
SCALE1	JF21	Axis 1 scale
SCALE2	JF22	Axis 2 scale
SCALE3	JF23	Axis 3 scale
SCALE4	JF24	Axis 4 scale
SV–CHK	JA26	SERVO CHECK

No.	Name	Specifications	Function	Display of system configuration screen
(1)	DRAM module	A20B–2901–0940	CNC system RAM	DRAM:6MB
		A20B–2901–0941		DRAM:4MB
		A20B–2901–0942		DRAM:2MB
(2)	SRAM module	A20B–2902–0350	Expanded SRAM	ADDITIONAL SRAM:256KB
		A20B–2902–0351		ADDITIONAL SRAM:768KB
		A20B–2902–0352		ADDITIONAL SRAM:2.25MB
(3)	FROM module	A20B–2902–0341	CNC system, Servo system Graphic system, SRAM for system	FLASH ROM MODULE:4MB
		A20B–2902–0343		FLASH ROM MODULE:2MB
		A20B–2902–0410		FLASH ROM MODULE:8MB
		A20B–2902–0411		FLASH ROM MODULE:6MB
(4)	PMC module	A20B–2901–0960	PMC control	PMC MODULE:PMP2+SLC
		A20B–2901–0961		PMC MODULE:PMP2
(5)	CRTC module	A20B–2902–0270	CRT text display control	CRTC MODULE:14”CRT
		A20B–2902–0271		CRTC MODULE:9”CRT
		A20B–2902–0272		CRTC MODULE:VGA
		A20B–2902–0273		CRTC MODULE:14”CRT
		A20B–2902–0275		CRTC MODULE:VGA
		A20B–2902–0276		CRTC MODULE:9”CRT
		A20B–2902–0277		CRTC MODULE:9”CRT
		A20B–2902–0278		CRTC MODULE:VGA
(6)	Spindle module	A20B–2901–0980	Spindle control	SERIAL SPINDLE LSI ANALOG SPINDLE LSI
		A20B–2901–0981		SERIAL SPINDLE LSI
		A20B–2901–0982		ANALOG SPINDLE LSI
(7)	Servo module	A20B–2902–0060	Servo control 1st or 2nd axis	SERVO 1/2 AXIS
		A20B–2902–0061		
(8)	Servo module	A20B–2902–0060	Servo control 5th or 6th axis	SERVO 5/6 AXIS
		A20B–2902–0061		
(9)	Servo module	A20B–2902–0060	Servo control 3rd or 4th axis	SERVO 3/4 AXIS
		A20B–2902–0061		

Add on board

No.	Name	Specifications	Function	Display of system configuration screen
(10)	Graphic function board	A20B–8200–0010	Graphic display control	GRAPHIC ENGINE FUNCTION
		A20B–8200–0011		

2.5.3 Option 1 board

Name	Specifications	Function
Option 1 board	A16B–2200–0913	Remote buffer
	A16B–2200–0914	DNC1
	A16B–2200–0919	Graphic (CAP–II)
	A16B–2200–0918	Graphic +Remote buffer
	A16B–2200–0916	Graphic + DNC1

● LED display

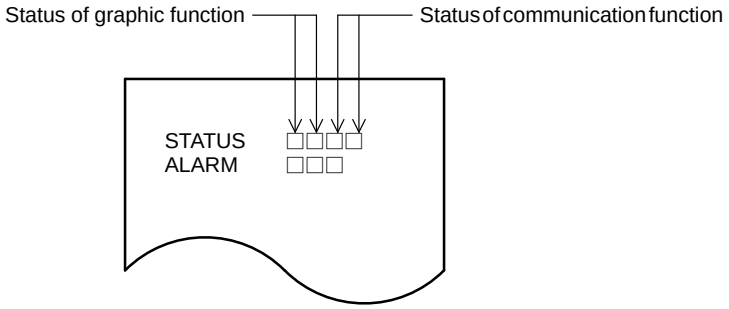

· Graphic function with CAP–II

□:OFF, ■:ON, ×:Don't care ☆:Blink

STATUS ■■■■ ALARM ■□□	Initial status after power on (CPU is not run yet)
STATUS □■×× ALARM □□□	Initial status after power on (CPU is not run yet)
STATUS ■□×× ALARM □□□	Waiting for other CPU's answer (ID setting)
STATUS □□×× ALARM □□□	Graphic CPU initialized, running
STATUS □■×× ALARM ■□□	ROM parity error occured Replace the ROM module
STATUS ■□×× ALARM ■□□	RAM parity error occured Replace the OPTION 1 board
STATUS □☆×× ALARM ■□□	Command error occured Replace the OPTION 1 board
STATUS ☆☆×× ALARM ■□□	NMI from other PCB (LED are blinking at same time) Check the LED status on other PCB
STATUS ☆□×× ALARM ■□□	BUS error occured Replace the OPTION 1 board
STATUS ☆★×× ALARM ■□□	Divide error occured (LED are blinking alternatingly) Replace the OPTION 1 board
STATUS ■☆×× ALARM ■□□	Invalid interrupt occured Replace the OPTION 1 board

· Communication function

□:OFF, ■:ON, ×:Don't care ☆:Blink

STATUS ■■■■ ALARM ■□□	Initial status after power on (CPU is not run yet)
STATUS ××□■ ALARM □□□	Remote buffer CPU initialized, running
STATUS ××☆☆ ALARM □□□	Communication error occured from OPTION 1 board

● Location of modules

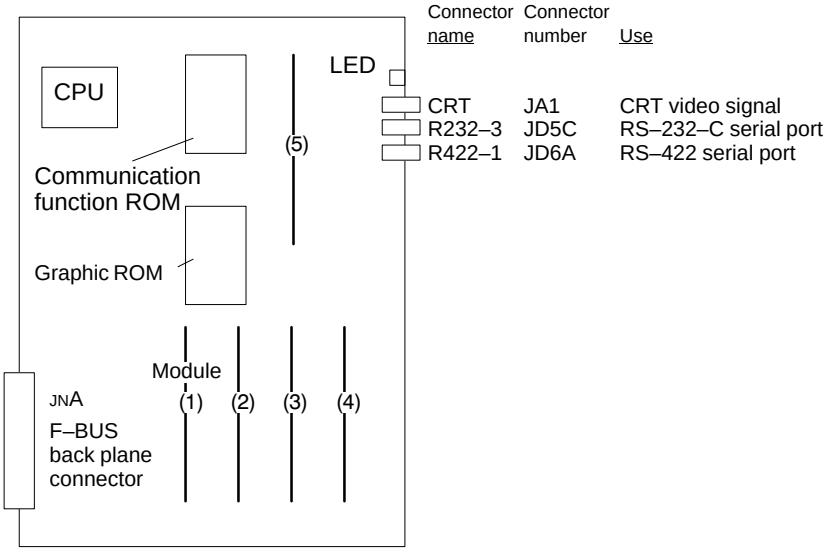

Connector name	Connector number	Use
CRT	JA1	CRT video signal
R232–3	JD5C	RS–232–C serial port
R422–1	JD6A	RS–422 serial port

● Type of modules

No.	Name	Specifications	Function	Display of system configuration screen
(1)	Graphic CPU module	A20B–2900–0350	CPU for CAP II	Not display
(2)	Graphic engine module	A20B–2900–0311	Graphic control for TT	GRAPHIC ENGINE MODULE 2
(3)	Graphic engine module	A20B–2900–0311	Graphic control	GRAPHIC ENGINE MODULE 1
(4)	CRTC module	A20B–2902–0270	CRT text display control	CRTC MODULE: 14”CRT
		A20B–2902–0272		CRTC MODULE:VGA
		A20B–2902–0273		CRTC MODULE: 14”CRT
		A20B–2902–0275		CRTC MODULE:VGA
(5)	Communication control module	A20B–2901–0361	Communication control	COMMUNICATION MODULE

2.5.4 Option 2 board

Series 16
Option 2 board for MAIN–A

Name	Specifications	Function
Option 2 board	A16B–2202–0400	CPU for 2 path control + Additional axis
Option 2 board	A16B–2202–0401	Additional axis
Option 2 board	A16B–2202–0890	CPU for 2 path control + Additional axis
Option 2 board	A16B–2202–0891	Additional axis

Series 16
Option 2 board for MAIN–B

Name	Specifications	Function
Option 2 board	A16B–2202–0850	CPU for 2 path control + Additional axis
Option 2 board	A16B–2202–0851	Additional axis

Series 18
Option 2 board for MAIN–B

Name	Specifications	Function
Option 2 board	A16B–2202–0853	CPU for 2 path control + Additional axis

● LED display

· LED display transition when the power is turned on□:OFF, ■:ON
The STATUS LEDs are green and the ALARM LEDs are red.

No.	LED display	NC statue
1	STATUS □□□□	When power is off
2	STATUS ■■■■	Startup status immediately after power is turned or CPU is not running
3	STATUS □■■■	Initializing RAM
4	STATUS ■□■■	Software ID has been set, initialization of keys, ALL CLR
5	STATUS □□■■	Waiting for software initialization 1
6	STATUS ■■□■	Waiting for software initialization 2, Initializing CMOS
7	STATUS □■□■	Initializing position coder
8	STATUS □■■□	Waiting for digital servo system startup
9	STATUS ■□□□	Startup has been completed and the system is now in normal operation mode.

· LED display when an erro occurs □:OFF, ■:ON

No.	LED display	NC statue
1	STATUS □■□□ ALARM ■□□	RAM parity error occurred.
2	STATUS □■□□ ALARM □□■	Servo alarm (watch dog, etc.) occurred
3	STATUS □■□□ ALARM □□□	Other alarm occurred

· LED display when system is not started □:OFF, ■:ON

No.	LED display	NC statue
1	STATUS ■■■■ ALARM ■□□	An SRAM parity error occurred.
2	STATUS ■■□□ ALARM ■□□	A DRAM parity alarm occurred. Replace the DRAM module.
3	STATUS ■■□□ ALARM □□□	A RAM module of at least 2M is not mounted, or another alarm occurred. Check and replace the DRAM module.

· LED display of additional axis □:OFF, ■:ON

No.	LED display	NC statue
1	STATUS ■■■■ ALARM □□□	On normal operation
2	STATUS ■■■■ ALARM □□■	Servo alarm occurred in additional axis.

- **Location of modules A16B–2202–0400 and A16B–2202–0401**

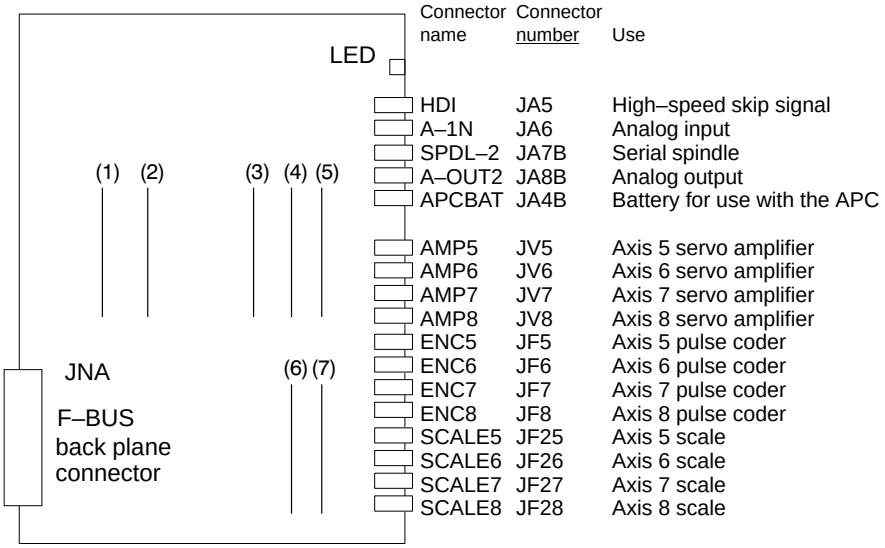

Connector name	Connector number	Use
HDI	JA5	High–speed skip signal
A–1N	JA6	Analog input
SPDL–2	JA7B	Serial spindle
A–OUT2	JA8B	Analog output
APCBAT	JA4B	Battery for use with the APC
AMP5	JV5	Axis 5 servo amplifier
AMP6	JV6	Axis 6 servo amplifier
AMP7	JV7	Axis 7 servo amplifier
AMP8	JV8	Axis 8 servo amplifier
ENC5	JF5	Axis 5 pulse coder
ENC6	JF6	Axis 6 pulse coder
ENC7	JF7	Axis 7 pulse coder
ENC8	JF8	Axis 8 pulse coder
SCALE5	JF25	Axis 5 scale
SCALE6	JF26	Axis 6 scale
SCALE7	JF27	Axis 7 scale
SCALE8	JF28	Axis 8 scale

No.	Name	Specifications	Function	Display of system configuration screen
(1)	FROM module	A20B–2902–0081	2nd path macro	FLASH ROM MODULE:4MB
		A20B–2902–0082		FLASH ROM MODULE:2MB
(2)	SRAM module	A20B–2900–0541	CNC system RAM	ADDITIONAL SRAM: 512KB
		A20B–2901–0991		ADDITIONAL SRAM: 2MB
(3)	DRAM module	A20B–2901–0940	CNC system RAM	DRAM:6MB
		A20B–2901–0941		DRAM:4MB
		A20B–2901–0942		DRAM:2MB
(4)	Spindle module	A20B–2901–0984	Spindle control	SERIAL SPINDLE LSI ANALOG SPINDLE LSI
		A20B–2901–0985		SERIAL SPINDLE LSI
		A20B–2901–0986		ANALOG SPINDLE LSI
(5)	HAM module	A20B–2900–0280	Analog I/O+HDI	H–SKIP DI & ANALOG I/O: HDI+ANALOG
		A20B–2900–0281	HDI	H–SKIP DI & ANALOG I/O: HDI
(6)	Servo module	A20B–2902–0060	Servo control 7th or 8th axis	SERVO 7/8 AXIS
		A20B–2902–0061		
(7)	Servo module	A20B–2902–0060	Servo control 5th or 6th axis	SERVO 5/6 AXIS
		A20B–2902–0061		

- **Location of modules**
  A16B–2202–0890, 0891

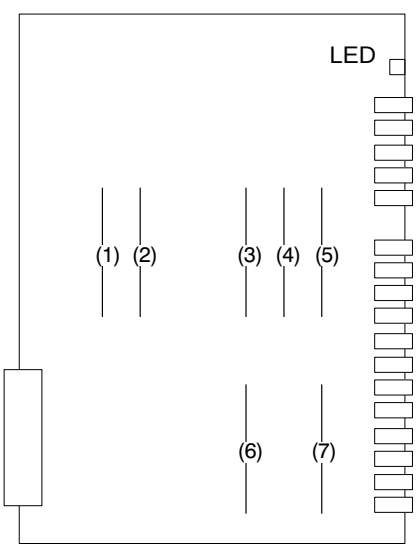

Connector name	Connector number	Use
HDI	JA5	High–speed skip signal
A–1N	JA6	Analog input
SPDL–2	JA7B	Serial spindle
A–OUT2	JA8B	Analog output
APCBAT	JA4B	Battery for use with the APC
AMP5	JV5	Axis 5 servo amplifier
AMP6	JV6	Axis 6 servo amplifier
AMP7	JV7	Axis 7 servo amplifier
AMP8	JV8	Axis 8 servo amplifier
ENC5	JF5	Axis 5 pulse coder
ENC6	JF6	Axis 6 pulse coder
ENC7	JF7	Axis 7 pulse coder
ENC8	JF8	Axis 8 pulse coder
SCALE5	JF25	Axis 5 scale
SCALE6	JF26	Axis 6 scale
SCALE7	JF27	Axis 7 scale
SCALE8	JF28	Axis 8 scale

No.	Name	Specifications	Function	Display of system configuration screen
(1)	FROM module	A20B–2902–0081	2nd path macro	FLASH ROM MODULE:4MB
		A20B–2902–0082		FLASH ROM MODULE:2MB
(2)	SRAM module	A20B–2902–0350	CNC expanded RAM	ADDITIONAL SRAM: 256KB
		A20B–2902–0351		ADDITIONAL SRAM: 768KB
		A20B–2902–0352		ADDITIONAL SRAM: 2.25MB
(3)	DRAM module	A20B–2901–0940	CNC system RAM	DRAM:6MB
		A20B–2901–0941		DRAM:4MB
		A20B–2901–0942		DRAM:2MB
(4)	Spindle module	A20B–2901–0984	Spindle control	SERIAL SPINDLE LSI ANALOG SPINDLE LSI
		A20B–2901–0985		SERIAL SPINDLE LSI
		A20B–2901–0986		ANALOG SPINDLE LSI
(5)	HAM module	A20B–2900–0280	Analog I/O+HDI	H–SKIP DI & ANALOG I/O: HDI+ANALOG
		A20B–2900–0281	HDI	H–SKIP DI & ANALOG I/O: HDI
(6)	Servo module	A20B–2902–0060	Servo control 7th or 8th axis	SERVO 7/8 AXIS
		A20B–2902–0061		
(7)	Servo module	A20B–2902–0060	Servo control 5th or 6th axis	SERVO 5/6 AXIS
		A20B–2902–0061		

- **Location of modules**
  A16B–2202–0850, 0851

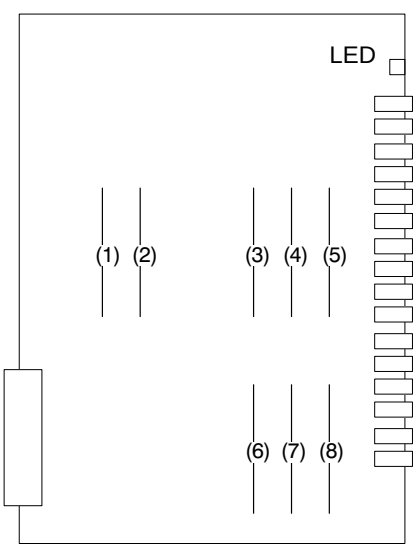

Connector name	Connector number	Use
HDI	JA5	High-speed skip signal
A-IN	JA6	Analog input
SPDL-2	JA7B	Serial spindle
A- OUT2	JA8B	Analog output
APCBAT	JA4B	Battery for use with the APC
AMP1	JS1A-2	Axis 1 servo amplifier
AMP2	JS2A-2	Axis 2 servo amplifier
AMP3	JS3A-2	Axis 3 servo amplifier
AMP4	JS4A-2	Axis 4 servo amplifier
AMP5	JS5A-2	Axis 5 servo amplifier
AMP6	JS6A-2	Axis 6 servo amplifier
SCALE1	JF21-2	Axis 1 scale
SCALE2	JF22-2	Axis 2 scale
SCALE3	JF23-2	Axis 3 scale
SCALE4	JF24-2	Axis 4 scale
SV- CHK	JA8C	Servo check

No.	Name	Specifications	Function	Display of system configuration screen
(1)	FROM module	A20B–2902–0081	2nd path macro	FLASH ROM MODULE:4MB
		A20B–2902–0082		FLASH ROM MODULE:2MB
(2)	SRAM module	A20B–2902–0350	CNC system RAM	ADDITIONAL SRAM: 256KB
		A20B–2902–0351		ADDITIONAL SRAM: 768KB
		A20B–2902–0352		ADDITIONAL SRAM: 2.25MB
(3)	DRAM module	A20B–2901–0940	CNC system RAM	DRAM:6MB
		A20B–2901–0941		DRAM:4MB
		A20B–2901–0942		DRAM:2MB
(4)	Spindle module	A20B–2901–0984	Spindle control	SERIAL SPINDLE LSI ANALOG SPINDLE LSI
		A20B–2901–0985		SERIAL SPINDLE LSI
		A20B–2901–0986		ANALOG SPINDLE LSI
(5)	HAM module	A20B–2900–0280	Analog I/O+HDI	H–SKIP DI & ANALOG I/O: HDI+ANALOG
		A20B–2900–0281	HDI	H–SKIP DI & ANALOG I/O: HDI
(8)	Servo module	A20B–2902–0060	Servo control 5th or 6th axis	SERVO 5/6 AXIS
		A20B–2902–0061		
(7)	Servo module	A20B–2902–0060	Servo control 3rd or 4th axis	SERVO 3/4 AXIS
		A20B–2902–0061		
(8)	Servo module	A20B–2902–0060	Servo control 1st or 2nd axis	SERVO 1/2 AXIS
		A20B–2902–0061		

- **Location of modules**
  A61B–2202–0853

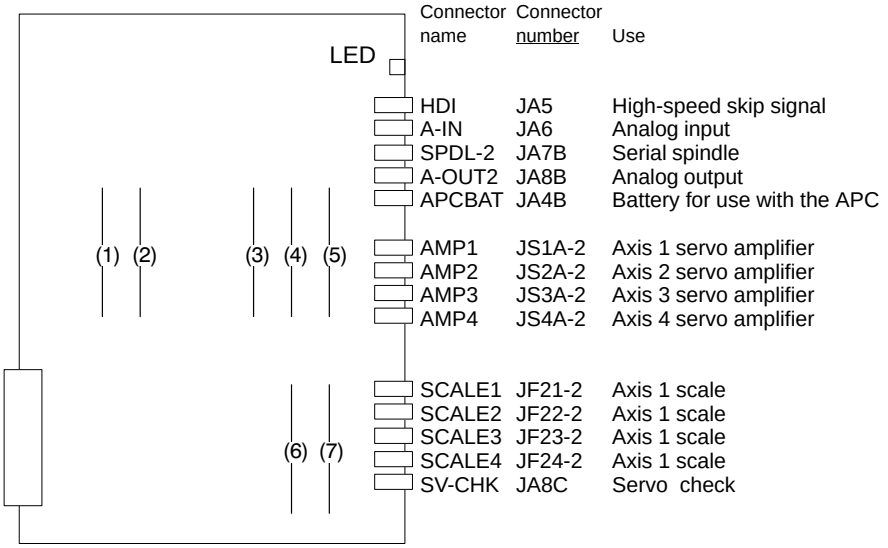

No.	Name	Specifications	Function	Display of system configuration screen
(1)	FROM module	A20B–2902–0081	2nd path macro	FLASH ROM MODULE:4MB
		A20B–2902–0082		FLASH ROM MODULE:2MB
(2)	SRAM module	A20B–2902–0350	CNC system RAM	ADDITIONAL SRAM: 256KB
		A20B–2902–0351		ADDITIONAL SRAM: 768KB
		A20B–2902–0352		ADDITIONAL SRAM: 2.25MB
(3)	DRAM module	A20B–2901–0940	CNC system RAM	DRAM:6MB
		A20B–2901–0941		DRAM:4MB
		A20B–2901–0942		DRAM:2MB
(4)	Spindle module	A20B–2901–0984	Spindle control	SERIAL SPINDLE LSI ANALOG SPINDLE LSI
		A20B–2901–0985		SERIAL SPINDLE LSI
		A20B–2901–0986		ANALOG SPINDLE LSI
(5)	HAM module	A20B–2900–0280	Analog I/O+HDI	H–SKIP DI & ANALOG I/O: HDI+ANALOG
		A20B–2900–0281	HDI	H–SKIP DI & ANALOG I/O: HDI
(6)	Servo module	A20B–2902–0060	Servo control 3rd or 4th axis	SERVO 3/4 AXIS
		A20B–2902–0061		
(7)	Servo module	A20B–2902–0060	Servo control 1st or 2nd axis	SERVO 1/2 AXIS
		A20B–2902–0061		

2.5.5
Option 3 board

Name	Specifications	Function
Option 3 board	A16B–3200–0054	PMC–RC
	A16B–3200–0055	PMC–RC+CAP
	A16B–3200–0057	CAP

- **LED display**

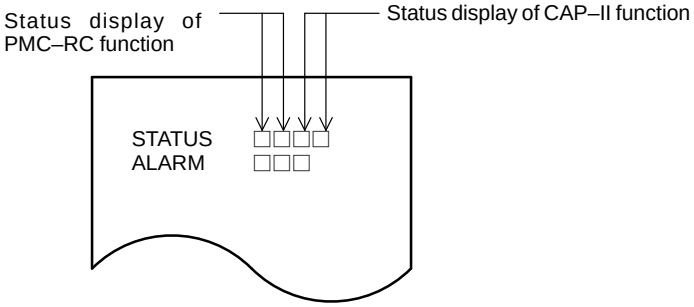

· LED display of PMC–RC function

(i) LED display transition when the power is turned on

□: OFF, ■:ON, ◆:Don't care, ☆: Blink

No.	LED display	NC statue
1	STATUS ■■◆◆	Startup status immediately after power is turned on
2	STATUS □■◆◆	Waiting for each processor in the system to set its ID
3	STATUS ■□◆◆	Waiting for each processor in the system to complete startup
4	STATUS □□◆◆	The PMC–RC function startup has been completed and the system is now in normal operation.

(ii) LED display when an error occurs

□: OFF, ■: ON, ◆: Don't care, ☆:Blink

No.	LED display	NC statue
1	STATUS ☆☆◆◆ ALARM □□□	NMI from another board (LEDs are flashing simultaneously). Check other boards' LED display
2	STATUS □☆◆◆ ALARM ■□□	The parity error of the memory for LADDER or work occurred. Initialize the memory for LADDER or replace it for work RAM MODULE
3	STATUS ☆□◆◆ ALARM □□□	A bus error occurred (incorrect memory access). Replace the option 3 board.
4	STATUS ■☆◆◆ ALARM □□□	Communication error occurred in I/O Link. Check the Link device and the cables.
5	STATUS ■◆◆ ALARM ■□□	The parity error etc. occurred in the PMC control module. Replace the PMC control module.
6	STATUS L☆◆◆ ALARM □□□	A checksum error occurred in the system program memory. The DRAM module for the PMC may have failed.

· LED display of CAP–II function

□: OFF, ■: ON, L☆: Blink, ◆: Don't care

No.	LED display	NC statue
1	STATUS ■■■■ ALARM □□□	Startup status immediately after power is turned on
2	STATUS ◆◆□■ ALARM □□□	Waiting for each procesor in the system to set its ID
3	STATUS ◆◆■□ ALARM □□□	Waiting for each processor in the system to complete startup
4	STATUS ◆◆□□ ALARM □□□	The CAP II function startup has been completed and the system is now in normal operation

· LED display when an error occurs

□: OFF, ■: ON, L☆: Blink, ◆: Don't care

No.	LED display	NC statue
1	STATUS ◆◆★★ ALARM □□□	NMI from another board (STATUS LEDs 3 and 4 are flashing simultaneously). Check other boards' LED display.
2	STATUS ◆◆□★ ALARM □□□	A CAP II sub–memory parity error occurred. Initialize the sub–memory.
3	STATUS ◆◆★□ ALARM □□□	A bus error occurred (incorrect memory access). Replace the option 3 board.
4	STATUS ◆◆★☆ ALARM □□□	A ROM parity error occurred (STATUS LEDs 3 and 4 are flashing alternately). Replace the CAP II ROM module.

· Alarm LED display □:OFF, ■:ON

LED display	Description	Cause and required action
ALARM □□■	An I/O link error occurred.	Check the link devices and cables.
ALARM □■□	A parity error occurred in the SRAM for CAP–II	The SRAM module for CAP–II may be out of order
ALARM □■■	A parity error occurred in the DRAM for PMC	The DRAM module for PMC may have failed.
ALARM ■□□	A parity error occurred in the DRAM for CAP–II	The DRAM module for CAP–II may have failed
ALARM ■□■	A parity error occurred in the DRAM for PMC	The DRAM module for PMC may have failed
ALARM ■■□	The CPU for PMC is not started	Check whether the main board has been activated normally
ALARM ■■■	The operation of the PMC module is abnormal	The PMC module may have failed

● Location of modules

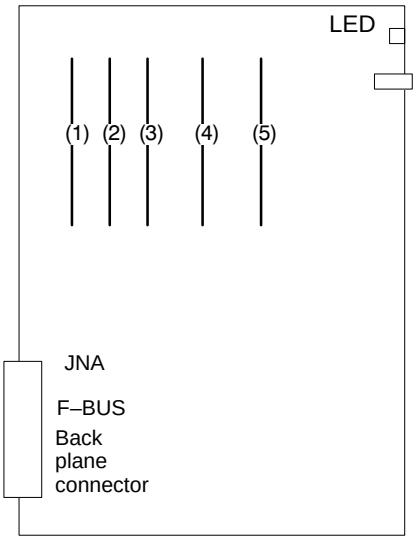

Connector name	Connector number	Use
IOLINK	JD1A2	FANUC I/O LINK

No.	Name	Specifications	Function	Display of system configuration screen
(1)	ROM module for CAP	A20B–2900–0290	CAP–II system	SYSTEM ROM MODULE :1MB
		A20B–2900–0291		SYSTEM ROM MODULE :768KB
(2)	ROM module for CAP	A20B–2901–0390	CPU for CAP–II	No. display
(3)	ROM module for CAP	A20B–2901–0413	DRAM+ SRAM for CAP–II	SRAM MODULE :512KB DRAM MODULE :512KB
(4)	DRAM module for PMC	A20B–2902–0191	DRAM for PMC	ADDITIONAL DRAM(MGR) DRAM(APPLICATION) :2MB
		A20B–2902–0192		ADDITIONAL DRAM(MGR) DRAM(APPLICATION) :1MB
		A20B–2902–0193		ADDITIONAL DRAM(MGR) DRAM(APPLICATION) :512KB
		A20B–2902–0194		ADDITIONAL DRAM(MGR)
		A20B–2902–0196		DRAM(APPLICATION) :2MB
		A20B–2902–0197		DRAM(APPLICATION) :1MB
		A20B–2902–0198		DRAM(APPLICATION) :512KB
(5)	PMC module module	A20B–2901–0960		PMC MODULE:PMP2
		A20B–2901–0961		PMC MODULE:PMP2

2.5.6 Loader Control boad

Name	Code	Function
Loader control board	A16B–2202–0560	Loader control function for MAIN–A
Loader control board	A16B–2202–0880	Loader control function for MAIN–B

· LED display transition when the power is turned on

□: OFF, ■: ON

No.	LED display	Description
1	STATUS □□□□	The power is off
2	STATUS ■■■■	The power has just been turned on, or the CPU is not operating
3	STATUS □■■■	RAM is initialized
4	STATUS ■□■■	The software ID has been set. The keys are initialized. All data is cleared.
5	STATUS □□■■	Software initialization is being awaited (wait state 1)
6	STATUS ■■□■	Software initialization is being awaited (wait state 2)
7	STATUS □■□■	The position coder is initialized
8	STATUS □■■□	Digital servo initialization is being awaited
9	STATUS ■□□□	Initialization has been completed (steady state)

· LED display upon occurrence of an error

□:OFF, ■:ON

No.	LED display	Description
1	STATUS □■□□ ALARM ■□□	Parity alarm in loader control
2	STATUS □■□□ ALARM □□■	Servo alarm in loader control
3	STATUS □■□□ ALARM □□□	Alarm other than parity or servo alarm

- **Location of modules**

- **Incase of A16B–2202–0560**

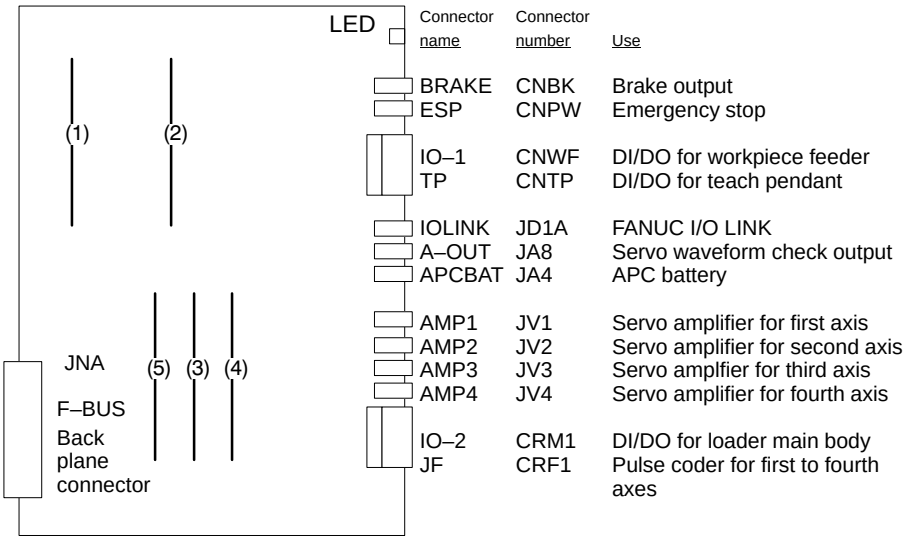

No.	Name	Specifications	Function	Display of system configuration screen
(1)	FROM module	A20B–2902–0082	ROM for macro on loader control side	FLASH ROM MODULE:2MB
(2)	DRAM module	A20B–2901–0941	Loader system RAM	DRAM:4MB
		A20B–2901–0942		DRAM:2MB
(3)	PMC module	A20B–2900–0142	PMC control	PMC MODULE: BSI+SLC
		A20B–2900–0143		PMC MODULE: BSI
(4)	Servo module	A20B–2902–0060	Servo control 3rd or 4th axis	SERVO 3/4 AXIS
		A20B–2902–0061		
(5)	Servo module	A20B–2902–0060	Servo control 1st or 2nd axis	SERVO 1/2 AXIS
		A20B–2902–0061		

- **Location of modules**
  A16B–2202–0880

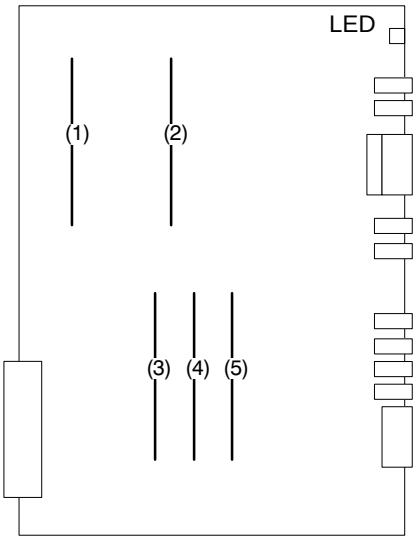

Connector name	Connector number	Use
BRAKE	CNBK	Brake output
ESP	CNPW	Emergency stop
IO–1	CNWF	DI/DO for workpiece feeder
TP	CNTP	DI/DO for teach pendant
IOLINK	JD1A	FANUC I/O LINK
A–OUT	JA8	Servo waveform check output
AMP1	JS1A	Servo amplifier for first axis
AMP2	JS2A	Servo amplifier for second axis
AMP3	JS3A	Servo amplifier for third axis
AMP4	JS4A	Servo amplifier for fourth axis
IO- 2	CRM1	DI/ DO for loader main body AMP1

No.	Name	Specifications	Function	Display of system configuration screen
(1)	FROM module	A20B–2902–0082	ROM for macro of loader side	FLASH ROM MODULE:2MB
(2)	DRAM module	A20B–2901–0941	Loader system RAM	DRAM:4MB
		A20B–2901–0942		DRAM:2MB
(3)	PMC module	A20B–2900–0142	PMC control	PMC MODULE: BSI+SLC
		A20B–2900–0143		PMC MODULE: BSI
(4)	Servo module	A20B–2902–0060	Servo control 3rd or 4th axis	SERVO 3/4 AXIS
		A20B–2902–0061		
(5)	Servo module	A20B–2902–0060	Servo control 1st or 2nd axis	SERVO 1/2 AXIS
		A20B–2902–0061		

2.5.7 I/O Card (Sink Type Output)

Name	Code	Function
I/O card (sink type output)	A16B–2200–0950	DI : 104 DO : 80 With high–speed skip
	A16B–2200–0951	DI : 104 DO : 72 With high–speed skip
	A16B–2200–0952	DI : 80 DO : 56 With high–speed skip
	A16B–2200–0953	DI : 40 DO : 40 With high–speed skip
	A16B–2200–0954	High–speed skip only
	A16B–2200–0955	DI : 104 DO : 80 Without high–speed skip
	A16B–2200–0956	DI : 104 DO : 72 Without high–speed skip
	A16B–2200–0957	DI : 80 DO : 56 Without high–speed skip
	A16B–2200–0958	DI : 40 DO : 40 Without high–speed skip
I/O card add–on board	A20B–9001–0480	Use with A16B–2200–0950 or A16B–2200–0955 listed above

Note
This printed circuit board has no LED display.

2.5.8 I/O Card (Source Type Output)

Name	Code	Function
I/O card (Source type output)	A16B–2200–0981	DI : 104 DO : 72 With high–speed skip
	A16B–2200–0982	DI : 80 DO : 56 With high–speed skip
	A16B–2200–0983	DI : 40 DO : 40 With high–speed skip
	A16B–2200–0986	DI : 104 DO : 72 Without high–speed skip
	A16B–2200–0987	DI : 80 DO : 56 Without high–speed skip
	A16B–2200–0988	DI : 40 DO : 40 Without high–speed skip
	A16B–2202–0720	DI : 104 DO : 80 With high–speed skip
	A16B–2202–0721	DI : 104 DO : 72 With high–speed skip
	A16B–2202–0722	DI : 80 DO : 56 With high–speed skip
	A16B–2202–0723	DI : 40 DO : 40 With high–speed skip
	A16B–2202–0725	DI : 104 DO : 80 Without high–speed skip
	A16B–2202–0726	DI : 104 DO : 72 Without high–speed skip
	A16B–2202–0727	DI : 80 DO : 56 Without high–speed skip
	A16B–2202–0728	DI : 40 DO : 40 Without high–speed skip
I/O card add on board	A20B–8001–0150	DI : 52 DO : 40 To be used together with the above card (0720) or (0725)

Note
This printed circuit board has no LED display.

2.5.9 I/O Cards with Power Supply (Power C) (Sink Type Output)

Name	Code	Function
I/O card (sink type output)	A16B–2202–0690	DI : 104 DO : 72
	A16B–2202–0691	DI : 80 DO : 56
	A16B–2202–0692	DI : 40 DO : 40
Power supply	A20B–1005–0420	To be used with the above I/O card

- **LED display**

PIL (Green)	Lights when DC input power voltage is applied to CP1A

- **Positions of connector etc.**

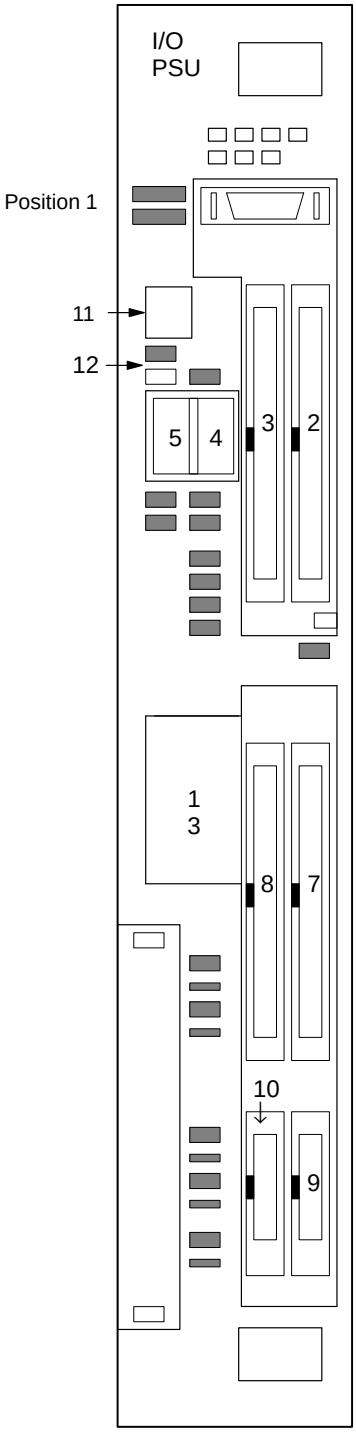

	Function	Abbreriation	Connector number
1	High–speed skip signal	HDI	JA5B
2	DIGITAL OUTPUT 1	DO–1	C54
3	DIGITAL OUTPUT 2	DO–1	C55
4	24V Output	DC OUT	CP1B
5	24V Input	DC IN	CP1A
6	Battery		CP8
11	Fuse		
12	LED	PIL	
7	DIGITAL INPUT 1	DI–1	C50
8	DIGITAL INPUT 2	DI–2	C51
9	DIGITAL INPUT 3	DI–3	C52
10	DIGITAL INPUT 4	DI–4	C53
13	Battery case		

2.5.10 I/O Cards with Power Supply (Power C) (Source Type Output)

Name	Code	Function
I/O card (sink type output)	A16B–2202–0690	DI : 104 DO : 72
	A16B–2202–0691	DI : 80 DO : 56
	A16B–2202–0692	DI : 40 DO : 40
Power supply	A20B–1005–0420	To be used with the above I/O card

- **LED display**

PIL (Green)	Lights when DC input power voltage is applied to CP1A

- **Positions of connector etc.**

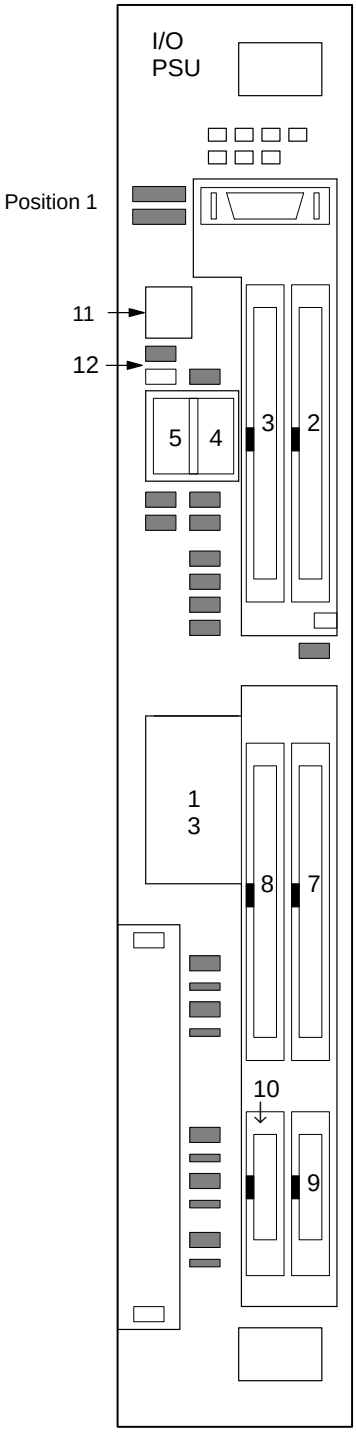

	Function	Abbreriation	Connector number
1	High–speed skip signal	HDI	JA5B
2	DIGITAL OUTPUT 1	DO–1	C74
3	DIGITAL OUTPUT 2	DO–1	C75
4	24V Output	DC OUT	CP1B
5	24V Input	DC IN	CP1A
6	Battery		CP8
11	Fuse		
12	LED	PIL	
7	DIGITAL INPUT 1	DI–1	C70
8	DIGITAL INPUT 2	DI–2	C71
9	DIGITAL INPUT 3	DI–3	C72
10	DIGITAL INPUT 4	DI–4	C73
13	Battery case		

2.5.11 Background Graphic Board

Name	Code	Function
Background graphic board	A16B–2202–0852	Background graphic function

● LED display

· LED display transition when the power is turned on
The STATUS LEDs are green and the ALARM LEDs are red.

□:OFF, ■:ON

No.	LED display	NC statue
1	STATUS □□□□	When power is off
2	STATUS ■■■■	Start up status immediately after power is turned or CPU is not running
3	STATUS □■■■	Initializing RAM
4	STATUS ■□■■	Software ID has been set, initialization of keys, ALL CLR
5	STATUS □□■■	Waiting for software initialization 1
6	STATUS ■■□■	Waiting for software initialization 2, Initializing CMOS
7	STATUS ■□□□	Initialization has been completed (steady state).

· LED display when an erro occurs □:OFF, ■:ON

No.	LED display	NC statue
1	STATUS □■□□ ALARM ■□□	RAM parity error occurred.

· LED display when system is not started □:OFF, ■:ON

No.	LED display	NC statue
1	STATUS ■■■■ ALARM ■□□	SRAM parity error occurred.
2	STATUS ■■□□ ALARM ■□□	DRAM parity error occurred.

- **Location of modules**

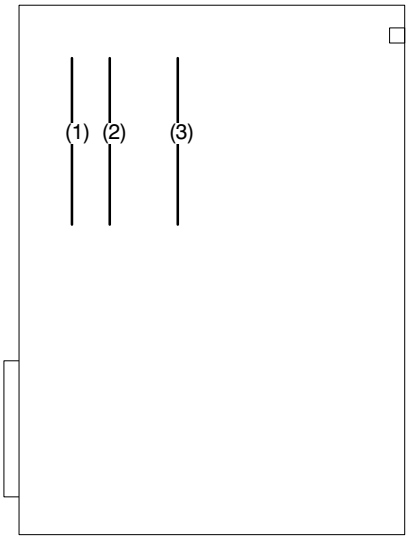

No.	Name	Specifications	Function	Display of system configuration screen
(1)	FROM module	A20B–2902–0081	Background graphic system	FLASH ROM MODULE:4MB
		A20B–2902–0082		FLASH ROM MODULE:2MB
(2)	SRAM module	A20B–2902–0350	system RAM	ADDITIONAL SRAM: 256KB
		A20B–2902–0351		ADDITIONAL SRAM: 768KB
		A20B–2902–0352		ADDITIONAL SRAM: 2.25MB
(3)	DRAM module	A20B–2901–0940	system RAM	DRAM:6MB
		A20B–2901–0941		DRAM:4MB
		A20B–2901–0942		DRAM:2MB

2.6 LIST OF THE PCBS AND UNITS

2.6.1 Control Unit Rack

Name		Drawing No.	Remarks
Series16 Control unit rack (Without MMC–IV)	2 Slots	A02B–0200–C001	
		A02B–0200–C021	For power supply C
	3 Slots	A02B–0200–C005	
	4 Slots	A02B–0200–C002	
	6 Slots	A02B–0200–C003	
	8 Slots	A02B–0200–C004	
Series16 Control unit rack (With MMC–IV)	4 Slots	A02B–0200–C010	
	6 Slots	A02B–0200–C011	
	8 Slots	A02B–0200–C012	
Series18 Control unit rack (Without MMC–IV)	2 Slots	A02B–0129–C001	
		A02B–0129–C021	For power supply C
	3 Slots	A02B–0129–C005	
	4 Slots	A02B–0129–C002	
	6 Slots	A02B–0129–C003	
Series18 Control unit rack (With MMC–IV)	4 Slots	A02B–0129–C010	
	6 Slots	A02B–0129–C011	

2.6.2 Power Unit

Name		Drawing No.	Remarks
Power unit	AI	A16B–1212–0900	
		A16B–1212–0901	
	BI	A16B–1212–0870	
		A16B–1212–0871	
	C	A20B–1005–0420	DC24V input

2.6.3 Control Unit P.C.B.

Name		Drawing No.	Remarks
Main CPU board	Series 16(MAIN–A, 4–axis specification)	A16B–3200–0010	
		A16B–3200–0170	
	Series 16(MAIN–B, 6–axis specification)	A16B–3200–0110	
	Series 18(MAIN–B, 4–axis specification)	A16B–3200–0860	
	Series 18(MAIN–B, 6–axis specification)	A16B–3200–0160	
Option 1 board	Graphic+remote buffer	A16B–2200–0918	Servo waveform cannot be displayed.
	Graphic+DNC1	A16B–2200–0916	
	Remote buffer	A16B–2200–0913	
	DNC1	A16B–2200–0914	
	Graphic	A16B–2200–0919	
Option 2 board	Series 16(MAIN–A, specification, with sub–CPU, 4 axes)	A16B–2202–0400	
		A16B–2202–0890	
	Series 16(MAIN–A, specification, without sub–CPU, 4 axes)	A16B–2202–0401	
		A16B–2202–0891	
	Series 16(MAIN–B, specification, with sub–CPU, 6 axes)	A16B–2202–0850	
	Series 16(MAIN–B, specification, without sub–CPU)	A16B–2202–0851	
	Series 18(MAIN–B, specification, with sub–CPU)	A16B–2202–0853	
Option 3 board	PMC–RC+CAP–II	A16B–3200–0055	
	PMC–RC	A16B–3200–0054	
	CAP–II	A16B–3200–0057	
Loader control board	MAIN–A specification	A16B–2202–0560	
	MAIN–B specification	A16B–2202–0880	
Background drawing board		A16B–2202–0852	

Name		Drawing No.	Remarks
I/O card (sink output type)	A (DI:40 DO:40)	A16B–2200–0958	
	B (DI:80 DO:56)	A16B–2200–0957	
	C (DI:104 DO:72)	A16B–2200–0956	
	D (DI:104 DO:80)	A16B–2200–0955	
	E (DI:40 DO:40)	A16B–2200–0953	With high–speed skip signal input
	F (DI:80 DO:56)	A16B–2200–0952	
	G (DI:104 DO:72)	A16B–2200–0951	
	H (DI:104 DO:80)	A16B–2200–0950	
	Expansioon board	A20B–9001–0480	Used together with D or H
	High–speed skip signal input only	A16B–2200–0954	
	A (DI:40 DO:40)	A16B–2202–0692	Used as power C
	B (DI:80 DO:56)	A16B–2202–0691	
	C (DI:104 DO:72)	A16B–2202–0690	
I/O card (source output type)	A (DI:40 DO:40)	A16B–2200–0988	
		A16B–2202–0728	
	B (DI:80 DO:56)	A16B–2200–0987	
		A16B–2202–0727	
	C (DI:104 DO:72)	A16B–2200–0986	
		A16B–2202–0726	
	D (DI:104 DO:80)	A16B–2202–0725	
	E (DI:40 DO:40)	A16B–2200–0983	With high–speed skip signal input
		A16B–2202–0723	
	F (DI:80 DO:56)	A16B–2200–0982	
		A16B–2202–0722	
	G (DI:104 DO:72)	A16B–2200–0981	
		A16B–2202–0721	
	H (DI:104 DO:80)	A16B–2202–0720	
	Expansion board	A20B–8001–0150	Used together with D (0725) or H (0720)
	A (DI:40 DO:40)	A16B–2202–0852	Used as power C
	B (DI:80 DO:56)	A16B–2202–0851	
	C (DI:104 DO:72)	A16B–2202–0850	

Add on board

Name	Drawing No.	Remarks
Graphic function board	A20B–8200–0010	For main CPU board
	A20B–8200–0011	

2.6.4 Modules

Name		Drawing No.	Remarks
PMC control module	For PMC–RE	A20B–2900–0140	
	For loader control (with I/O link interface)	A20B–2900–0142	
	For loader control (without I/O link interface) For PMC–RC3	A20B–2900–0143	
	PMC–RB3/RC3 (with I/O link interface)	A20B–2901–0960	
	PMC–RB3/RC3 (without I/O link interface)	A20B–2901–0961	
High–speed DI, analog I/O module	Analog I/O+high–speed skip DI	A20B–2900–0280	
	High–speed skip DI	A20B–2900–0281	
ROM module	1 MB	A20B–2900–0290	
	768 KB	A20B–2900–0291	
Graphic control module		A20B–2900–0311	
Graphic CPU module (for CAP–II)		A20B–2900–0350	
SRAM module (512 KB)		A20B–2900–0541	
14–bit A/D converter module		A20B–2900–0580	
SRAM module (2 MB)		A20B–2900–0991	
CPU module (for CAP–II)		A20B–2901–0390	
DRAM SRAM module		A20B–2901–0413	
DRAM module	6MB	A20B–2901–0940	
	4MB	A20B–2901–0941	
	2MB	A20B–2901–0942	
Spindle control module	Serial+analog	A20B–2901–0980	For main CPU board
	Serial	A20B–2901–0981	
	Analog	A20B–2901–0982	
	Serial+analog	A20B–2901–0984	For option 2 board
	Serial	A20B–2901–0985	
	Analog	A20B–2901–0986	

Name		Drawing No.	Remarks
Servo control module		A20B–2902–0060	
		A20B–2902–0061	For learning control function
FROM/SRAM module	FROM 4MB+SRAM 512KB	A20B–2902–0080	
	FROM 4MB	A20B–2902–0081	
	FROM 2MB	A20B–2902–0082	
FROM/SRAM module	FROM 8MB+SRAM 2MB	A20B–2902–0090	
	FROM 8MB	A20B–2902–0091	
	FROM 6MB	A20B–2902–0092	
	FROM 8MB+SRAM 512KB	A20B–2902–0093	
	FROM 6MB+SRAM 512KB	A20B–2902–0094	
DRAM module	512KB+2MB	A20B–2902–0191	With management software expansion RAM (512 KB) (For opton 3)
	512KB+1MB	A20B–2902–0192	
	512KB+512KB	A20B–2902–0193	
	512KB	A20B–2902–0194	
	2MB	A20B–2902–0196	For option 3
	1MB	A20B–2902–0197	
	512KB	A20B–2902–0198	
PMC control module (for PMC–RB4/RC4)		A20B–2902–0250	
CRT control module	For 14″CRT	A20B–2902–0270	When MMC is not provided
	For 9″CRT	A20B–2902–0271	
	For LCD	A20B–2902–0272	
	For 14″CRT (MMC–III)	A20B–2902–0273	When MMC is provided
	For LCD (MMC–III, MMC–IV)	A20B–2902–0275	
	For 9″CRT	A20B–2902–0276	When MMC is not provided
	For LCD	A20B–2902–0277	
	For 14″CRT	A20B–2902–0278	
FROM/SRAM module	FROM 4MB+SRAM 256KB	A20B–2902–0341	
	FROM 2MB+SRAM 256KB	A20B–2902–0343	
SRAM module	256KB	A20B–2902–0350	
	256KB+512KB	A20B–2902–0351	
	256KB+2MB	A20B–2902–0352	
FROM SRAM module	FROM 8MB+SRAM 256KB	A20B–2902–0410	
	FROM 6MB+SRAM 256KB	A20B–2902–0411	

2.6.5 CRT/MDI Unit

For system without MMC–IV

Name		Specification	Remarks
9″CRT/MDI (small size, monochrome)	TB	A02B–0120–C041#TA	
		A02B–0120–C041#TAR	Conforming to safety standards
		A02B–0120–C041#TAS	Conforming to safety standards Symbolic keys
	MB	A02B–0120–C041#MA	
		A02B–0120–C041#MAR	Conforming to safety standards
		A02B–0120–C041#MAS	Conforming to safety standards Symbolic keys
9″CRT/MDI (small size, color)	TB	A02B–0120–C042#TA	
	MB	A02B–0120–C042#MA	
9″CRT/MDI (standard, monochrome)	TB	A02B–0120–C051#TA	
		A02B–0120–C051#TAR	Conforming to safety standards
		A02B–0120–C051#TAS	Conforming to safety standards Symbolic keys
	MB	A02B–0120–C051#MA	
		A02B–0120–C051#MAR	Conforming to safety standards
		A02B–0120–C051#MAS	Conforming to safety standards Symbolic keys
9″CRT/MDI (standard, color)	TB	A02B–0120–C052#TA	
	MB	A02B–0120–C052#MA	
9″PDP/MDI (standard key)	TB	A02B–0120–C081#TA	
		A02B–0200–C101#TBR	Conforming to safety standards +24 V input
		A02B–0200–C101#TBS	Conforming to safety standards +24 V input Symbolic keys
	MB	A02B–0120–C081#MA	
		A02B–0200–C101#MBR	Conforming to safety standards +24 V input
		A02B–0200–C101#MBS	Conforming to safety standards +24 V input Symbolic keys
9″ separate–type CRT unit	Mono-chrome	A02B–0120–C111	
	Color	A02B–0120–C112	

Name		Specification	Remarks
9″ separate–type PDP unit	Mono-chrome	A02B–1020–C113	
		A02B–0200–C100	Conforming to safety standards +24 V input
Separate–type MDI unit (small size)	TB	A02B–0120–C121#TA	
		A02B–0120–C121#TAR	Conforming to safety standards
		A02B–0120–C121#TAS	Conforming to safety standards Symbolic keys
	MB	A02B–0120–C121#MA	
		A02B–0120–C121#MAR	Conforming to safety standards
		A02B–0120–C121#MAS	Conforming to safety standards Symbolic keys
Separate–type MDI unit (standard)	TB	A02B–0120–C122#TA	
		A02B–0120–C122#TAR	Conforming to safety standards
		A02B–0120–C122#TAS	Conforming to safety standards Symbolic keys
	MB	A02B–0120–C122#MA	
		A02B–0120–C122#MAR	Conforming to safety standards
		A02B–0120–C122#MAS	Conforming to safety standards Symbolic keys
14″ CRT/MDI (color, landscape type)	TB	A02B–0120–C071#TA	
		A02B–0120–C071#TF	For CAP–II
	MB	A02B–0120–C071#MA	
14″ CRT/MDI (color, portrait type)	TB	A02B–0120–C072#TA	
		A02B–0120–C072#TF	For CAP–II
	MB	A02B–0120–C072#MA	

Name		Specification	Remarks
9.5″ LCD/MDI (color, landscape type)	TB	A02B–0200–C061#TB	
		A02B–0200–C061#TBR	Conforming to safety standards
		A02B–0200–C061#TBS	Conforming to safety standards Symbolic keys
		A02B–0200–C061#TFB	For CAP–II
		A02B–0200–C061#TFBR	For CAP–II Conforming to safety standards
		A02B–0200–C061#TFBS	For CAP–II Conforming to safety standards Symbolic keys
	MB	A02B–0200–C061#MB	
		A02B–0200–C061#MBR	Conforming to safety standards
		A02B–0200–C061#MBS	Conforming to safety standards Symbolic keys
9.5″ LCD/MDI (color, portrait type)	TB	A02B–0200–C062#TB	
		A02B–0200–C062#TBR	Conforming to safety standards
		A02B–0200–C062#TBS	Conforming to safety standards Symbolic keys
		A02B–0200–C062#TFB	For CAP–II
		A02B–0200–C062#TFBR	For CAP–II Conforming to safety standards
		A02B–0200–C062#TFBS	For CAP–II Conforming to safety standards Symbolic keys
	MB	A02B–0200–C062#MB	
		A02B–0200–C062#MBR	Conforming to safety standards
		A02B–0200–C062#MBS	Conforming to safety standards Symbolic keys
8.4″ separate–type LCD unit	Color	A02B–0200–C050	
7.2″ separate–type LCD unit	Mono-chrom e	A02B–0200–C081	

For system with MMC–IV

Name		Specification	Remarks
14″ CRT/MDI (color, landcape type)	TB	A02B–0200–C071#TB	
		A02B–0200–C071#TBR	Conforming to safety standards
		A02B–0200–C071#TBS	Conforming to safety standards Symbolic keys
		A02B–0200–C071#TFB	For CAP–II
		A02B–0200–C071#TFBR	For CAP–II Conforming to safety standards
		A02B–0200–C071#TFBS	For CAP–II Conforming to safety standards Symbolic keys
	MB	A02B–0200–C071#MB	
		A02B–0200–C071#MBR	Conforming to safety standards
		A02B–0200–C071#MBS	Conforming to safety standards Symbolic keys
14″ CRT/MDI (color, portrait type)	TB	A02B–0200–C072#TB	
		A02B–0200–C072#TBR	Conforming to safety standards
		A02B–0200–C072#TBS	Conforming to safety standards Symbolic keys
		A02B–0200–C072#TFB	For CAP–II
		A02B–0200–C072#TFBR	For CAP–II Conforming to safety standards
		A02B–0200–C072#TFBS	For CAP–II Conforming to safety standards Symbolic keys
	MB	A02B–0200–C072#MB	
		A02B–0200–C072#MBR	Conforming to safety standards
		A02B–0200–C072#MBS	Conforming to safety standards Symbolic keys

Name		Specification	Remarks
9.5″ LCD/MDI (color, landcape type)	TB	A02B–0200–C065#TB	
		A02B–0200–C065#TBR	Conforming to safety standards
		A02B–0200–C065#TBS	Conforming to safety standards Symbolic keys
		A02B–0200–C065#TFB	For CAP–II
		A02B–0200–C065#TFBR	For CAP–II Conforming to safety standards
		A02B–0200–C065#TFBS	For CAP–II Conforming to safety standards Symbolic keys
	MB	A02B–0200–C065#MB	
		A02B–0200–C065#MBR	Conforming to safety standards
		A02B–0200–C065#MBS	Conforming to safety standards Symbolic keys
9.5″ LCD/MDI (color, portrait type)	TB	A02B–0200–C066#TB	
		A02B–0200–C066#TBR	Conforming to safety standards
		A02B–0200–C066#TBS	Conforming to safety standards Symbolic keys
		A02B–0200–C066#TFB	For CAP–II
		A02B–0200–C066#TFBR	For CAP–II Conforming to safety standards
		A02B–0200–C066#TFBS	For CAP–II Conforming to safety standards Symbolic keys
	MB	A02B–0200–C066#MB	
		A02B–0200–C066#MBR	Conforming to safety standards
		A02B–0200–C066#MBS	Conforming to safety standards Symbolic keys

Name		Specification	Remarks
8.4″ separate–type LCD unit	Color	A02B–0200–C051	
Separate–type MDI unit (small size)	TB	A02B–0120–C121#TA	
		A02B–0120–C121#TAR	Conforming to safety standards
	MB	A02B–0120–C121#MA	
		A02B–0120–C121#MAR	
Separate–type MDI unit (standard)	TB	A02B–0120–C122#TA	
		A02B–0120–C122#TAR	
	MB	A02B–0120–C122#MA	
		A02B–0120–C122#MAR	

2.7 HOW TO REPLACE THE MODULES

2.7.1 Removing

(1) Pull the latches of the module socket outwards. (Fig.(a))
(2) Pull out the module upward. (Fig.(b))

2.7.2 Insertion

(1) Insert the new module board diagonally with B–SIDE outward (Fig.b)
(2) While pushing on the upper edge of the module board, raise it until it is locked (Fig.(c)).

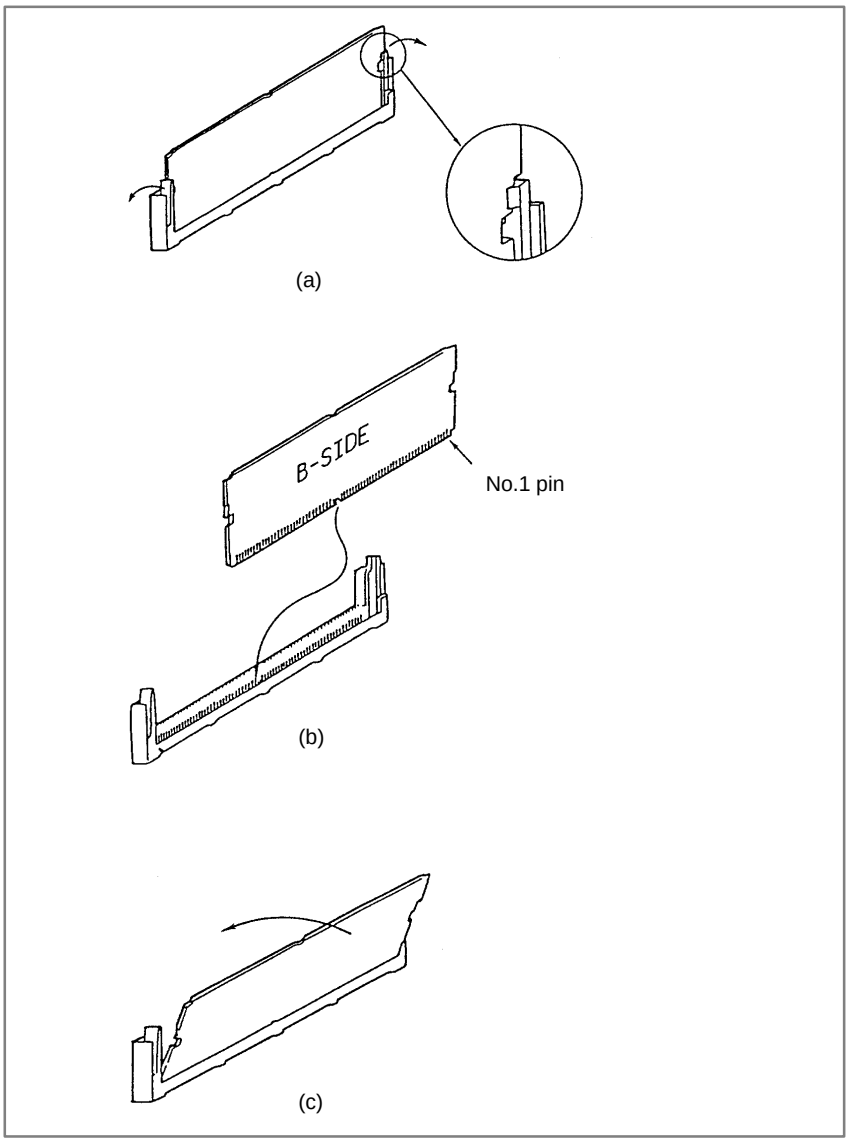

2.8 HOW TO REPLACE THE BATTERIES

2.8.1 Replace the Battery for Memory Back Up

1. Lithium battery (Order number is *A02B–0200–K102) is required.
2. The battery used for memory back up is located on the front of the main board.
3. Remove the battery cover on the main board by holding the upper and lower part of the battery cover and pulling it towards you. Then take off the battery.
4. Remove the connector on the main board towards you.
   If you replace the battery while the CNC power is off, you should replace it within 30 minutes. If it will take more than 30 minutes, you should replace the battery with power on. Or the CNC memory contents will be lost.
5. Connect the connector of new battery.
6. Mount a battery and put the battery cover back on.

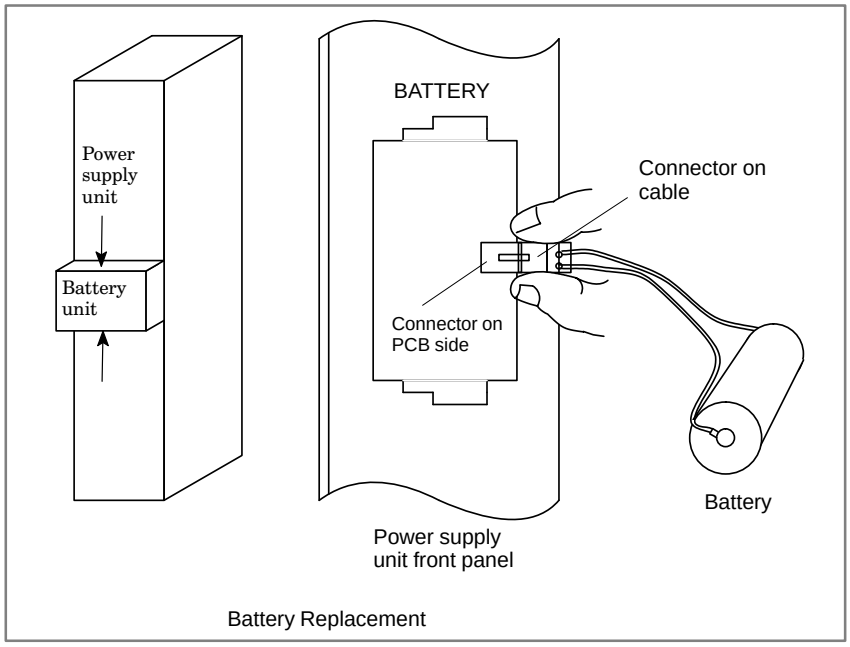

Battery Replacement

* FANUC's order number : A98L–0031–0012

2.8.2 Replacing Batteries for Separate Absolute Pulse Coder

1. Prepare 4 commercially available dry cell batteries
2. Turn on CNC power.
   If the batteries are replaced with the power off ,absolute position of the machine is lost.
3. Loosen the screws of battery case lid and remove the lid.
   Consult with the MTB's manual for where the battery case is installed.
4. Replace the batteries in the case.
   Take care to place the batteries facing in the correct direction. (Insert the batteries as shown in the diagram with 2 facing one way and 2 the other.)

- **Figure of replacing batteries**

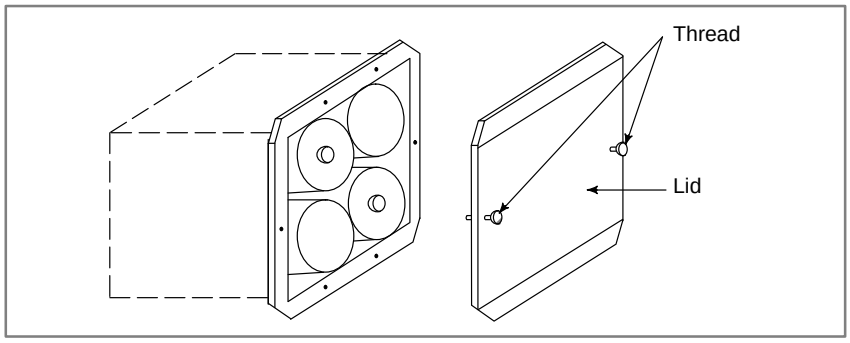

5. Having exchanged the batteries put the lid back on.
6. Turn off the power once, then turn it to on.
7. A battery alarm may be generated, but execute power off and on.
8. Procedure completes.

2.9 HOW TO REPLACE FAN MOTOR

Fan ordering information

	Ordering code	Number of units required
For 2–slot rack	A90L–0001–0378	For 1–slot rack
For 1–slot rack	A90L–0001–0385#A	For 2–slot rack

1. Remove the control section printed circuit board underneath the fan to be replaced.
2. There is a backplane inside the slot. The fan motor cable is connected to the backplane. Grasp the left and right side of the cable connector attached to the backplane and remove it.
3. Open the upper lid of the control section rack. Insert a philips head screwdriver into the hole at the center front of the lid. The latch holding the cover in place can be released by prying with the screwdriver in the direction shown in (3) of following figure.
4. Open the lid sufficiently and remove the fan motor. Since the fan itself is not screwed into the rack, it can be easily removed.
5. Install the new fan motor. Guide the fan motor cable through the hole and into the rack.
6. Close the lid until the latch locks.
7. Attach the fan motor cable to the connector on the back plane. At this time,affix the middle portion of the cable to the hooks at the back of the rack.
8. Insert the removed control section printed circuit board.

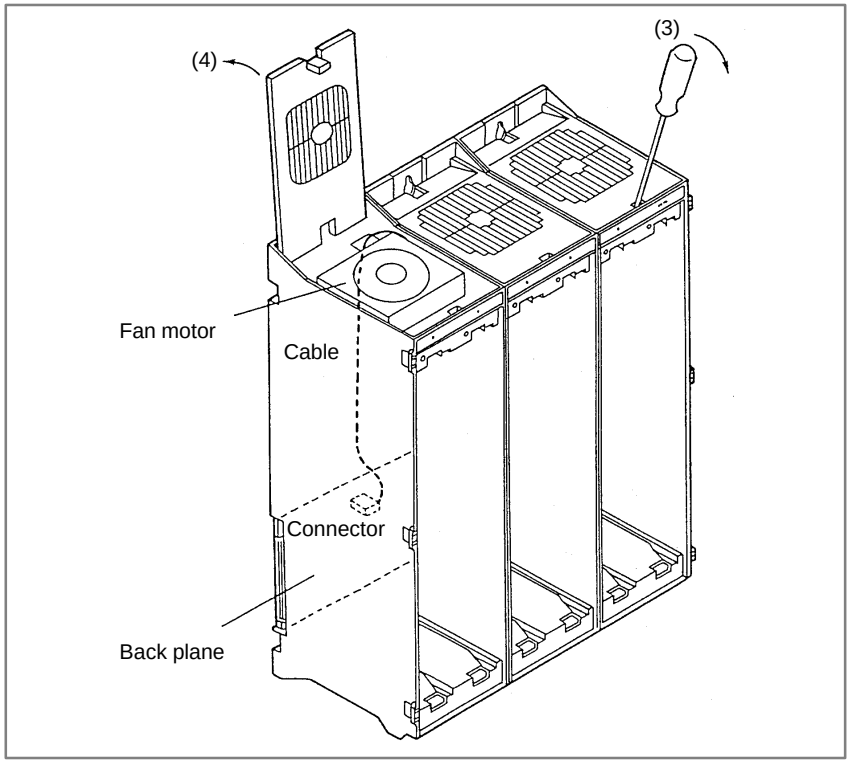

Fig. 2.9 Fan Motor Replacement

2.10 FUSE REPLACEMENT IN POWER SUPPLY UNIT

When a fuse blows in the power supply unit of the CNC, find and correct the cause of the failure and replace the fuse.
Each fuse has a small window in which a white mark appears when the fuse has blown.
Fig. 1 shows the fuse mounting diagram, and table 1 shows the fuse lists.

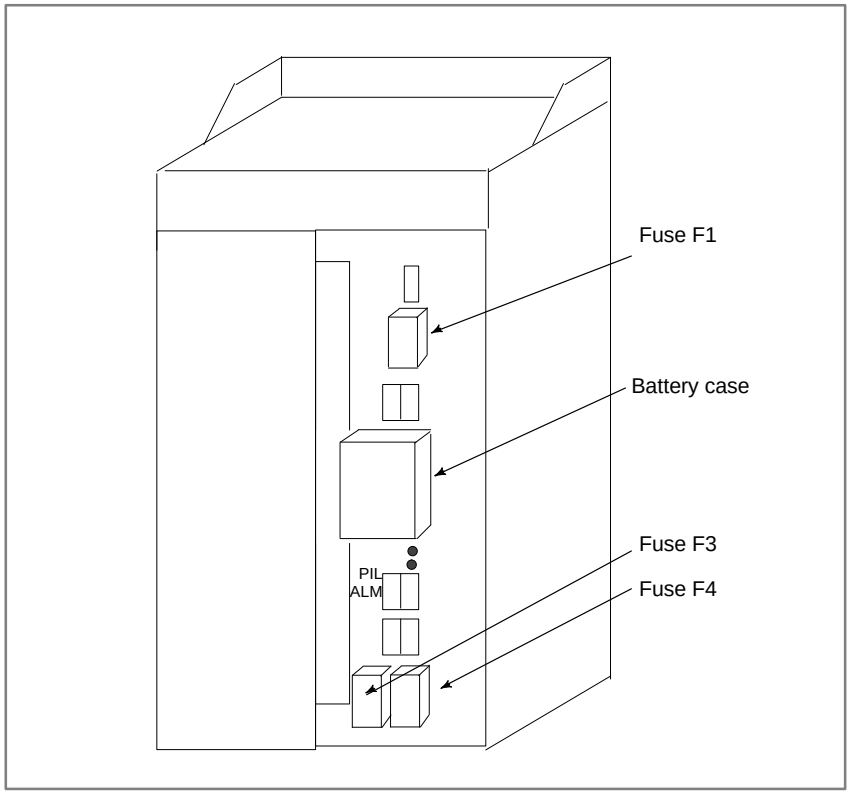

Fig.1 Mounting positions of fuses in the power supply unit

Table 1. Fuses

Power supply	Specifications	Symbol	Capacity	Parts specifications
AI	A02B–0200–K100	F1	7.5A	A60L–0001–0245#GP75
		F3	3.2A	A60L–0001–0075#3.2
		F4	5AS	A60L–0001–0046#5.0
BI	A02B–0200–K101	F1	7.5A	A60L–0001–0245#GP75
		F3	5A	A60L–0001–0075#5.0
		F4	5AS	A60L–0001–0046#5.0

Table 2. Uses of each fuse

Symbol	Uses
F1	For inputting 200VAC
F3	For power supply of 9″monochrome CRT or LCD
F4	For I/O unit, etc.

2.11 MAINTENANCE OF HEAT PIPE TYPE HEAT EXCHANGER

It is necessary to regulary clean the heat transformer, because the heat transformation ability will be reduced by the accumulation of dust. The frequency of the cleaning needed differs according to the installation environment and therefore should be determined by your own judgment accordint to the degree of dirt.

Air filter cleaning and replacement

Air filter cleaning and replacement method

1 When cleaning and replacing the filter, be sure to cut off the fan's electric power source.

2 Detach the filter cover and take out the filter inside.

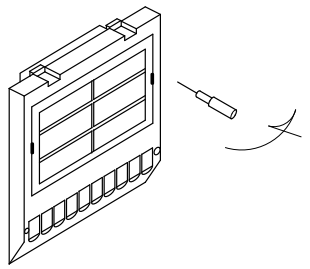

3 Protect the filter from silting due to dust by blowing air on both sides.

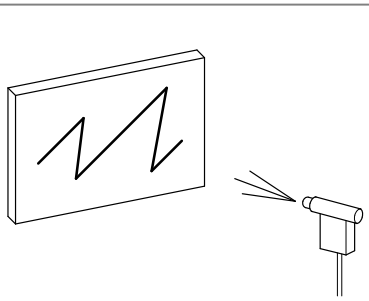

4 When dirt is conspicuous, press wash with a neutral detergent, rinse with fresh water, and the washing, allow to dry naturally. When replacing with the same product.

5 Insert the filter in the cover, align the flange in the groove, and install by pressing. Confirm that the cover will not come loose even if it is pulled.

Cleaning heat exchanger

Cleaning heat exchanger

1 When cleaning, be sure to cut off the fan power source.

2 Take out the external fan unit from the heat exchanger main unit.

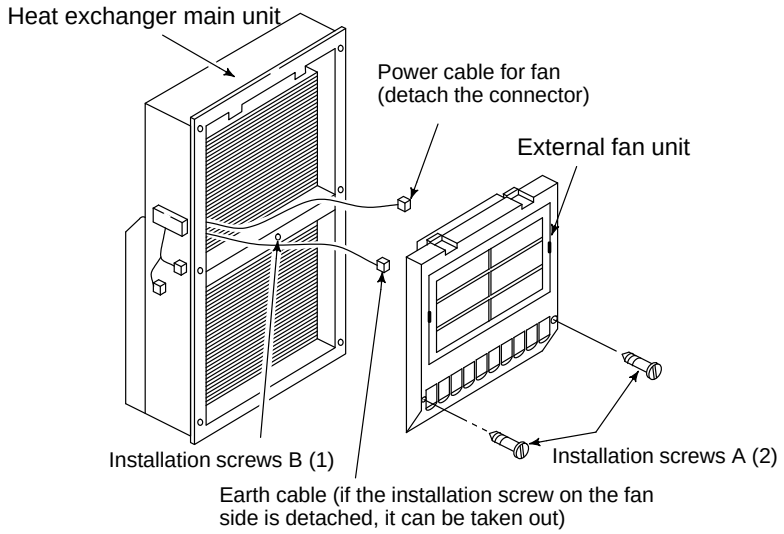

Detach the two installation screws (A) of the external fan unit, and detach the unit from the main unit by sliding it down. Detach the power source cable to the fan and the earth cable. Also detach installation screws (B).

- **Cleaning fan unit**

Method of cleaning fan unit

1 Wipe the dirt, condensation, etc., which has accumulated on the fan motor and fan installation case with a dry cloth, etc. When the condensation, etc. has accumulated and the dirt is difficult to remove, soak a cloth in neutral detergent, lightry sqeeze it and wipe away the dirt.
However, take care not to allow the detergent to enter the electrical sections such as the internal rotor of the fan motor.

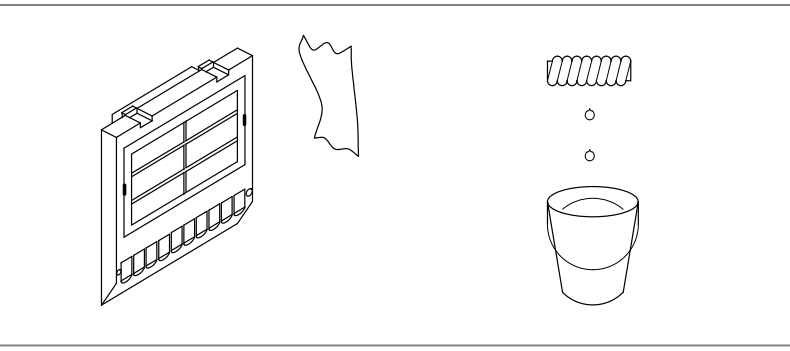

- **Cleaning heat exchanger fan**

Method of cleaning heat exchanger fan

1 Detach the heat exchanger format the unit and either blow off with air, wipe off with a dry cloth, or brush the accumulated dirt, condensation, etc.

When the dirt is especially severe

1 Detach the internal fan unit, the terminal unit, and the cable from the main unit.

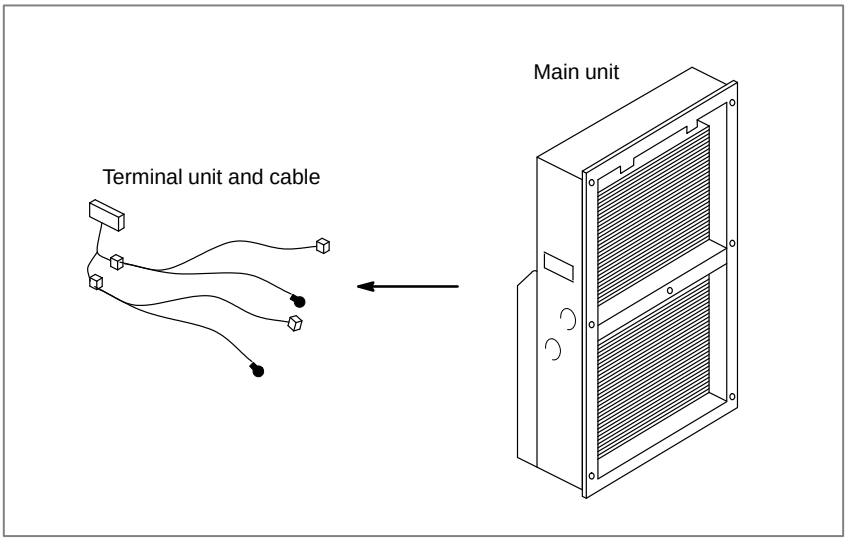

2 Using a neutral detergent, remove the dirt from the main unit fan section by brushing. At this time, take care not to bend the fin of the element.

3 After cleaning, dry well.

- **Installation**

Method of installation after cleaning

After completing cleaning of the fan unit and heat transformer.

1 Install the terminal unit and cable in the original position.

2 Install the fan unit in the original position. At this time, do not forget to connect the fan power cable and the earth cable.

2.12 HOW TO REPLACE THE COLOR LIQUID CRYSTAL DISPLAY

The color liquid crystal display is provided with a setting switch tuner for precisely adjust video signal.
This setting is required for each NC unit and the cables used to display max. quality.

- **Tuning locations**

Color Liquid Crystal Display(Rear Part)

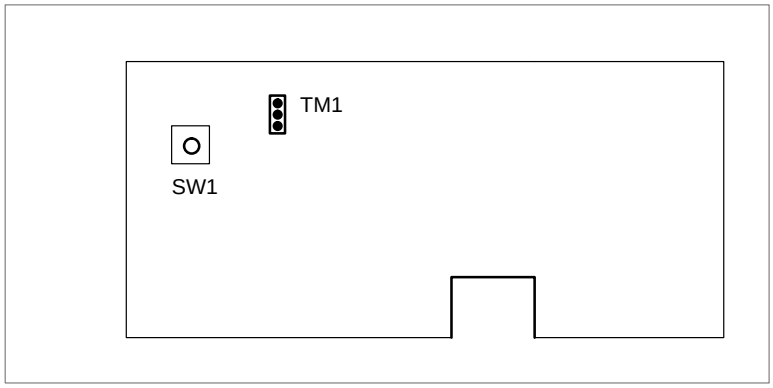

- **Tuning flicker (TM1)**

If the display flickers, set TM1 to another position. Doing so usually eliminates the flicker.

- **Setting display position in horizontal direction**

1 Screen display can be moved by dot unit in horizontal direction.
2 Adjust SW1 to the location where whole object is displayed, There is only one location, that fits a screen.
Usually it is not required to tune this setting, because the most suitable position has been set before shipment.

- **Others**

Do not change setting or the volume, etc. except above descriptions.

2.13 REPLACING THE LCD FUSE

This section describes the location and replacement of the LCD fuse.

- **Location of the LCD fuse**

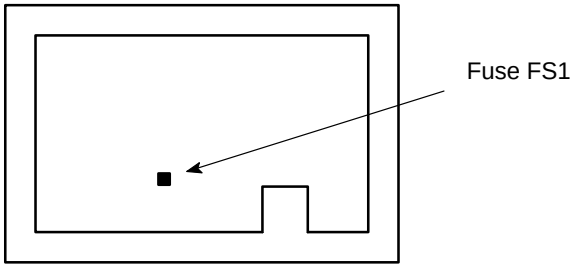

LCD Unit (Rear view)

- **Replacing the fuse**

(1) If the fuse blows, first find and eliminate the cause. Then, replace the fuse.
(2) Pull the old fuse up.
(3) Push a new fuse into the fuse holder.

- **Ordering information**

Ordering code : A02B–0200–K103 *
Rating : 5.0 A

***In–house code : A60L–0001–0290#LM50**

2.14 REPLACING THE LCD BAKLIGHT

The LCD backlight must be replaced periodically. Replace the unit in which the LCD backlight is mounted.
The LCD backlight has a life of about 10,000 hours (5,000 hours guaranteed). (During its lifetime, the backlight should maintain a brightness exceeding 50% of that when new.)
Upon reaching the end of its service life, the LCD backlight unit must be replaced. The unit can be replaced either by the user or by a FANUC service engineer.
Remark) When the screen display is not required, the display and backlight can be turned off by pressing a key.
Doing so will increase the useful life of the backlight.
Suppressing the screen display

While holding down the CAN key, press any function key (for example, the POS key).

Restoring the screen display

Press any function key (for example, the POS key).

3 INPUT AND OUTPUT OF DATA

After you change a SRAM module, you must set various data again. This chapter describes the procedures to input and output the parameters, the part programs and the tool offset values.

3.1 SETTING PARAMETERS FOR INPUT/OUTPUT 184
3.2 INPUTTING/OUTPUTTING DATA 186
3.3 INPUT/OUTPUT SUPER CAP DATA 195
3.4 INPUTTING/OUTPUTTING CAP–II DATA (16–T) 205
3.5 DUMP / RESTORE OF CAP–II DATE (16–T) 207
3.6 CLEARING CAP–II DATE (16–T) 208

3.1 SETTING PARAMETERS FOR INPUT/OUTPUT

- **Setting procedure of parameters**

1. Set to MDI mode or emergency stop state.
2. Press [OFFSET SETTING] key several times or press soft key **[SETING]** to display **SETTING (HANDY)** screen.
3. Set the cursor to **PARAMETER WRITE** and, press [1] and [INPUT] keys in this order. Here alarm 100 will be displayed.
4. Press [SYSTEM] key several times to display the following screen.

```
PARAMETER (SETTING)              O1234N12345
0000          SEQ              INI  ISO  TVC
      0    0    0    0    0    0    0    0
0001                                   FCV

      0    0    0    0    0    0    0    0
0012  RMV                   MIR
   X  0    0    0    0    0    0    0    0
   Y  0    0    0    0    0    0    0    0
   Z  0    0    0    0    0    0    0    0
   B  0    0    0    0    0    0    0    0
0020 I/O  CHANNEL
                              S    0 T0000

REF **** *** ***          10:15:30
[ F SRH ][ READ  ][       ][DELETE ][      ]
```

To make the cursor display in bit unit, press the cursor key [←] or [→] .

5. Press soft key**[(OPRT)]** and the following operation menu is displayed.

1 Soft key **[NO. SRH]** : Searched by number.
Examination) Parameter number → **[NO. SRH]**.
2 Soft key **[ON : 1]** : Item with cursor position is set to 1 (bit parameter)
3 Soft key **[OFF : 0]** : Item with cursor position is set to 0 (bit parameter)
4 Soft key **[+INPUT]** : Input value is added to the value at cursor (word type)
5 Soft key **[INPUT]** : Input value is replaced with the value at cursor (word type)
6 Soft key **[READ]** : Parameters are input from reader/puncher interface.
7 Soft key **[PUNCH]** : Parameters are output to reader/puncher interface.

6. After the parameters have been input, set PARAMETER WRITE on the SETTING screen to 0. Press [RESET] to release alram 100.
7. Convenient method

1 To change parameters in bit unit, press cursor key ⬅ or ➡,then the cursor becomes bit length and you can set parameters bit by bit (Bit parameter only).

2 To set data consecutively, use EOB key.

(Ex.1) 1234 | EOB | 4567 | EOB | 9999 | INPUT

```
0          1234
0  ⇒       4567
0          9999
0             0
```

(Ex.2) 1234 | EOB | EOB | 9999 | INPUT

```
0          1234
0  ⇒          0
0          9999
0             0
```

3 To set the same data use =.

(Ex.) 1234 | EOB | = | EOB | = | INPUT

```
0          1234
0⇒         1234
0          1234
0             0
```

4 For bit parameters,

(Ex.) 1 | 1 | EOB | = | EOB | = | INPUT

```
0 0 0 0 0 0 0 0     0 0 0 1 1 0 0 0
0 0 0 0 0 0 0 0  ⇒  0 0 0 1 1 0 0 0
0 0 0 0 0 0 0 0     0 0 0 1 1 0 0 0
0 0 0 0 0 0 0 0     0 0 0 0 0 0 0 0
```

8. After the required parameters are set, set **PARAMETER WRITE** to 0.

3.2 INPUTTING/ OUTPUTTING DATA

The main CPU memorized the following data.
Outputting the data 1/O device while the CNC is rurnning normally

(1) CNC paramter
(2) PMC parameter
(3) Pitch error compensation amount
(4) Custom macro variable values
(5) Tool compensation amount
(6) Part program (machining program, custom macro program)

3.2.1 Confirming the Parameters Required for Data Output

Be sure that data output cannot be done in an alarm status.
Parameters required for output are as follows :

	#7	#6	#5	#4	#3	#2	#1	#0
0000							ISO	

#1 (ISO) 0 : Output with EIA code
1 : Output with ISO code (FANUC cassette)

0020	Selection of I/O channel

0 : Channel 1 (JD5A OF MAIN CPU)
1 : Channel 1 (JD5A OF MAIN CPU)
2 : Channel 2 (JD5B OF MAIN CPU)
3 : Channel 3 (JD5C OF OPTION 1)

	#7	#6	#5	#4	#3	#2	#1	#0
0101	NFD				ASI			SB2

#7 (NFD) 0 : Feed is output when data is output.
1 : Feed is not output when data is output.

#3 (ASI)☆ 0 : EIA or ISO code is used for input/output data.
1 : ASCII code is used.

#0 (SB2) 0 : No. of stop bits is 1.
☆ 1 : No. of stop bits is 2.

0102	pecification number of input/output device

0	RS–232–C (control codes DC1 to DC4 used)
1	FANUC bubble cassette B1/B2
2	FANUC Floppy cassette adapter F1
3	PROGRAM FILE Mate. FANUC FA card adapter ,FANUC Floppy cassette adapter, FSP–H
4	Not used
5	Portable tape reader
6	FANUC PPR, FSP–G, FSP–H

0103	Baud Rate

1: 50 5: 200 9: 2400
2: 100 6: 300 ☆10: 4800
3: 110 7: 600 11: 9600
4: 150 8: 1200 12: 19200 [BPS]

3.2.2 Outputting CNC Parameters

In case of PPR, steps 2 and 3 are not required.

1. Select **EDIT** mode.
2. [PROG] Press PROG key and soft key **PRGRM** to select a program text.
3. Press soft key **[(OPRT)]** and soft key [▷].

   And then, put out the head of file by pressing **[FSRH]** [0] **[EXEC]**.
4. Press [SYSTEM] key and soft key **[PARAM]** to display parameter screen.
5. Press soft key **[(OPRT)]** ,and soft key [▷].
6. Press soft key **[PUNCH]** and **[EXEC]**,and the parameters are started to be output.

3.2.3 Outputting PMC Parameters

1. Select MDI mode.
2. Press [OFFSET SETTING] key then soft key **[SETTING]** to select a setting screen.
3. Set the cursor to **PARAMETER WRITE** and input 1 and INPUT. At this time, alarm 100 will be generated.
4. Press [SYSTEM] key and soft key **[PMC]**.
5. Press soft key **[PMCPRM]** and soft key **[KEEPRL]**
6. Set the cursor to K17 and set the first bit to 1.
   [X] [X] [X] [X] [X] [X] [1] [X] [INPUT]
   Where, mark x is a former value
   Thus, data input/output screen has been selected.
7. Select EDIT mode.
8. Press soft key [◁] then key [▷].
9. Press soft key **[I/O]** and set the parameters on I/O.
   Item selection cursor moves to the following item after data of an item is set.
10. In CHANNEL NO item, input [1] [INPUT] to select I/O channel 1.
11. In DEVICE item, press soft key **[FDCAS]** to select the floppy cassette.
12. In KIND DATA item, press soft key **[PARAM]**.
13. In FUNCTION item, press soft key **[WRITE]**.
14. In FILE No item, specify a file name. In this example input as follows:
    [@] [P] [M] [C] [INPUT]
15. Press soft key **[EXEC]**. Then PMC parameters are started to be output.
16. After the PMC parameters have been output, set PARAMETER WRITE to 0.
17. Press [RESET] to release alarm 100.

3.2.4 Outputting Pitch Error Compensation Amount

1. Select EDIT mode.
2. Press [SYSTEM] key several times, press soft key **[PARAM]**,and **[PITCH]** to select the SETTING screen for pitch error amount.
3. Press soft key **[(OPRT)]** and [▷].
4. Press soft key **[PUNCH]** and **[EXEC]**, then pitch error compensation amount is started to be output.

3.2.5 Outputting Custom Macro Variable Values

When custom macro function is equipped, values of variable no. 500 and later are output.

1. Press [OFFSET SETTING] key.
2. Press [▷] key and soft key **[MACRO]** to select custom macro variable screen.
3. Press soft key **[(OPRT)]** and then key [▷].
4. Press soft key **[PUNCH]** and **[EXEC]**, then custom macro variable values are output.

3.2.6 Outputting Tool Compensation Amount

1. Select EDIT mode.
2. Press [OFFSET SETTING] key and soft key **[OFFSET]** to display the tool compensation amount screen.
3. Press **[(OPRT)]** key and soft key [▷].
4. Press soft key **[PUNCH]** an **[EXEC]** key, and the tool compensation amount is started to be output.

3.2.7 Outputting Part Program

1. Confirm the following parameters. If 1 is set, set to the MDI mode and set it to 0.

	#7	#6	#5	#4	#3	#2	#1	#0
3202				NE9				NE8

#4 (NE9) ☆ 0 : Programs of 9000s are edited.

1 : Programs of 9000s can be protected.

#0 (NE8) ☆ 0 : Programs of 8000s are edited.

1 : Programs of 8000s can be protected.

2. Select EDIT mode.
3. Press PROG key and press soft key **[PRGRM]** to display program text.
4. Press **[(OPRT)]** key and press soft key [▷].
5. Input a program number to be output. To output all programs input as:
   [O] [–] [9] [9] [9] [9]
6. Press **[PUNCH]** and **[EXEC]** key, then program output is started.

3.2.8 Inputting CNC Parameters

1. Set to the emergency stop state.
2. Confirm that the patameters required to input data is correct.
   1 Press OFFSET/SETTING key several times, and press **[SETING]** to display SETTING screen.
   2 Confirm that PARAMETER WRITE=1.
   3 Press SYSTEM key to select the parameter screen.
   4

0020	Selectionof I/O channel

☆ 0 : Channel 1 (JD5A of MAIN CPU board)

1 : Channel 1 (JD5A of MAIN CPU board)

2 : Channel 2 (JD5B of MAIN CPU board)

3 : Channel 3 (JD5C of Option 1)

5

	#7	#6	#5	#4	#3	#2	#1	#0
0101	NFD				ASI			SB2

#7 (NFD) 0 : Feed is output when punching out.

1 : Feed is not output when punching out.

#3 (ASI) 0 : EIA or ISO code is used.

1 : ASCII code is used.

#0 (SB2) 0 : No. of stop bits is 1.

☆ 1 : No. of stop bits is 2.

6

0102	Specification number of I/O device

0	RS–232–C (control codes DC1 to DC4 are used.)
1	FANUC Bubble cassette B1/B2
2	FANUCFloppy cassette F1
3	PROGRAM FILE Mate, FANUC FA Card adapter, FANUC Floppy casette adapter, FSP–H, FANUC Handy File
4	RS–232–C (Control codes DC1 to DC4 are not used)
5	Portable tape reader
6	FANUC PPR, FSP–G, FSP–H

7

0103	Baud rate

1:	50	5:	200	9:	2400
2:	100	6:	300	☆10:	4800
3:	110	7:	600	11:	9600
4:	150	8:	1200	12:	19200 [BPS]

3. Press soft key **[(OPRT)]** and soft key ▷
4. Press soft key **[READ]** and **[EXEC]**. Then input of parameters are started.
5. Because alarm 300 will generate for the system with absolute pulse coder, set parameter 1815#5 to 0.

	#7	#6	#5	#4	#3	#2	#1	#0
1815			APCx					

#5(APCx) 0 : Position detector is other than absolute pulse coder.

1 : Position detector is absolute pulse coder.

6. After the parameters have been input, turn off the power once then turn it on.

3.2.9 Inputting PMC Parameters

Set the emergency stop state.
Operation of 12 is not required when PPR is used.

1. Turn off (KEY4=1) the program protect key.
2. Press [OFFSET SETTING] key and soft key **[SETTING]** to select the SETTING screen.
3. Confirm that PARAMETER WRITE=1.
4. Press [SYSTEM] key and soft key **[PMC]**.
5. Press soft key **[PMCPRM]** and soft key **[KEEPRL]**.
6. Set the cursor to K17 and set bit 1 to 1.
   [0] [0] [0] [0] [0] [0] [1] [0] [INPUT].
7. Press [◁] key and [▷] key.
8. Press soft key **[I/O]** and set the parameters required for I/O.
   Item selection cursor displays the next item after an item is set.
9. In CHANNEL item , press [1] [INPUT] to select channel 1.
10. In DEVICE item, press **[FDCAS]** key to select the floppy cassette.
11. In FUNCTION item, press soft key **[READ]** to input data
12. In FILE NO item, press [2] [INPUT] to select file no. 2.
13. Press soft key **[EXECT]** and the PMC parameters are started to be input.
14. After data has been read, turn off power and turn it on.

3.2.10 Inputting Pitch Error Compensation Amount

1. Release the emergency stop and select EDIT mode.
2. Confirm that PARAMETER WRITE=1 on the setting screen.
3. Press [PROG] key and soft key **[PRGRM**] to display program contents.
4. Press soft key **[(OPRT)]**, [▷] , **[F SRH]**, and [3] **[EXEC]** to select the pitch error compensation file.
5. Press [SYSTEM] key several times, soft key **[PARAM]**, [▷] and **[PITCH]** to select the screen for pitch error compensation amount.
6. Press soft key **[(OPRT)]** and [▷] key.
7. Press soft key **[READ**] and **[EXEC]**, then the pitch error compensation amount is started to be input.
8. After data has been input, press [OFFSET SETTING] key twice to display the SETTING screen and return the PARAMETER WRITE to 0.

3.2.11 Inputting Custom Macro Variable Values

If the system is equipped with the custom macro fucntion, input the variable values.
For PPR, item 4 is not required.

1. Confirm that EDIT mode is selected.
2. Turn off the program protect key (KEY2=1).
3. Press [PROG] key then soft key **[PRGRM]** to display program contents.
4. Press soft key **[(OPRT)]**, [▷], **[F SRH]**, and [X] **[EXEC]** to select a file.
5. Press soft key **[(OPRT)]** and key [▷].
6. Press address O, a program number (0001 for example), soft key **[READ]** and **[EXEC]** key, then custom macro variable values are started to be input.
   Input a program number that is not used.
7. Select MEMORY mode on the machine operator's panel and press cycle start button.
   When the program is executed, macro variables are set.
8. Press [OFFSET SETTING] key, [▷] key and soft key **[MACRO]** to select the custom macro variable screen.
9. Press 500 and soft key **[NO SRH]** to display variable number 500 and confirm the custom macro variables are set correctly.
   Of the data displayed, 0 and vacant differ in meaning.
   Vacant is an undefined variable. To set vacant, press soft key **[INPUT]**.
10. Select EDIT mode again.
11. Press [PROG] key to select the program display screen.
12. Press address O and a program number (0001 for example) ,then press [DELETE] to delete the program.

3.2.12 Inputting Tool Compensation Amount

Item 4 is not required for PPR.

1. Select the EDIT mode.
2. Turn off the program protect (KEY=1).
3. Press [PROG] key, and press soft key**[PRGRM]** to display the program contents screen.
4. Press soft key **[(OPRT)]**, [▷], **[F SRH]**, and [×] **[EXEC]** to select the tool compensation amount file.
5. Press [OFFSET SETTING] key, and soft key **[OFFSET]** to display the tool compensation amount screen.

6. Press soft key **[(OPRT)]** and [▷] key.
7. Press **[READ]** key and **[EXEC]** key and data input is started.

3.2.13 Inputting Part Programs

Confirm the following parameters. If 1 is set, set it to 0. (Change it in MDI mode).

	#7	#6	#5	#4	#3	#2	#1	#0
3201		NPE					RAL	

#6 (NPE) When programs are registered in part program storage area, M02,M30 and M99 are:

0 : regarded as the end of program.

☆ 1 : not regarded as the end of porgram.

#1 (RAL) When programs are registered:

☆ 0 : All programs are registered.

1 : Only one program is registered.

	#7	#6	#5	#4	#3	#2	#1	#0
3202				NE9				NE8

#4 (NE9)

☆ 0 : Programs of 9000s can be edited.

1 : Programs of 9000s are protected.

#0 (NE8)

☆ 0 : Programs of 8000s can be edited.

1 : Programs of 8000s are protected.

For PPR, item 4 is not required.

1. Confirm that mode is EDIT mode.
2. Turn off the program protect (KEY3=1).
3. Press [PROG] key and press soft key **[PRGRM]** to select a part program file.
4. Press soft key **[(OPRT)]**, [▷] **[F SRH]**, and [X] **[EXEC]** to select a part program file.
5. Press soft [◁] key ,**[(OPRT)]** and [▷] key.
6. Press soft key **[READ]** and **[EXEC]**, then data input is started.

3.3 INPUT/OUTPUT SUPER CAP DATA

3.3.1 Input/Output of Conversational Data in a Lump(Super CAP M)

The following operation allows all the data used for Super CAP M to be input and output in a lump.

1. Confirm the parameters shown below:
   P0020: I/O CHANNEL (select I/O device) : 0
   P0102: I/O device number : 3
   P0103: Baud rate for 4800 bauds : 10
   for 9600 bauds : 11
2. Select EDIT mode.
3. Press function key PROG and press soft key **[CAP]**.
4. Press soft key **[8]** (C.A.P DATA) on the basic menu screen.[Series16] Conversational Data Screen

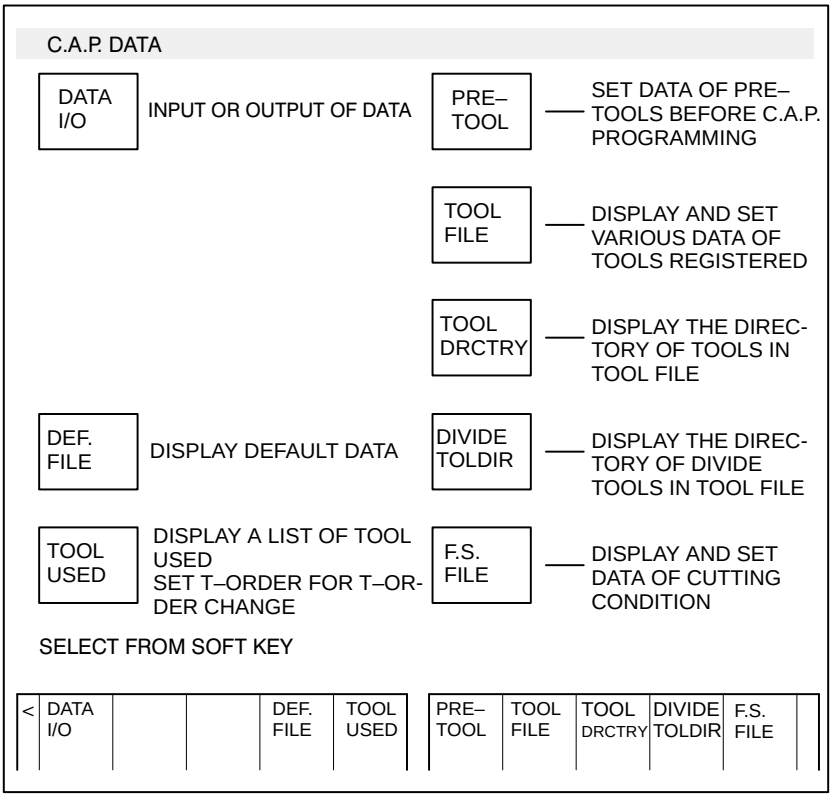

5. Press soft key **[DATA I/O]**.

[Series16] Conversational Data Screen

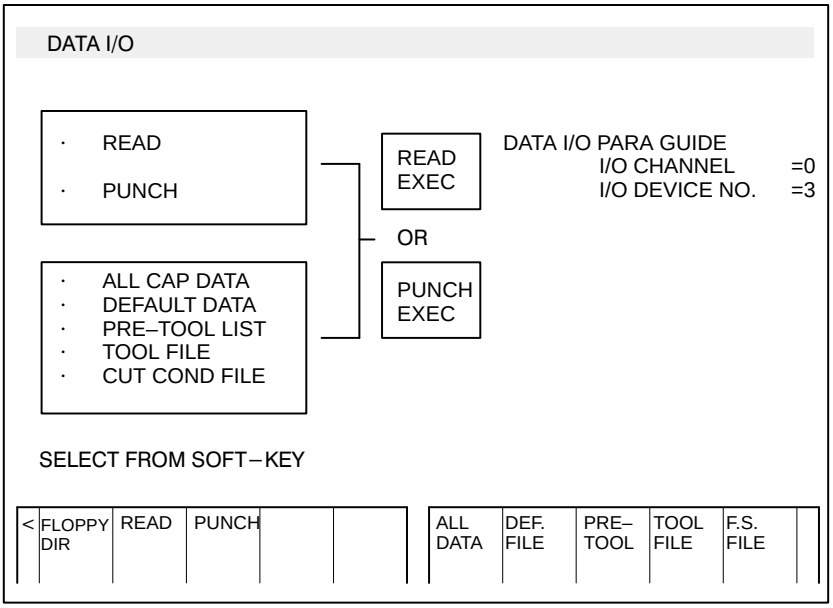

6. Press soft key **[READ]** or **[PUNCH]**.
7. Press soft key **[ALL DATA]**.
8. For read, input a file no. and press soft key **[READ EXEC]**.(Specify a file no. for all data).

·For punch, press soft key [PUNCH EXEC].

The above operation reads and punches default data, pre–tool list, tool file and F.S. file in a lump.

3.3.2 Input and Output of Each File

You can input and output files individually.
Execute the same operations from step **1** to **6** in the previous section 3.3.1.

(1) Reading or Punching default files

7 Press **[DEF. FILE]**.

8 · For reading, input a file no. for default data and press soft key **[READ EXEC]**. (Specify a file number of default file).
· For punching, press **[PUNCH EXEC]**.

(2) Reading or punching pre–tool list

7 Press PRE–TOOL.

8 · For reading, press a file number and soft key **[READ EXEC]**. (Specify a file number of pre–tool list).
· For punching, press soft key **[PUNCH EXEC]**.

(3) Reading or Punching tool file

7 Press TOOL FILE.

8 · For reading, press a file number and pres soft key **[READ EXEC]**. (Specify file number of tool file).
· For punching, press **[PUNCH EXEC]**.

(4) Reading or Punching F, S file

7 Press F.S. FILE.

8 · For reading, press a file no. and press soft key **[READ EXEC]**.(Specify a file no. of F.S. FILE).
· For punching, press **[PUNCH EXEC]**.

3.3.3 Output of CAP data (Super CAP T)

This feature allows NC parameters, offsets, NC programs, PMC parameters and so on to be input/output from/to a general I/O device such as FANUC cassette adapter or the like.

1. Data that can be input/output
   - (1) NC parameters: All parameters except for optional parameters and a parameter that specifies the no. of axes.(No. 1010)
   - (2) :Offset values: All data of wear/geometry data
   - (3) NC programs: All the NC programs
   - (4) PMC parameters: All data of counter, keep relay, timer and other data
   - (5) Tool File: All data of tool data file, F.S. data, roughness data, pre–tool list and chuck/tailstock figure data.
   - (6) CAP program: All the CAP program (Cannot input/output individual program)

Note
You should input/output NC parameters separately. You can input/output other data in a lump.

2. Operation for inputting/outputting data in a lump
   (1) Connect external I/O device and set necessary parameters.
   - Channel at NC side=0
   - Stop bit=2
   - Parity=No
   - Length of character=8
   - Baud rate=Depends on NC parameter no. 0103.
   - XON/OFF control=Yes

   (2) Select EDIT mode. For path 2, select screen of tool post 1.
   (3) Display basic menu screen, press [+] key to display the 2 nd page soft keys.
   (4) Press [17] to display the following data I/O menu screen.

[Data I/O menu Screen]

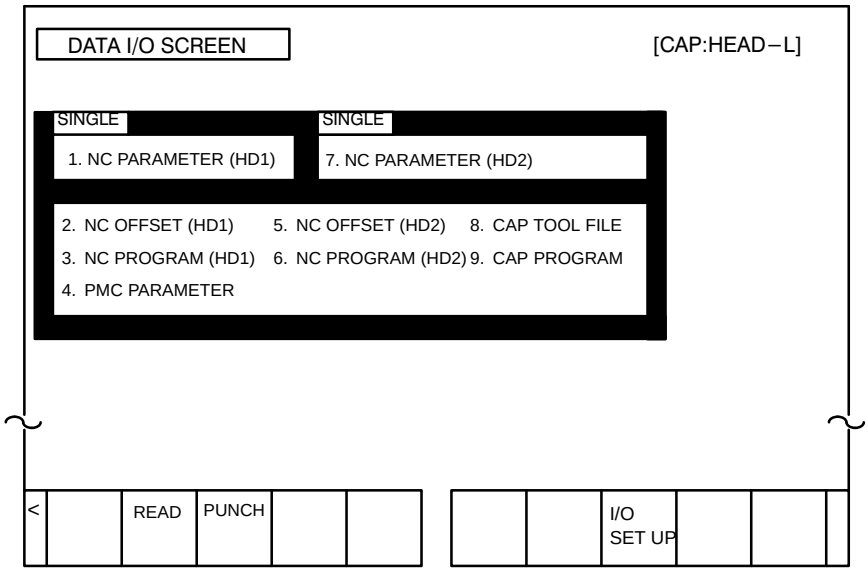

Note
For 16–TB, data select menu on tool post 2 is not displayed.

(5) Press **[PUNCH]** and the following screen is displayed.

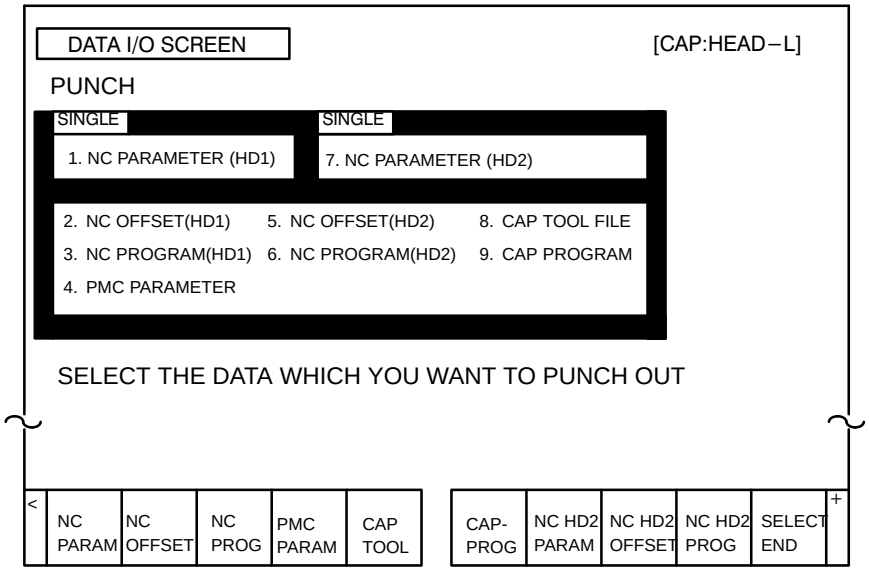

Note) For 16/18–TB, the following soft keys are displayed.

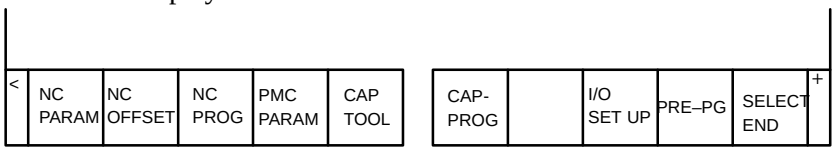

(6) Press a soft key corresponding to data to be output. Selected data is displayed by reverse character of green color.
Select all the data to be output and press **[SELECT END]**.

Note

NC parameters can be output only separately. If NC parameters are selected to be output with other data, other data is canceled.

[NC PROG] or **[NC HD2 PROG]**
(For path 2, when **[NC PROG]** is pressed, the following screen is displayed.)

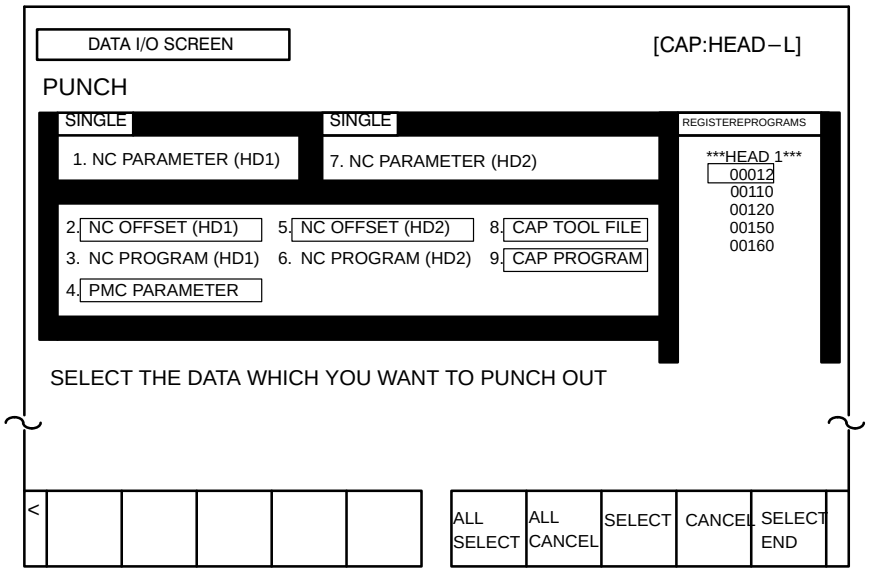

[ALL SELECT] Press this key to output all the programs.When you press this key, the following menu is displayed.

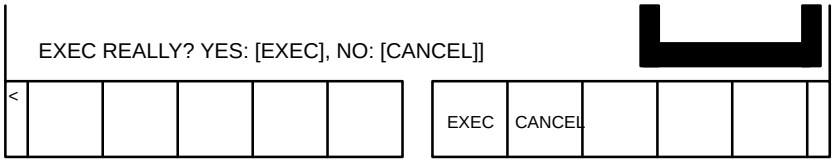

To execute punching all the programs, press **[EXEC]** and when it is not needed, press **[CANCEL]**.

[ALL CANCEL] Press this key to cancel outputting all the data. When this key is pressed, the same soft key as when **[ALL SELECT]** is pressed is displayed. To execute cancelling, press **[EXEC]**; to cancel cancelling, press **[CANCEL].**

[SELECT] When you specify a NC program to be punched, move the cursor to the program number and press this key.

[CANCEL] To cancel outputting NC programs, press this key.

[SELECT END] When you finsh specification of punching, press this key.

(7) The following screen is displayed when you press **[SELECT END]**. To start punching, press **[EXEC]** and to cancel punching, press **[CANCEL]**.

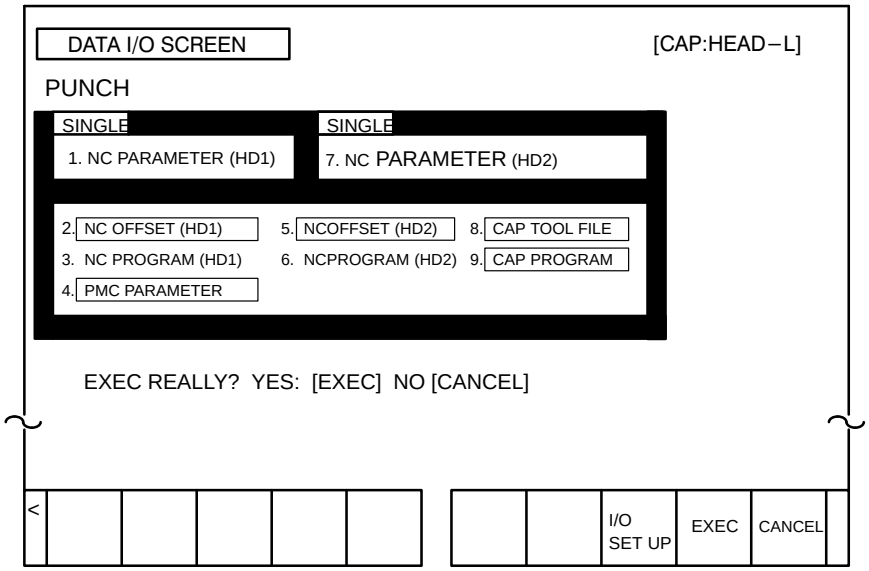

When data punching starts, “OUTPUTTING” blinks on the lower right corner of the screen. The data being output is indicated by blinks of yellow reverse characters. When data outputting finishes, the data is shown in blue color. If outputting finishes with an error generated, the data is shown in red.

Notes

1 The data format output by the above data input/output in a lump funciton is different from the data format input/output in an individual operation. Therefore, output data by this function cannot be used for inputting.
2 Data format is different between 16–TB and 16–TTB.
3 The data that can be input by the input/output in a lump function is limited to data output by the same function.
4 The range of PMC parameters to be output can be specified by the following NC parameter.

NC parameter

9090	PMCIOS

PMCIOS
:The start address number of D area of the PMC parameters to be output.

9091	PMCIOE

PMCIOE
:The end address number of D area of PMC parameters to be output.

No.9090(PMCIOS)=0, No.9091(PMCIOE)=0
: All the PMC parameters including keep relays, counters, timers and data are output.

No.9090(PMCIOS)=No.9091(PMCIOE) : 0
: D area data (one data) of the specified address number is output.

No.9090(PMCIOS) < No.9091(PMCIOE)
: D area data of PMC parameters from the specified starting address number to the ending address number are output.

No.9090(PMCIOS) > No.9091(PMCIOE)
: All the data in D area are output.

3.3.4 Inputting CAP data (Super CAP T)

The data output by the input/output in a lump function mentioned in 3.3.3 can be input in a lump by the following operation;

1. Set optional parameters required and the parameter for setting the number of axes (parameter no. 1010) beforehand.
2. Connect an I/O device and set the corresponding parameters required as the same as output operation.
3. Select EDIT mode. Select Head 1 screen for path 2.
4. Release protection according to each data to input.
   1) NC parameter : Set setting data “PARAMETER WRITE” to 1.
   2) Offset amount : Turn off protection of offset data (KEY1=1).
   3) NC program : Turn off program protect (KEY3=1).
   4) PMC parameter : Set setting data “PARAMETER WRITE” to 1.
   5) Tool File : Turns off offset data protection (KEY1=1)
   6) CAP program : Turns off program protect (KEY3=1)

5. Display the DATA I/O menu screen
6. Press **[READ]** and the following screen is displayed.

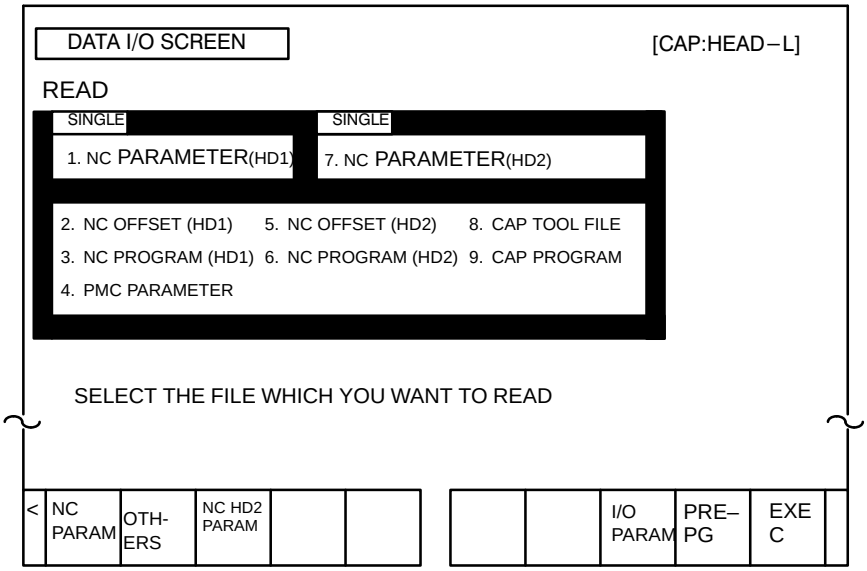

Notes
1 For path 1, data select menu on HEAD 2 is not displayed.
2 When the I/O device is other than FANUC Cassette adapter, soft keys [NCPARAM],[OTHERS],and [NC HD2 PARAM] are not displayed.

7. Rewind the data to its head when an I/O device other than FANUC Cassette adapter is used.
   When the FANUC Cassette adapter is used, since the data is called automatically, it is not needed to execute this operation.

8. Press **[NC PARAM]** to input the parameters on the HEAD 1; press **[NCHD2 PARAM]** to input the NC parameters on HEAD 2.
   To input other data than NC parameters, press **[OTHERS]**.
   The selected data is shown in green reverse character. However, if other data than parameters is specified, the data actually read is unknown and all the data is shown in green reverse character.

9. Press **[EXEC]** and the following soft keys are displayed.

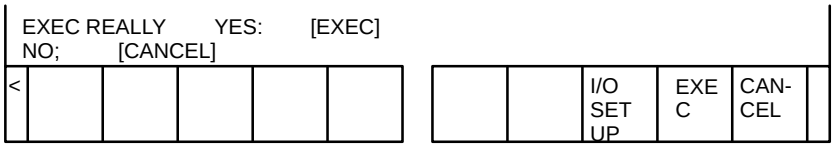

10. Press **[EXEC]** to start data reading or press **[CANCEL]** to cancel data inputting.
    The data other than NC parameter can be input in a lump if those data was output in a lump.
    While the data is input, "INPUTTING" is displayed on the lower right of the screen. The data being input is shown in yellow by reverse character in blinking. When data is input correctly, it is indicated by blue; if an error occurs, the data is displayed in red.

3.4 INPUTTING/OUTPUTTING CAP–II DATA(16–T)

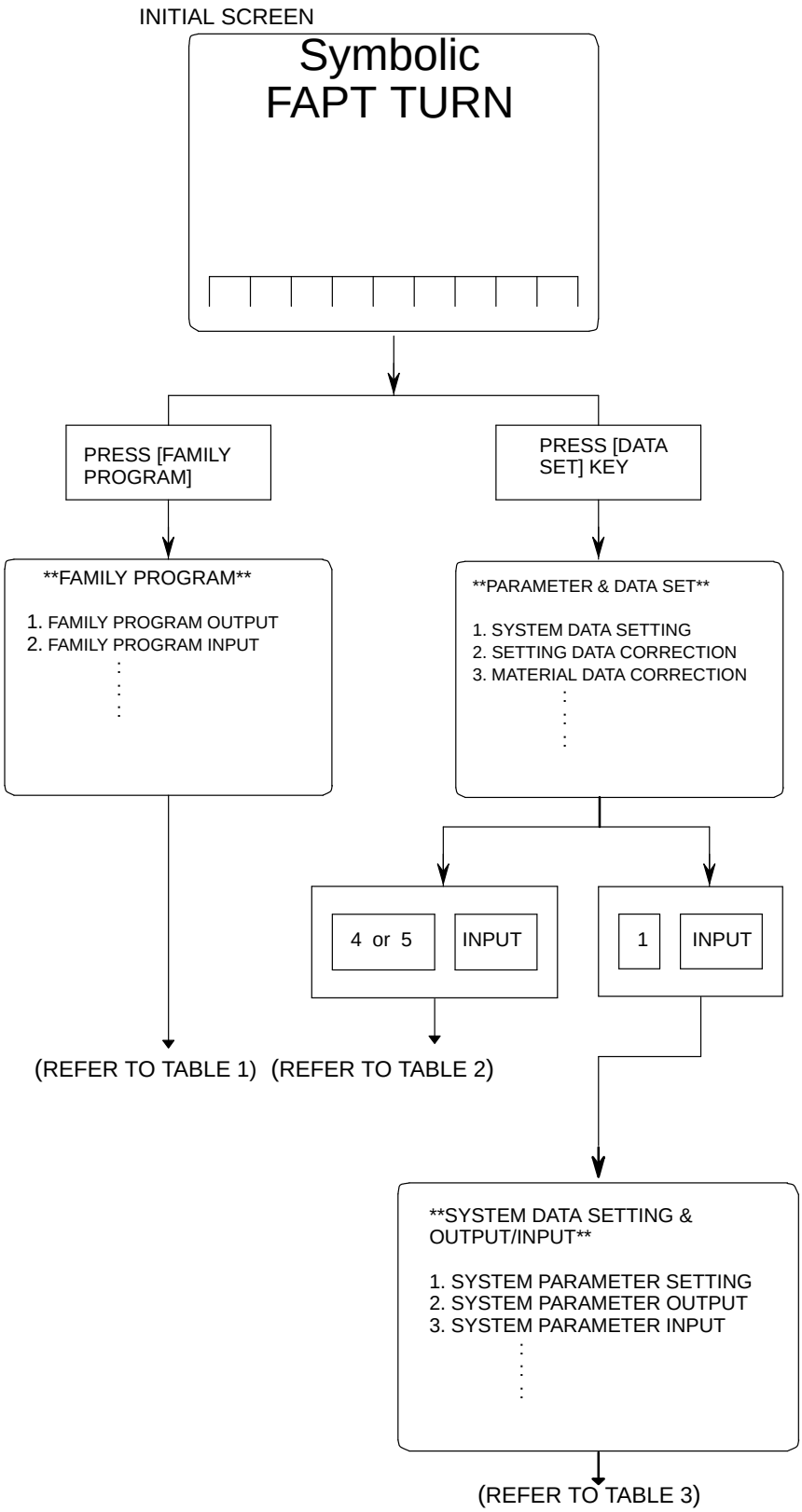

[TABLE 1] Input/Output of Family Program"INPUT"

I/O	Item	Operation on I/O device	Remarks
Input	Family program	2, n "INPUT"	n=P⇒FANUC PPR n=B⇒FANUC Cassette n=C⇒Sub Memory *When n is omitted, parameter no. 15 becomes valid.
	Sub cycle	5, n "INPUT"	
Output	Family program	1, n "INPUT"	
	Sub cycle	4, n "INPUT"	

[TABLE 2] Input/Output of Material Data

I/O	Item	Operation on I/O device	Remarks
Input	Material data	5, n "INPUT"	n=P⇒FANUC PPR n=B⇒FANUC Cassette n=C⇒Sub Memory *When n is omitted, parameter no. 15 becomes valid.
Output	Material data	4, n "INPUT"	

[Table 3] Input/Output of system parameters and other data.

I/O	Item	Operation on I/O device	Remarks
Input/ Read	System parameter	3, n "INPUT"	1"INPUT"⇒"SAVE ENDY
	MTF	7, n "INPUT"	5"INPUT"⇒"SAVE ENDY
	Tool data	11, n "INPUT"	9"INPUT"⇒"SAVE ENDY
	Setting	14, n "INPUT"	n=P⇒FANUC PPR n=B⇒FANUC Cassette
	Graphic data	16, n "INPUT"	
Out-put/ Re-gis-tera-tion	System parameter	2, n "INPUT"	
	MTF	6, n "INPUT"	
	Tool data	10, n "INPUT"	
	Setting	13, n "INPUT"	
	Graphic data	15, n "INPUT"	
Collati on	System parameter	4, n "INPUT"	
	MTF	8, n "INPUT"	
	Tool data	12, n "INPUT"	

3.5 DUMP/RESTORE OF CAP–II DATA (16 – T)

The sub memory is stored in RAM module on the Option 3 board (board for CAP–II). The procedure below describes a method to input and output the data in sub memory, which is used when Option 3 board or RAM module is replaced.

3.5.1 Kind of Data in Sub Memory

1. System parameter (FAPT–SYS. PARAM.)
2. MTF (FAPT–MTF)
3. Setting data (FAPT–SETTING)
4. Tool data
   - Turning tool (FAPT–TOOL)
   - C axis tool
5. Graphic data (FAPT–GRAPHIC)
6. Files
   - Family program (FAPT–FAMILY)
   - Material file (FAPT–MATERIAL)
   - Sub cycle file (FAPT–SUB. CYCLE)
7. Initial screen registration command data

3.5.2 Operation

- **Outputting data (Dump)**

1. Display the screen of Symbolic FAPT TURN.
2. To output data on FANUC Cassette, press keys as follows:
   [AUXILIARY]⇒ D U M P , B INPUT
   Be careful that data is memorized from top of the file.
   To output data on FANUC PPR, press keys as follows:
   [AUXILIARY]⇒ D U M P , P INPUT

- **Inputting data (Restore)**

1. Hold SP key and turn on power.
2. To input data from FANUC Cassette, press keys as follows :
   [AUXILIARY]⇒ R S T R , B INPUT
   To input data from FANUC PPR, press keys as follows :
   [AUXILIARY]⇒ R S T R , P INPUT
3. Turn off the power once.

3.6 CLEARING CAP–II DATA (16 – T)

3.6.1 Deleting File Name and Files

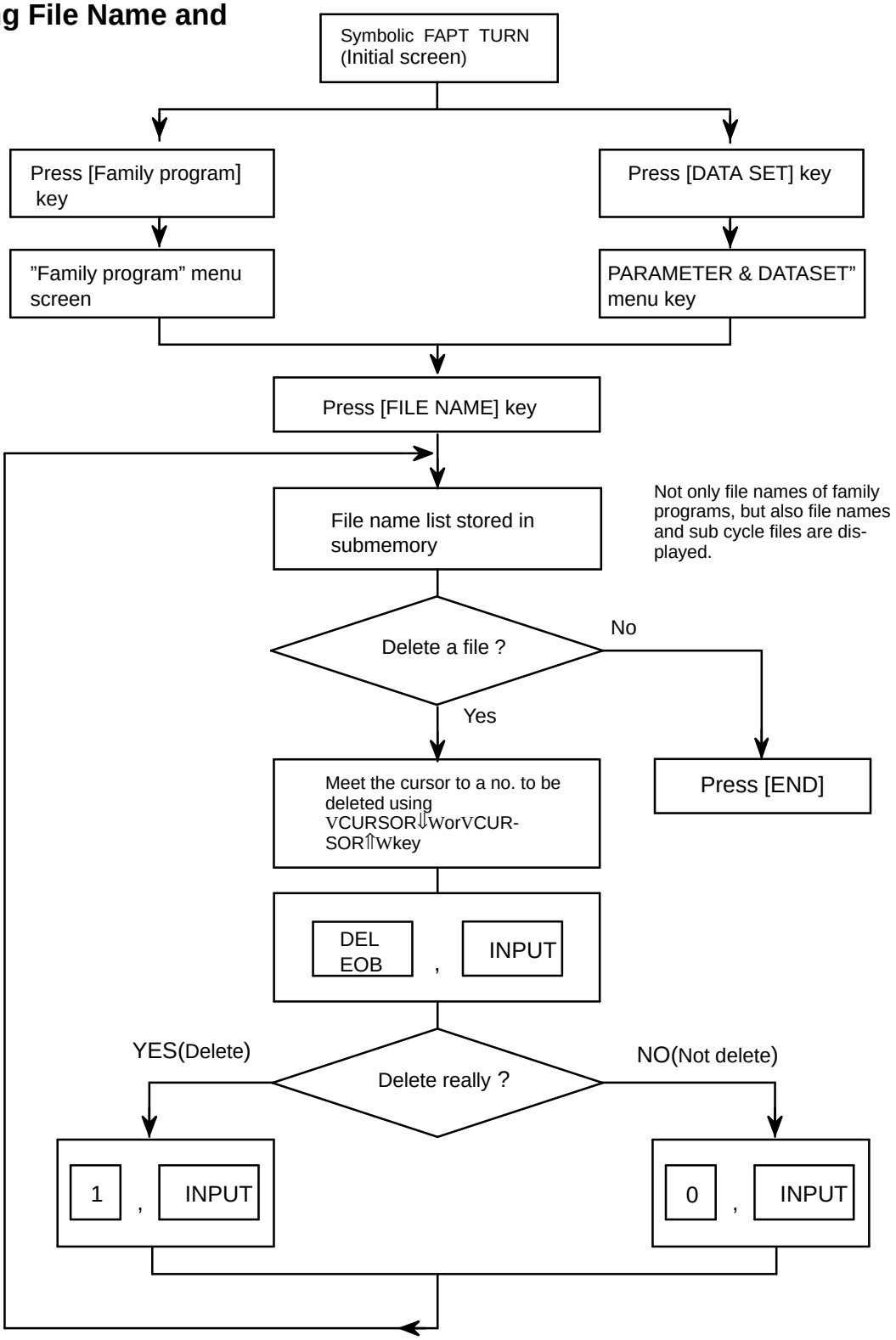

3.6.2 Clearing CAP–II Memory

1. Press [SP] while turning on power.
2. Press [AUXILIARY]and press
   [C] [F] [I] [N] [T] [INPUT]

4 INTERFACE BETWEEN NC AND PMC

This chapter describes the signals between the machine operator's panel, magnetics cabinet and the PMC, connection of the signals between PMC and CNC, and confirmation method of on/off state of these signals.
It also describes system configuration of PMC, parameters of PMC, ladder and how to display time chart of the signals on the CRT.
It also describes a method of inputting/outputting PMC parameters to an external device.

4.1 GENERAL OF INTERFACE 211
4.2 SPECIFICATION OF PMC 212
4.3 PMC SCREEN 218
4.4 LIST OF SIGNALS BY EACH MODE 237
4.5 SIGNAL AND SYMBOL CORRESPONDENCE TABLE 239

4.1 GENERAL OF INTERFACE

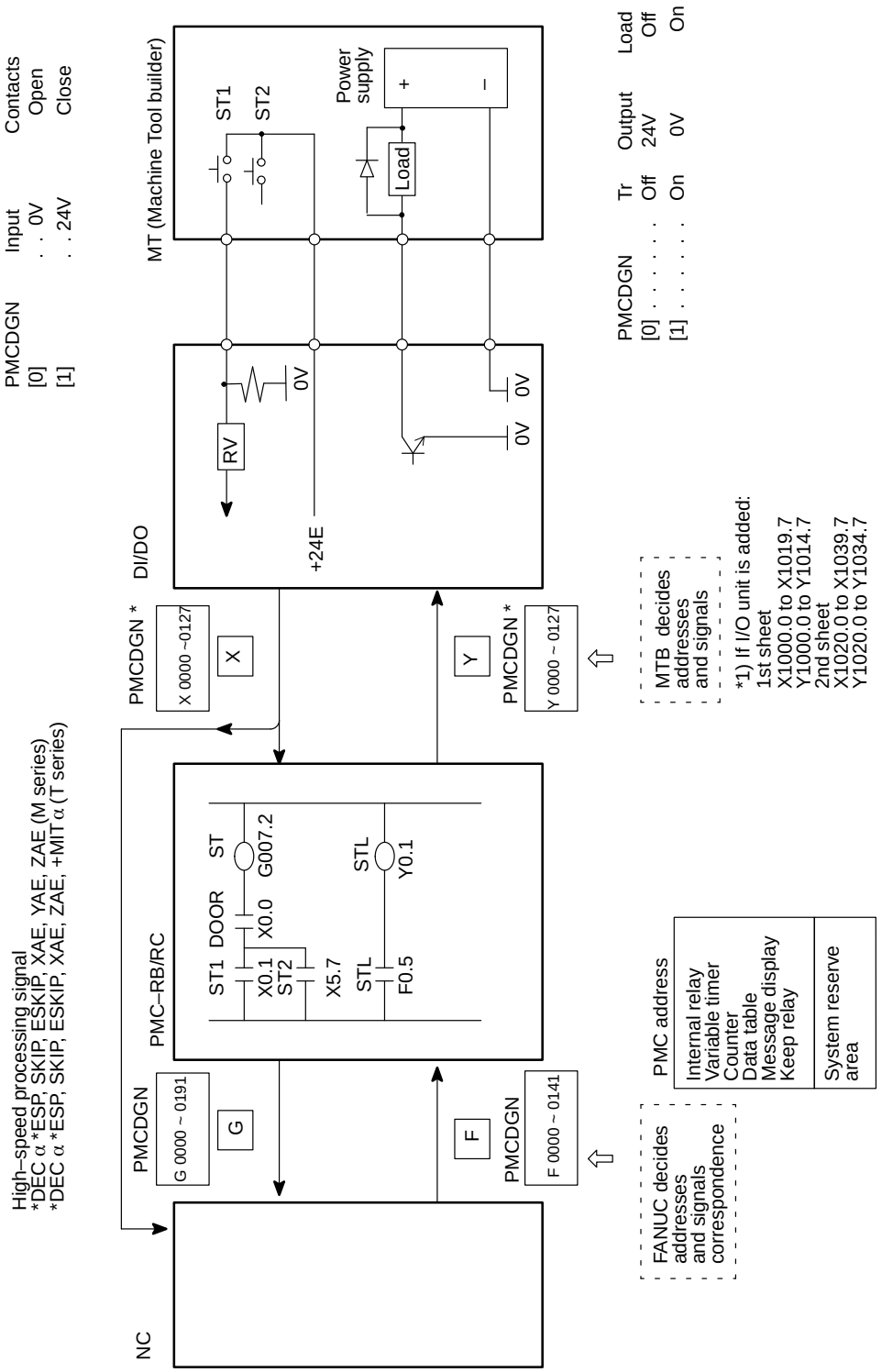

4.2 SPECIFICATION OF PMC

4.2.1 Specification

Model		PMC–RA1	PMC–RB3	PMC–RB4	PMC–RC3	PMC–RC4
Programming method language		Ladder	Ladder	Ladder Step sequence	Ladder C	Ladder C Step sequence
Number of ladder level		2	2	2	3	3
Level–1 Cycle Time		8 ms	8 ms	8 ms	8 ms	8 ms
Basic Instruction Execution Time		5.0 (μs/step)	1.0 (μs/step)	1.0 (μs/step)	0.10 (μs/step)	0.1 (μs/step)
Program capacity						
• Ladder (step)		Approx. 3,000 Approx. 5,000	Approx. 5,000 Approx. 8,000 Approx. 12,000 Approx. 16,000 Approx. 24,000	Approx. 5,000 Approx. 8,000 Approx. 12,000 Approx. 16,000 Approx. 24,000	Approx. 16,000 Approx. 24,000	Approx. 16,000 Approx. 24,000
• Symbol/comment (Note 1)		1 to 128KB	1 to 128KB	1 to 128KB	1 to 128KB	1 to 128KB
• Message		0.1 to 64KB	0.1 to 64KB	0.1 to 64KB	0.1 to 64KB	0.1 to 64KB
• Language only					max. 896KB	max. 896KB
Instruction	(Basic) (Function)	12 kinds 48 kinds	14 kinds 67 kinds	14 kinds 67 kinds	14 kinds 69 kinds	14 kinds 69 kinds
Internal relay	(R)	1100 byte	1618 byte	3200 byte	1618 byte	3200 byte
Message request	(A)	25 byte	25 byte	125 byte	25 byte	125 byte
Non–volatile						
• Var. Timer	(T)	80 byte	80 byte	300 byte	80 byte	300 byte
• Counter	(C)	80 byte	80 byte	200 byte	80 byte	200 byte
• Keep relay	(K)	20 byte	20 byte	50 byte	20 byte	50 byte
• Data table	(D)	1860 byte	3000 byte	8000 byte	3000 byte	8000 byte
Subprogram	(P)	–	512 programs	2000 programs	512 programs	2000 programs
Label	(L)	–	9999 labels	9999 labels	9999 labels	9999 labels
Fixed timer		Timer No. 100 devices specified	Timer No. 100 devices specified	Timer No. 100 devices specified	Timer No. 100 devices specified	Timer No. 100 devices specified
Input/output						
• I/O Link	(I)	1024 points max.	1024 points max.	1024 points max.	1024 points max.	1024 points max.
	(O)	1024 points max.	1024 points max.	1024 points max.	1024 points max.	1024 points max.
• I/O card	(I)	312 point max.	312 point max.	312 point max.	312 point max.	312 point max.
(Note 2)	(O)	240 point max.	240 point max.	240 point max.	240 point max.	240 point max.
Sequence program storage media		Flash memory	Flash memory	Flash memory	Flash memory	Flash memory

Notes
1 Normal size of a symbol, a comment, and a message are 32KB, and 2.1KB, respectively. Max. size of a symbol and a comment are each 64KB.
2 These points are max.points, when two sheets of I/O cards have been mounted.

4.2.2 Address

Character	Signal description	Model				
		FS–18B	FS–16B/18B			
		PMC–RA1	PMC–RB3	PMC–RB4	PMC–RC3	PMC–RC4
X	Input signal from the machine to the PMC (MT to PMC)	X0～X127 X1000～X1013	X0～X127 X1000～X1019	X0～X127 X1000～X1019	X0～X127 X1000～X1019	X0～X127 X1000～X1019
Y	Output signal from the PMC to the machine (PMC to MT)	Y0～Y127 Y1000～Y1013	Y0～Y127 Y1000～Y1014	Y0～Y127 Y1000～Y1014	Y0～Y127 Y1000～Y1014	Y0～Y127 Y1000～Y1014
F	Input signal from the NC to the PMC (NC to PMC)	F0～F255 F1000～F1255	F0～F255 F1000～F1255	F0～F511 F1000～F1511 F2000～F2511	F0～F255 F1000～F1255	F0～F511 F1000～F1511 F2000～F2511
G	Output signal from the PMC to NC (PMC to NC)	G0～G255 G1000～ G1225	G0～G255 G1000～ G1225	G0～G511 G1000～ G1511 G2000～ G2511	G0～G255 G1000～ G1225	G0～G511 G1000～ G1511 G2000～ G2511
R	Internal relay	R0～R999 R9000～ R9099	R0～R1499 R9000～R9117	R0～R2999 R9000～R9199	R0～R1499 R9000～R9117	R0～R2999 R9000～R9199
A	Message request signal	A0～A24	A0～A24	A0～A124	A0～A24	A0～A124
C	Counter	C0～C79	C0～C79	C0～C199	C0～C79	C0～C199
K	Keep relay	K0～K19	K0～K19	K0～K39 K900～K909	K0～K19	K0～K39 K900～K909
D	Data table	D0～D1859	D0～D2999	D0～D7999	D0～D2999	D0～D7999
T	Variable timer	T0～T79	T0～T79	T0～T299	T0～T79	T0～T299
L	Label number		L1～L9999	L1～L9999	L1～L9999	L1～L9999
P	Subprogram number		P1～P512	P1～P2000	P1～P512	P1～P2000

4.2.3 Built–in Debug Function

Function	Contents
Display of sequence program	Dynamic display of ladder diagram
Diagnostic function	•Title data display • signal status (symbol can be displayed) • PMC alarm display • Signal trace • Memory contents display • Signal waveform display (PMC–RB3/RB4/ RC3/RC4 only) • Task status display (PMC–RC3/RC4 only) • I/O connection status display
Setting and displaying data	• Timer • Counter • Keep relay • Data table
Sequence program edit function	Ladder diagram editing (This feature is integrated in PMC–RC3/RC4. For RA1/RB3/RB4, a ladder edit module is required)

4.2.4 System Reserve Area of Internal Relay

(1) R9000 (Operation output register for the ADD, SUB, MULB, DIVB, and COMPB functional instructions)

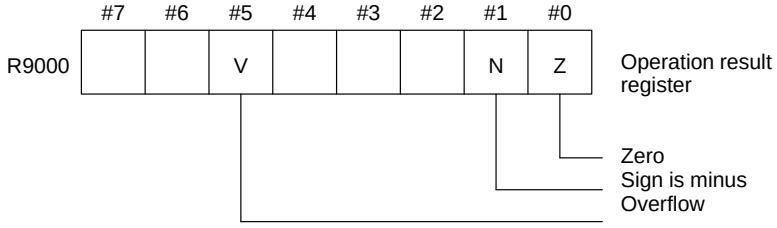

(2) R9000 (Error output for the EXIN, WINDR, WINDW, MMCWR, MMCWW, MMC3R, and MMC3W functional instructions)

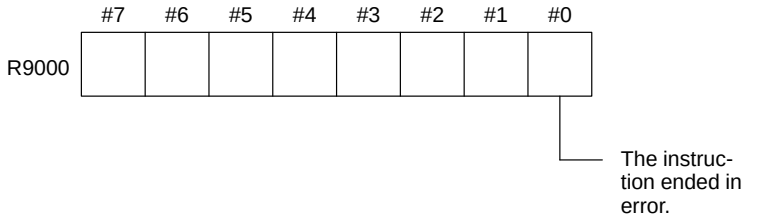

(3) R9002 to R9005 (Operation output registers for the DIVB functional instruction)
The data remaining after the DIVB functional instruction is executed in output.

(4) R9010 to R9027 (Interface area for the FNC9x functional instruction) (PMC–RC3/RC4 only)

The area is provided as an interface between the FNC9x functional instruction to be executed and a desired function.

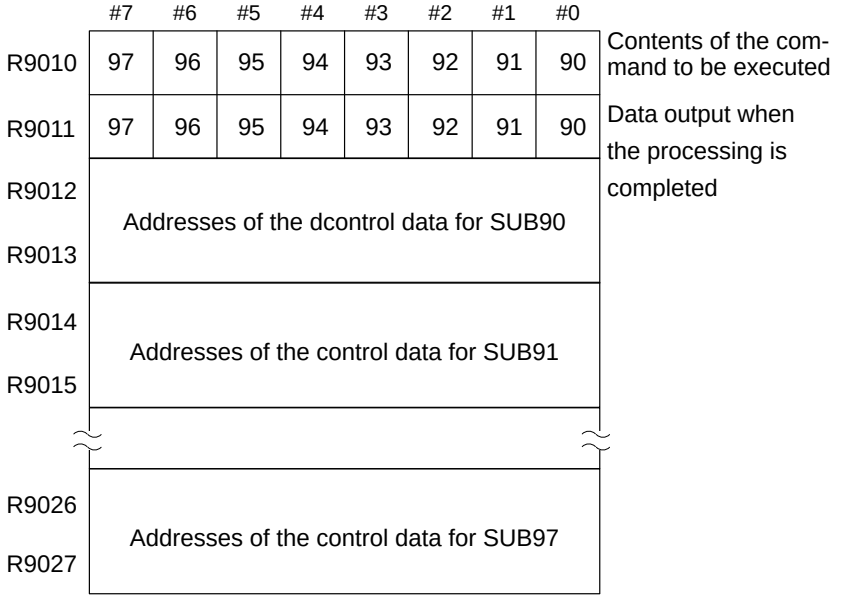

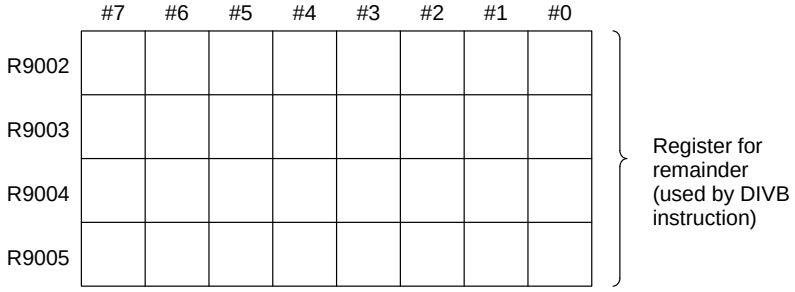

(5) R9100 to R9117 (Interface area for the FNC9x functional instruction) (PMC–RC3/RC4 only)

The area is provided as an interface between the FNC9x functional instruction to be executed and a desired function.

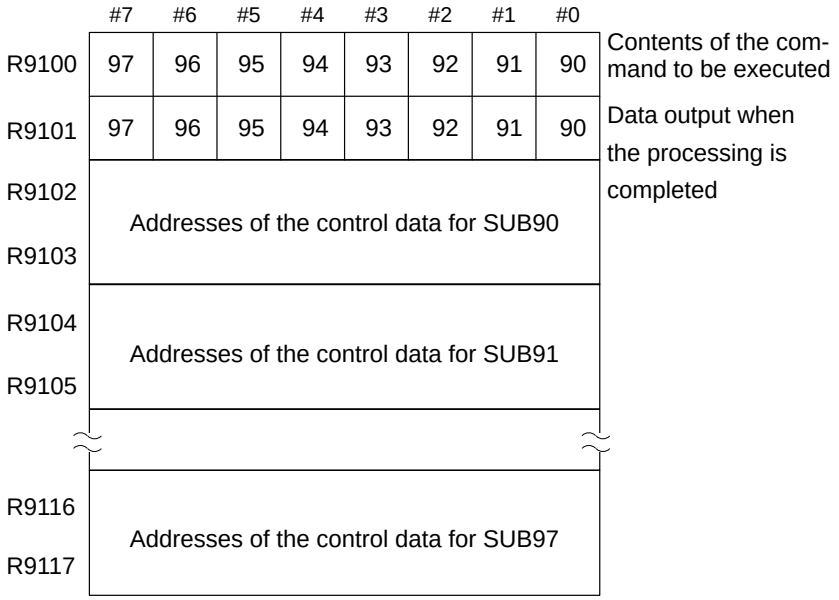

(6) R9091 (System timer)

4 signals can be used as system timer.

The specifications of every signal are as following.

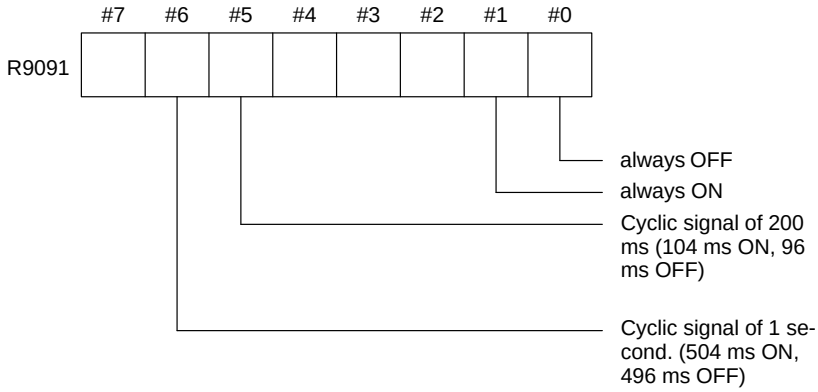

4.2.5 Execution Period of PMC

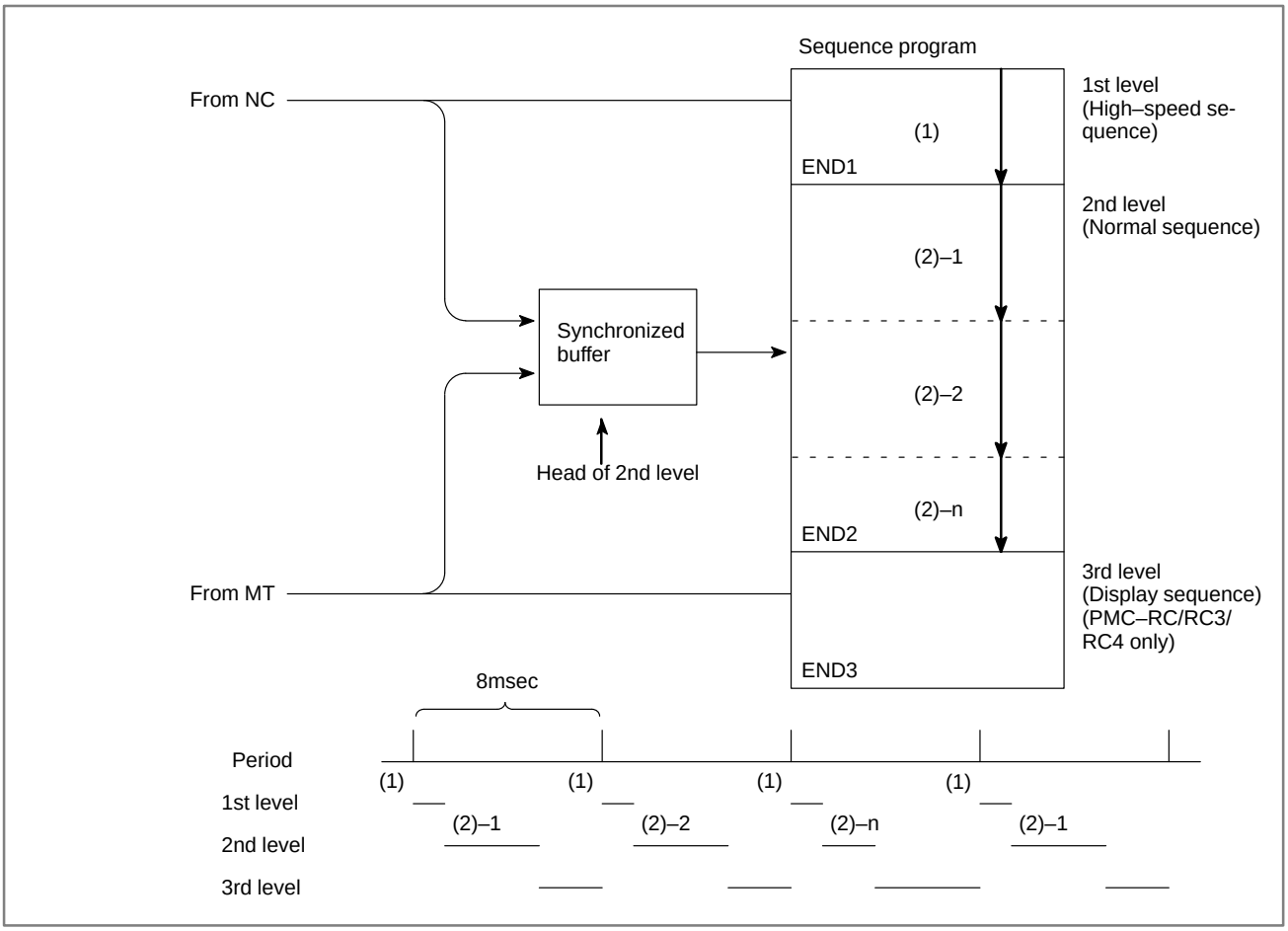

4.3 PMC SCREEN

4.3.1 Display Method

1. Press SYSTEM .
2. Press soft key **[PMC]**, then PMC screen is displayed and the following soft keys are displayed:

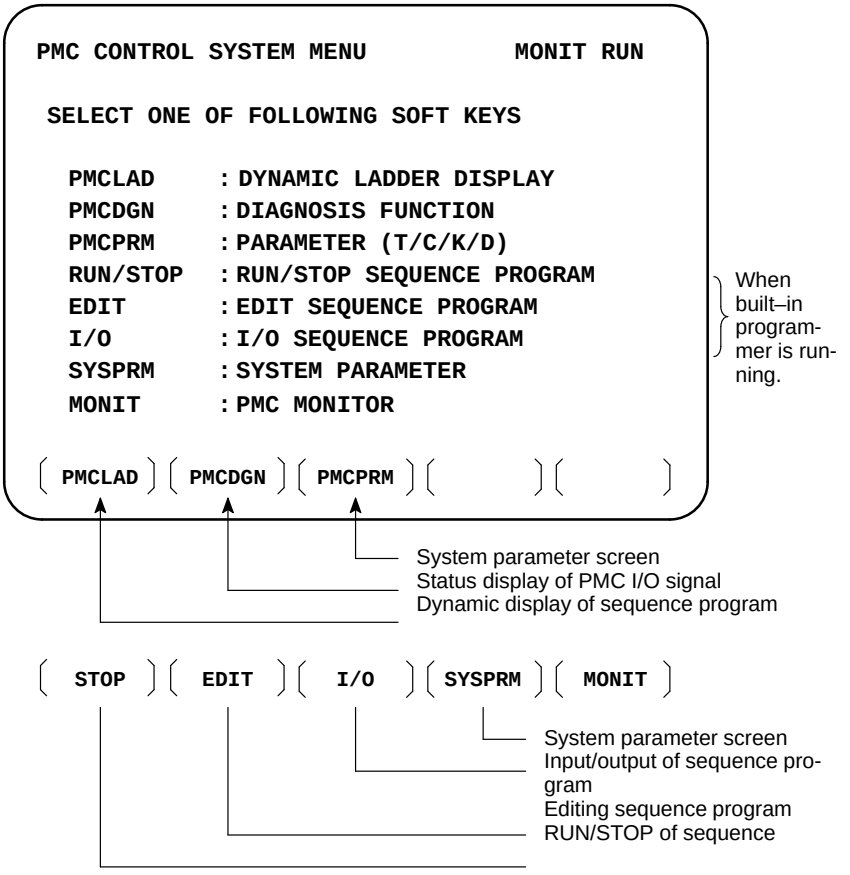

The no. of menus to be displayed changes depending on presence/absence of built–in programmer.

	PMC–RB3/RB4 (Without memory card for editing)	PMC–RB3/RB4 (With memory card for editing)	PMC–RC3/RC4
RUN/ STOP	○	○	○
EDIT	×	○	○
I/O	○	○	○
SYSPRM	×	○	○

x:Cannot be displayed nor used.

4.3.2 PMCLAD SCREEN

Press soft key **[PMCLAD]**, and a sequence program is displayed dynamically and operation monitoring can be confirmed :

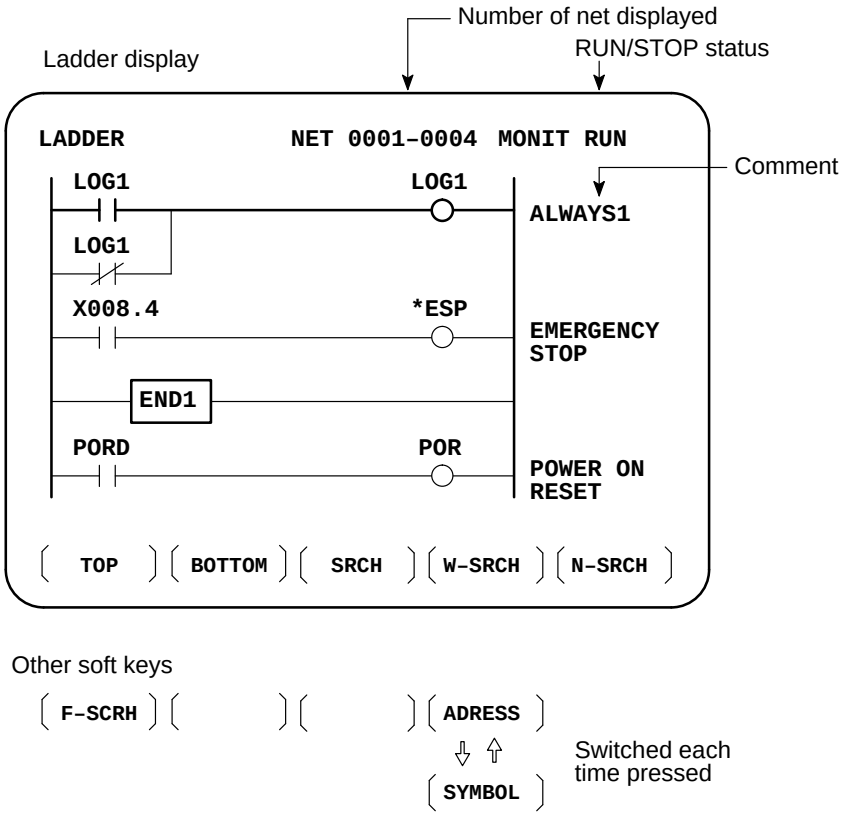

- **Contents displayed**

1. 1Green (Low brightness) displayContacts :open Relay :off
2. White (High brightness) display Contacts : closed Relay : on

- **Search method**

1. Use the cursor keys to change display positions.
2. **[TOP]**:Searches top of ladder.
3. **[BOTTOM]**:Search bottom of ladder.
4. Address.bit,**[SRCH]** or Signal name, **[SRCH]**
5. Address.bit,**[W–SRCH]** or Signal name ,**[W–SRCH]**
6. Net no.**[N–SRCH]**:Ladder is displayed from the specified net.
7. Functional instruction no. **[F–SRCH]** or Functional instruction name**[F–SRCH]**
8. **[ADRESS]**:Signal is displayed by address and bit no.
9. **[SYMBOL]**:Signal is displayed by signal name (symbol).
   (If symbol is not registered at program preparation time, the address of the signal is displayed).

[Remarks]

- The search function searches a signal in the forward direction and displays the ladder with the searched signal at its head. Because there may exist plural contacts, repeat the search operation to find plural locations, repeat the search operation to find plural locations with the specified signal.
- If a specified signal is not found up to the end of the program (ladder), execution returns to the head of a program and search continues.

● Dump display on ladder diagram

Ladder diagram and signal status dump can displayed together.
The dump is displayed over 2 lines at the last line of ladder diagram by pressing the **[DUMP]** soft key.

keys or **[SEARCH]** soft key is used for changing of PMC address.

The [DUMP] soft key has the follwing functions.

(1) [BYTE]: Byte type display (1 BYTE)
"G0000 00 14 00 00 01 00 00 00 00 00 00 00 00 00 00 00"
"G0016 00 00 00 00 00 00 00 00 00 00 00 00 00 00 00 00"

(2) [WORD]: Word type display (2 BYTE)
"G0000 1400 0000 0001 0000 0000 0000 0000 0000"
"G0016 0000 0000 0000 0000 0000 0000 0000 0000"

(3) [D.WORD]: Long word type display (4 BYTE)
"G0000 00001400 00000001 00000000 00000000"
"G0016 00000000 00000000 00000000 00000000"

● Parameter display on ladder diagram

The value of parameter of a functional instruction is displayed in the functional instruction of a ladder diagram.

The function of the soft key is as follows:

(1) [DPARA] : The value of parameter is displayed in functional instruction.

(2) [NDPARA] : The value of parameter is not displayed in functional instruction.

● Stop of ladder diagram display by trigger of signal (PMC–RB3/RB4/RC3/RC4)

PA1	PA3	RA1	RA2	RA3	RB	RB2	RB3	RC	RC3	NB
×	○	×	×	○	×	×	○	Δ	Δ	○

○ : Can be used
: Can not be used

Note) Δ : Can be used for the specific series of CNC
(Series 16: B005/11~, B105/08~, B305/04~, B009/03~)
(Series 18: BD03/12~, BE03/09~, BG23/03~, BG03/06~, BD09/02~, BE09/14~)

The ladder display can be stopped by manual operation or trigger of signal.
The former ladder diagram display renews signal status every moment. But by using this function, all the ladder diagram at the specified moment can be checked.
The stop conditions as a trigger are specified by rising or falling edge detection of the designated signal.

* Display of setting trigger
  The setting address, condition and counter are displayed at the title line.

“MODE:ON : X0000. 0 : 0 : 0001 ”

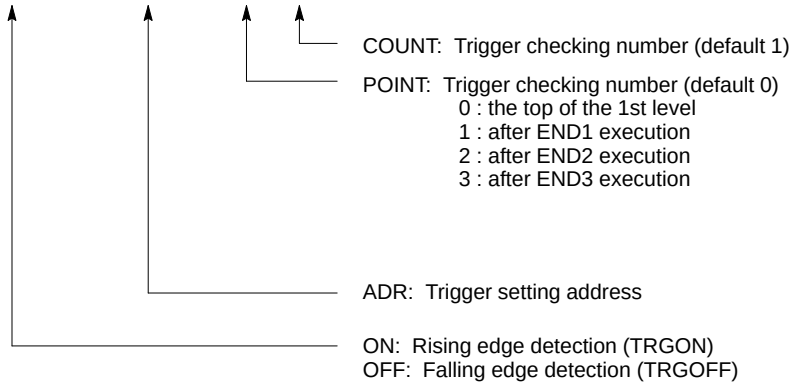

* Setting form adr ;p1 ;p2+[TRGON/TRGOFF]soft key

Notes
“;”=”EOB” adr (trigger address) ;p1 (trigger point) ;p2 (trigger checking number (1~65535))

* Because parameters are stored in the nonvolatile memory, they are not lost even if the power is turned off.
  When bit 2 of keep relay K18 is set to 1 after parameters for sampling are specified, the trigger function automatically starts when the power is turned on.
  For this operation, depress **[TRIGER]** soft key to bring the following menu.

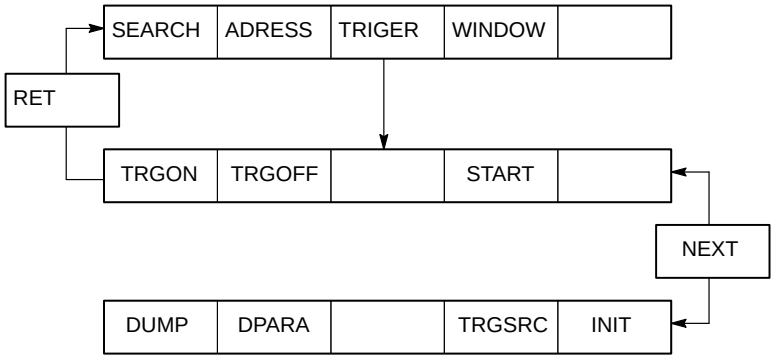

The function of the **[TRIGER]** soft key is explained below:

(1) [TRGON] : The trigger function is stopped when a specified address signal goes high (is turned ON).

(2) [TRGOFF] : The trigger function is stopped when a specified address signal goes low (is turned OFF).

(3) [START] : Pressing this key switches between trigger function execution and trigger function termination. While the trigger function is being executed, the ”TRG” indication blinks.

(4) [TRGSRC]: An instruction at which the trigger function has been stopped by a specified address signal is searched for and indicated by blinking.

(5) [INIT] : The trigger setting is initialized.

- **Divided display of ladder diagram**

This function is used for displaying the divided screen. It can display max. six division.
For this operation, depress **[WINDOW]** soft key to bring the following menu.

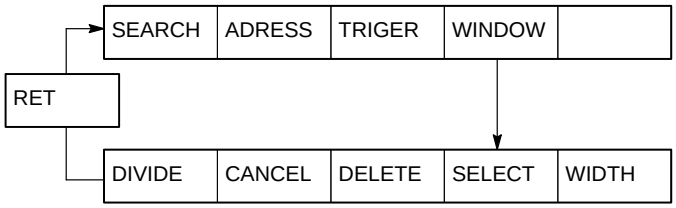

The function of the soft key **[WINDOW]** is as follows:

(1) [DIVIDE] : The screen will be divided.
The dividing display of ladder diagram can be displayed for the designated NET number.
(NET number+**[DIVIDE]**)

(2) [CANCEL] : The dividing display of ladder diagram display ends. (The screen returns to normal display.)

(3) [DELETE] : The screen division subject to operation is ended.

(4) [SELECT] : Change the screen subject to division operation. The screen in operation is displayed by ”purple” title line, another screen is displayed by “blue” title line.In monochrome CRT, the screen is displayed by changing brightness.

(5) [WIDTH] : Change the width of division by using **[EXPAND]** or **[SHRINK]** soft key.

(6) [EXPAND] : The divided screen is expanded.

(7) [SHRINK] : The divided screen is shrank.

- **ON–LINE EDIT (PMC–RB3/RB4/RC3/RC4)**

When bit 1 in the keep relay K17 is 1, this function is available and **[ONLEDT]** soft key is displayed.

When the ladder program is executing, a part of the ladder program can be changed.
- Change the type of contact (A contact, B contact)
- Change address of contact and coil.
- Change address parameter of functional instruction.

This function don’t change the size.
(Cannot be Addition, deletion and chanegable data size)
When bit 3 in the keep relay K18 is 1, this program is automatically transferred to backup RAM after on–line edit.
When bit 3 in the keep relay K18 is 0, transfer to backup RAM with COPY function of I/O screen. If power is off without this operation, edited data is lost.

4.3.3 PMCDGN SCREEN

Press soft key **[PMCDGN]** then PMC's diagnostic screen is displayed.

- **TITLE screen**

The title data registered when a ladder program is prepared is displayed.

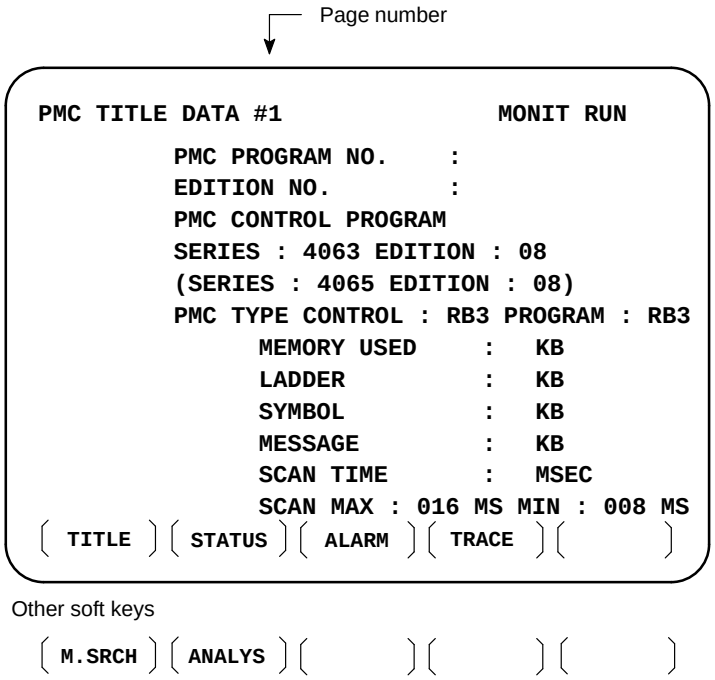

1st page
PMC PROGRAM NO. :
EDITION NO. :
Set when PMC is prepared

PMC CONTROL PROGRAM
SERIES : EDITION : –
Series and edition of PMC control software

MEMORY USED : KB
LADDER KB
SYMBOL KB
MESSAGE KB
SCAN TIME MSEC
Memory used and execution time is displayed.

2nd page
MACHINE TOOL BUILDER NAME :
MACHINE TOOL NAME :
CNC & PMC TYPE NAME :
PROGRAM DRAWING NO. :

3rd page
DATE OF DRAWING :
PROGRAM DESIGNED BY :
ROM WRITTEN BY :
REMARKS :

Set when PMC is prepared.

- **STATUS screen**

On/Off state of input/output signals and internal relay is displayed.

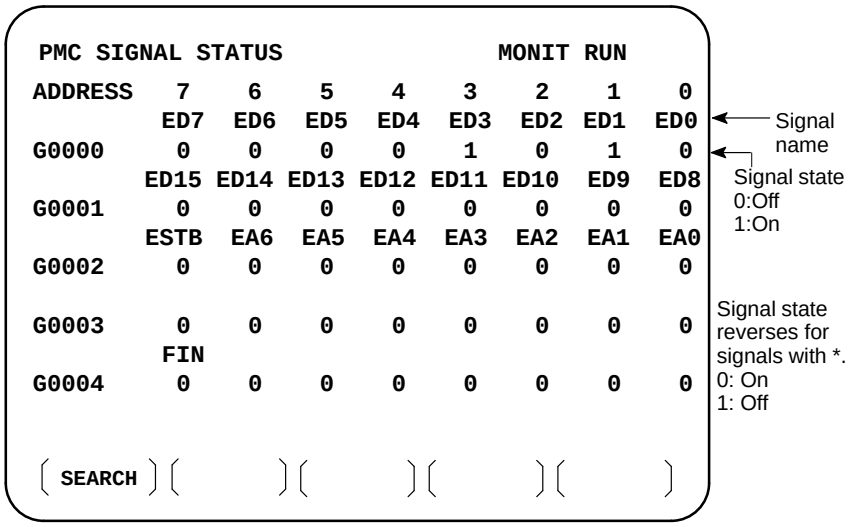

[Search Method]

- Page key :Forward and Backward by screen
- Cursor key :Forward and Backward by diagnostic number
- To search a specified address or signal name, input an address number or signal name and press **[SEARCH]**.

- **Alarm screen**

Displays an alarm generated in PMC.

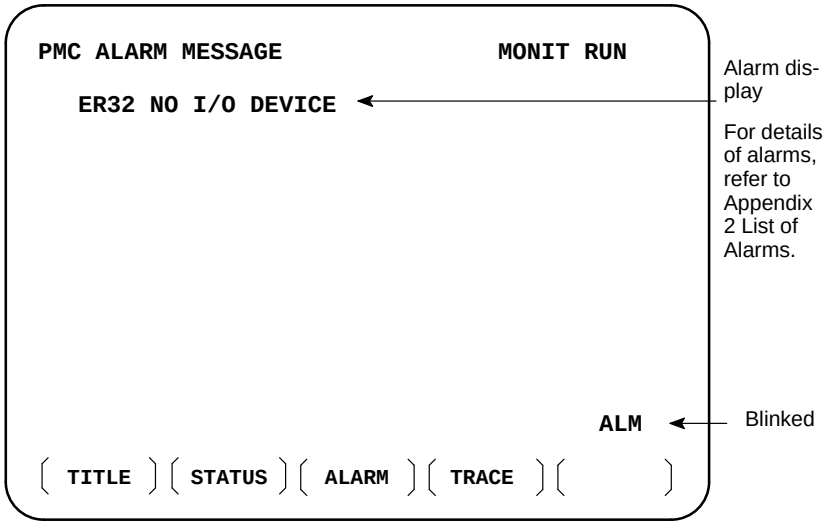

- **TRACE screen**

Every time a specified signal changes, the signal status is memorized in the trace memory. This function is useful for identifying intermittent troubles.

1 Trace parameter screen

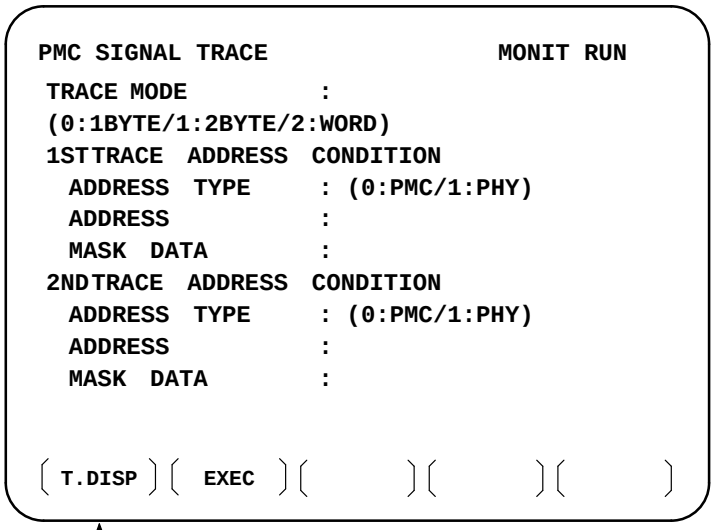

a. TRACE MODE: Select the trace mode
0=Records changes of 1–byte signals
1=Records changes of independent 2–byte signals
2=Records changes of consecutive 2–byte signals

b. ADDRESS TYPE:
0=PMC address is used for tracing address.
1=Physical address is used for tracing address.
(Mainly used for C–language program)

c. ADDRESS:Set a tracing address.

d. MASK DATA: The bits to be traced are specified by a hexadecimal number (2 digits).
For example, to trace the signals at bit 7,6,5 and 0, set E1 (hexadecimal) to MASK DATA.

	#7	#6	#5	#4	#3	#2	#1	#0
E1%	1	1	1	0	0	0	0	1

However, even if bit 4,3,2 and 1 changes, tracing (memory registration) cannot be done but signal status is memorized when a tracing is executed.
[Correspondence of binary and hexadecimal number]
$0000_2 : 0_{16}$ $0001_2 : 1_{16}$ $0010_2 : 2_{16}$ $0011_2 : 3_{16}$
$0100_2 : 4_{16}$ $0101_2 : 5_{16}$ $0110_2 : 6_{16}$ $0111_2 : 7_{16}$
$1000_2 : 8_{16}$ $1001_2 : 9_{16}$ $1010_2 : A_{16}$ $1011_2 : B_{16}$
$1100_2 : C_{16}$ $1101_2 : D_{16}$ $1110_2 : E_{16}$ $1111_2 : F_{16}$

2 Trace memory contents display screen

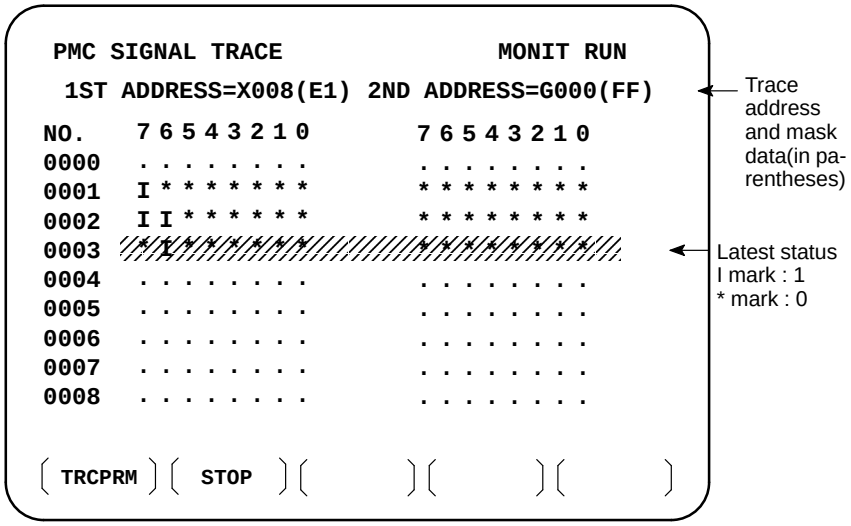

a. Soft key **[TRCPRM]**: Return to the trace parameter setting screen (screen of previous page)

b. Soft key **[EXEC]**: Starts tracing.
Trace memory is cleared and each time a specified signal changes, its status is recorded. Trace memory is 256 bytes and if tracing is executed 128 times by 2–byte tracing, tracing is executed again from the head of memory.

c. Soft key **[STOP]**: Ends the tracing.

*The tracing parameters are held even if the power is turned off.

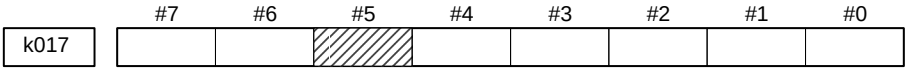

#5 0 : Tracing starts by **[EXEC]**.

1 : Tracing starts automatically after power on

4.3.4 Memory display (M.SRCH)

- **Display of Screen and Operation**

1) Pressing the **[M.SRCH]** soft key changes the screen to that shown in Fig. 3.5. The displayed soft keys also change.
2) Enter a physical address in hexadecimal from which the contents of the memory are to be displayed. Then pressing the **[SEARCH]** key displays 256 byte of stored data starting from the specified address.

   Example) Enter 100000, then pressing the **[SEARCH]** keydisplays the contents of the memory starting from 100000H.

3) An address can be changed using the PAGE ↓ or PAGE ↑ key.
4) Pressing either the **[BYTE]**, **[WORD]**, or **[D.WORD]** soft key displays data of the corresponding type.
   If an address at which the memory is not used is specified, a system error occurs.

- **Function of store memory**

To store data in memory, set bit 4 of keep relay K17 to 1, move the cursor to a position at which the address of the data to be changed in RAM is displayed, and enter data in units of data type in hexadecimal.

Example) Entering 0F41, then pressing the INPUT key stores 0F41 at the address specified by the cursor

```
PMC CONTENTS OF MEMORY                                          MONIT RUN

100000  0000 0000 0000 0000 0000 0000 0000 0000  ................
100010  4142 4344 4546 4748 494A 4B4C 4D4E 4F50  ABCDEFGHIJKLMNOP
100020  2020 2020 2020 2020 2020 2020 2020 2020
100030  5152 5354 5556 5758 595A 2020 2020 2020  QRSTUVWXYZ

100040  0000 0000 0000 0000 0000 0000 0000 0000  ................
100050  0000 0000 0000 0000 0000 0000 0000 0000  ................
100060  0000 0000 0000 0000 0000 0000 0000 0000  ................
100070  0000 0000 0000 0000 0000 0000 0000 0000  ................

100080  4641 4E55 4320 434F 2E2C 5444 0000 0000  FANUC CO.LTD....
100090  0000 0000 0000 0000 0000 0000 0000 0000  ................
1000A0  0000 0000 0000 0000 0000 0000 0000 0000  ................
1000B0  0000 0000 0000 0000 0000 0000 0000 0000  ................

1000C0  0000 0000 0000 0000 0000 0000 0000 0000  ................
1000D0  0000 0000 0000 0000 0000 0000 0000 0000  ................
1000E0  0000 0000 0000 0000 0000 0000 0000 0000  ................
1000F0  0000 0000 0000 0000 0000 0000 0000 0000  ................

 [ SEARCH ][ INPUT ][        ][        ][        ]
```

- **ANALYS screen (PMC–RB3/RB4/RC3/RC4) (Ladder editing card is required for PMC–RB3/ RB4)**

Change of signals is displayed as the same display as that on the oscilloscope.

1 Parameter setting screen (1st page)

```
   PMC SIGNAL ANALYSIS(PARAM)   MONIT RUN

SAMPLING TIME      :       10 (1–10 SEC)        (a)

TRIGGER ADDRESS    : G0007.2                    (b)

CONDITION          :        0                   (c)
(0: START 1: TRIGGER–ON 2: TRIGGER–OFF)

TRIGGER MODE       :        0                   (d)
(0: AFTER 1: ABOUT 2: BEFORE 3: ONLY)

 [ SCOPE ][ DELETE ][ INIT  ][ADDRESS][       ]
```

Select each item by cursor key

(a) Set a sampling time.

(b) Specifies an address from which recording of signals is started.

(c) Set a condition under which recording is initiated.

0 : Started by soft key **[START]**
1 : Started by rise of a trigger signal after you press the soft key **[START]**
2 : Started by fall of a trigger signal after you press the soft key **[START]**

(d) Set a trigger mode

0 : Record signal status after the trigger condition is satisfied
1 : Record signal status before and after the trigger condition is satisfied.
2 : Record signal status before the trigger condition is satisfied.
3 : Record signal status when the trigger condition is satisfied. (Display is same as trace memory).

2 Parameter setting screen (2nd page)

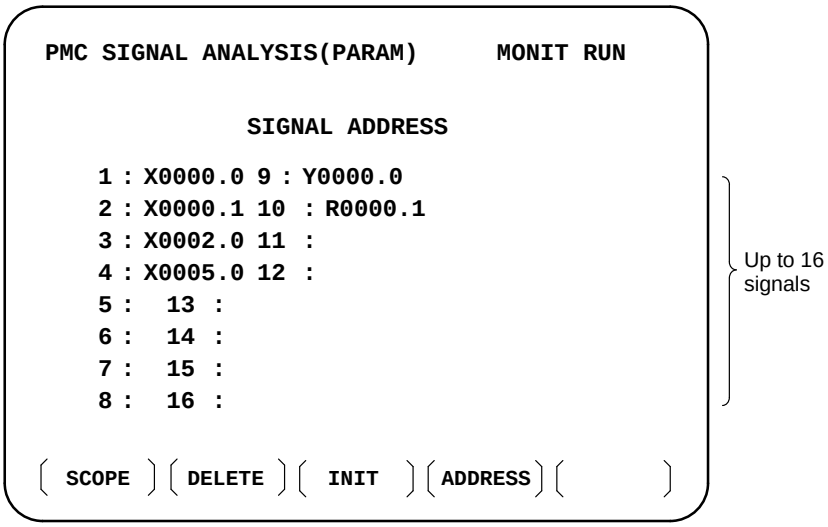

a. Soft key **[SCOPE]**:Select signal waveform display screen
b. Soft key **[DELETE]** :Delete data on the cursor position
c. Soft key **[INIT]** :Initialize parameters of signal waveform display
d. Soft key **[ADDRESS]** or **[SYMBOL]** :Switch addresses and symbols for display

3 SCOPE screen

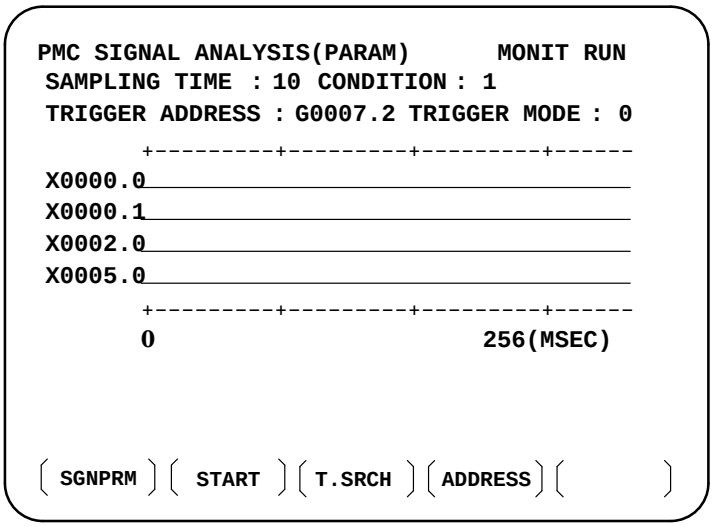

The above screen is for a system with graphic display.
I and * are used for display if graphic function is not equipped.

a. Soft key **[SGNPRM]** : Returns to parameter screen.

b. Soft key **[START]** or **[STOP]** :Start or stop the record.
(If TRIGGER MODE=3, signal is displayed when you press STOP key.)

c. Soft key **[T.SRCH]** :Displayed for a specified time.

d. Soft key **[ADDRESS]** or **[SYMBOL]** :Switch addresses and symbols for display

e. Soft key **[EXCHG]** : Change order of signals displayed.
·Press soft key **[EXCHG]**
·Move the cursor to a signal to be changed.
·Press soft key **[SELECT]**.
·Move the cursor to the destination.
·Press **[TO]** and **[EXEC]**, then the signal changes its order.

f. Soft key **[SCALE]**: Changes time scale for graphic display. Scale changes from 256 to 512, and to 1024 msec every time you press the key.

g. Cursor key ⬅ ➡ : Scrolls time axis forward and backward

4.3.5 PMCRAM Screen

- **Inputting PMC parameters from the MDI**

1 Set to MDI mode or emergency stop state.

2 Set PARAMETER WRITE (on setting screen) to 1 or set the program protect signal (KEY4) to 1.

	PWE	KEY4	
Timer	○	–	
counter	○	○	Either one
Keep relay	○	–	
Data table	○	○	Either one

3 Press a soft key and select a required screen.
[TIMER] :Timer screen
[COUNTR] :Counter screen
[KEEPRL] :Keep relay screen
[DATA] :Data table screen

4 Press cursor key and move the cursor to a desired number.

5 Input a numeric key and press INPUT key and data is input.

6 After the data is input, set PARAMETER WRITE or KEY4 on setting screen to 0.

- **TIMER screen**

This screen is used for setting timer time of the functional instruction (SUB 3).

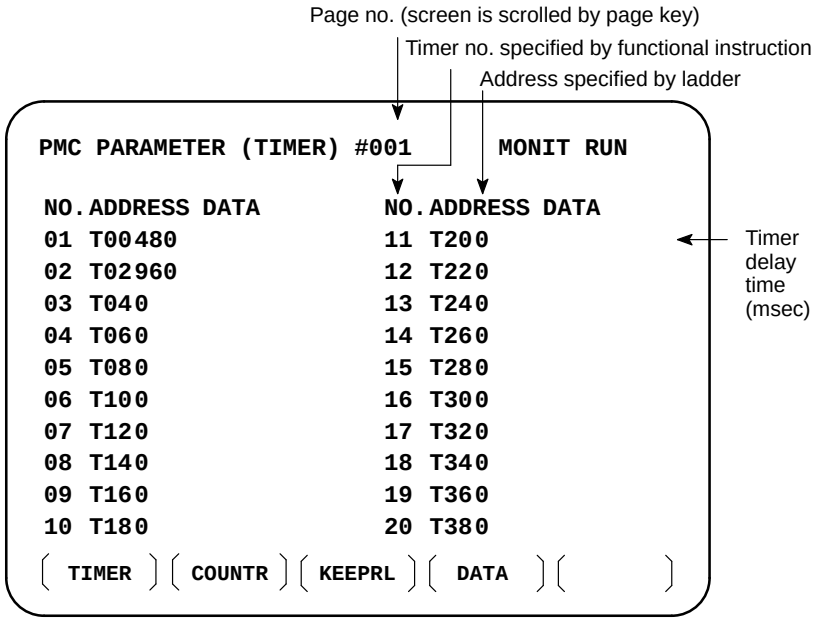

Timer set time : Timer no. 1–8 is max. 1572.8 sec and its accuracy is 48ms.
Timer no. 9 is max. 262.1 sec and its accuracy is 8ms.

- **COUNTER screen**

This screen sets and displays max. value of counter and current value of the counter instruction (SUB 4).

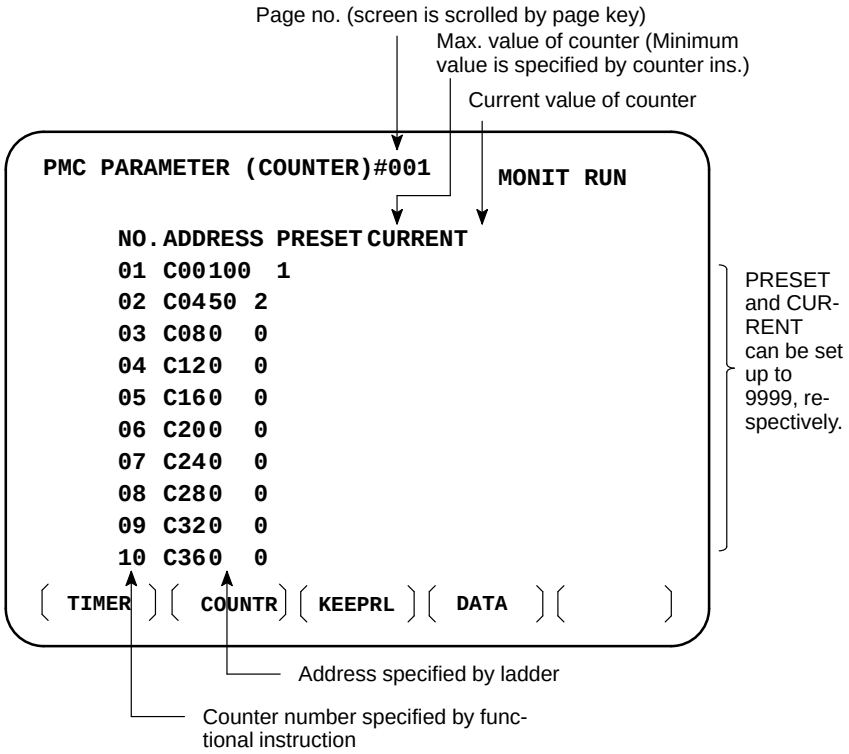

- **KEEP RELAY screen**

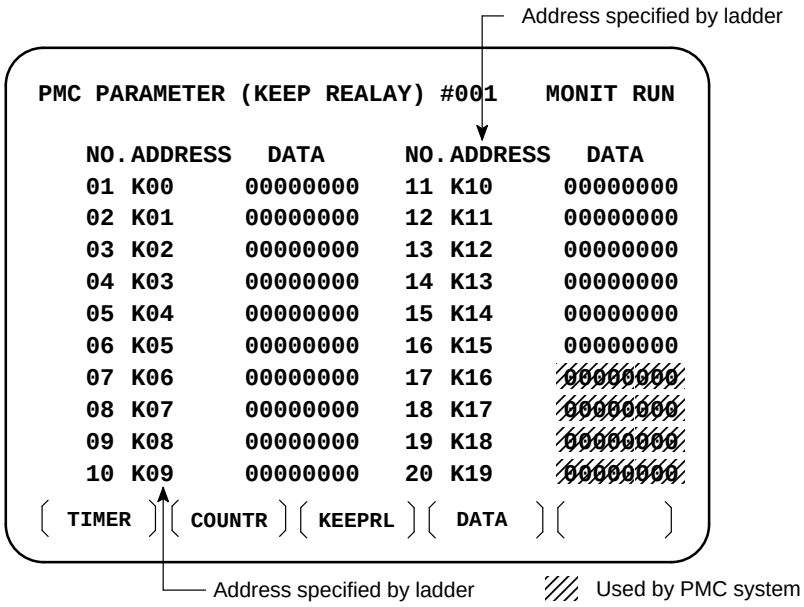

1 Nonvolatile memory control

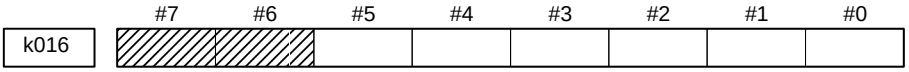

#7(MWRTF2): For checking the writing status in nonvolatile memory
#6(MWRTF1): Writing status in nonvolatile memory

2 PMC system parameter
The following keep relays are used by the system, therefore they cannot be used in the sequence program.

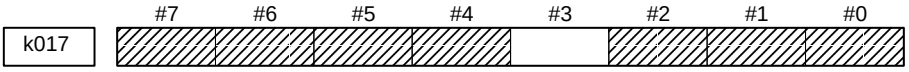

#7DTBLDSP 0 : The PMC parameter data table control screen is displayed.

1 : The PMC parameter data table control screen is not displayed.

#6ANASTAT 0 : Pressing **[EXEC]** key initiates sampling by signal waveform display function.

1 : Turning power to on initiates sampling by signal waveform display function.

#5TRCSTAT 0 : Signal tracing starts by soft key **[EXEC]** in signal trace function.

1 : Signal tracing starts automatically by power on in signal trace function.

#4MEMINP 0 : Data input cannot be done in memory contents display function.

1 : Data input can be done in memory contents display function.

#2AUTORUN 0 : A sequence program is executed automatically after the power is turned on.

1 : A sequence program is executed by sequence program soft key.

#1PRGRAM 0 : Built–in programmer is not used.

1 : Built–in programmer is used.

#0LADMASK 0 : Dynamic display of ladder is executed.

1 : Dynamic display of ladder is not executed.

#7IGNDINT 0 : When the screen is switched to the PCMMDI screen, the CRT is initialized.

1 : When the screen is switched to the PCMMDI screen, the CRT is not initialized.
*It is effective for PMC–RC3/RC4

#5CHKPRTY 0 : The parity check is performed for the system ROM and program ROM/RAM.

1 : The parity check is not performed for the system ROM and program ROM/RAM.

#4CALCPRTY 0 : The built–in programmer function performs RAM parity calculation.

1 : The built–in programmer function does not perform RAM parity calculation.

#3TRNSRAM 0 : A ladder program is not automatically sent to the backup RAM after on–line editing is completed.

1 : A ladder program is automatically sent to the backup RAM after on–line editing is completed.

#2TRGSTAT 0 : The trigger stop function does not automatically start when the power is turned on.

1 : The trigger stop function automatically starts when the power is turned on.

#1DBGSTAT 0: In the C language debug function, the automatic break processing does not start when the power is turned on.

1 : In the C language debug function, the automatic break processing starts when the power is turned on.
*This flag is effective for the PMC–RC3/RC4.

#0IGNKEY 0 : Function keys are enabled when a user program displays the user screen.

1 : Function keys are disabled when a user program displays the user screen.

*This flag is effective for the PMC–RC3/RC4.

When this bit is set to 1 of the user screen, the screen cannot be switch to the NC screen using function keys. A program which always sets this bit to 0 or which changes the screen to the NC screen is required.

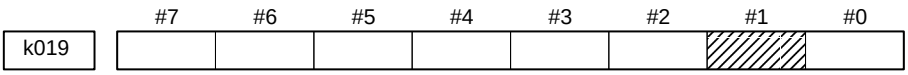

#1C–REJECT 0 : A C–language program is activated.

1 : A C–language program is forcibly activated.
*The flag is effective for the PMC–RC3/RC4.

These bits are status of not used for PMC management software are used by system. Do not change the values.
Usually all the bits are 0.

- **DATA TABLE screen**

1 Data table setting screen

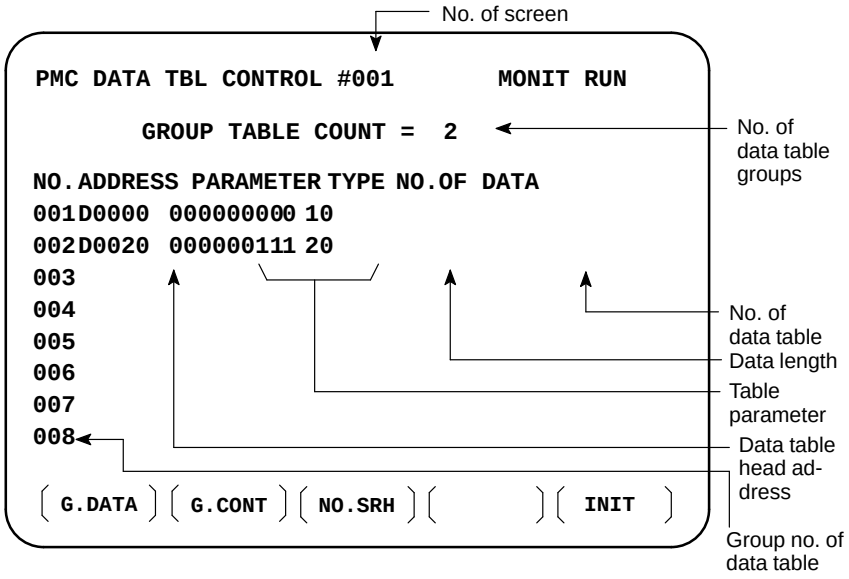

a. Soft key **[G.DATA]** : Select data display screen of data table. (Next screen)

b. NO. OF GROUPS **[G.CONT]**: Set the no. of groups of data table.

c. Group No. **[NO.SRH]**: Move the cursor to a specified group.

d. Soft key **[INIT]**: Initializes the setting of data table.
No. of groups is 1, ADDRESS is D0000, PARAMETER is 0000000, TYPE is 0, NO. OF DATA is 1860.

This operation is done usually when a sequence program is prepared. When PMC parameters are set, internal parameters are not affected.

PARAMETER

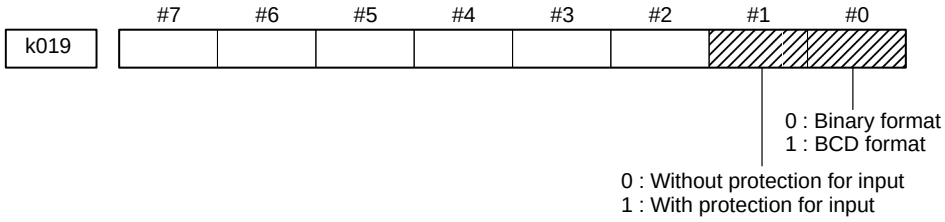

TYPE

0 : 1–byte length 1 : 2–byte length 2 : 4–byte length

e. Using the page key, next screen/previous screen can be selected.

2 Data display screen

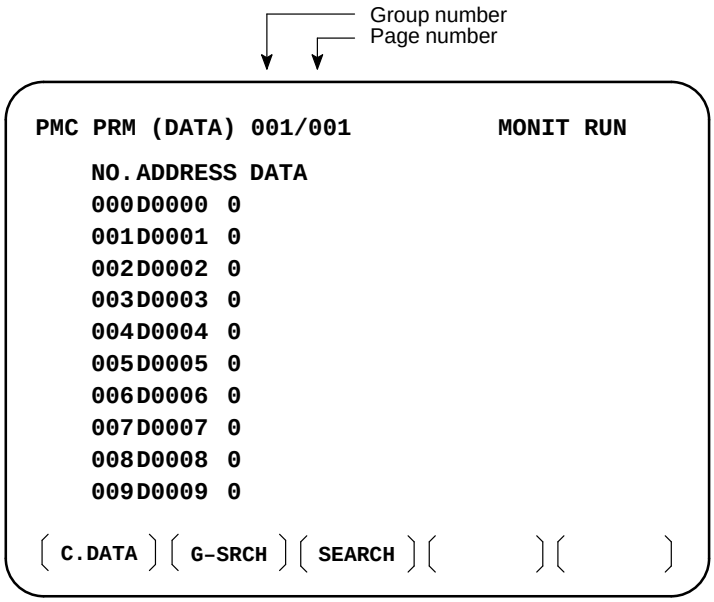

a. Soft key **[C.DATA]** :Returns to the data table setting screen. (Previous screen)

b. Group No. **[G–SRCH]** : Head of the specified group is selected.

c. Address **[SEARCH]**: Searches an address in a group currently selected.

4.4 LIST OF SIGNALS BY EACH MODE

- **Automatic operation**

MODE		INPUT/OUTPUT SIGNAL	FEED RATE, ETC
AUTOMATIC OPERATION	EDIT	[PMC ⇒ CNC] KEY3(Program protect key)	
	MEM MDI RMT	[PMC ⇒ CNC) ST (Cycle start) *SP (Feed hold) SBK (Single block) DRN (Dry run) BDT1~9 (Block delete) MIα (Mirror image) STLK (Start lock:16T/18T) CDZ (Chamfering:16T/18T) SMZ (In–position check:16T/18T) PN1~8 (External program no. search) MINP (External program input) DNCI (DNC input mode) HSα1A~D (Handle interrupt axis select) AFL (Auxiliary function neglect) FIN, MFIN2, MFIN3 (Auxiliary function complete) MFIN, SFIN, TFIN, TFIN (High speed M/S/T function complete) GR1, 2 (Gear input 16T/ 18T) *SSTP (Spindle stop) SAR (Spindle speed arrival) SOR (Spindle orientation)	[PMC ⇒ CNC] *FV0~7 (Feed rate override) *AFV0~7 (2nd feed rate override) OVC (Override cancel) ROV1,ROV2, HROV, *HROV0~6 (Rapid traverse override) SOV0~7 (Spindle speed override)
		[CNC ⇒ PMC] STL (Cycle start LED) SPL (Feed hold LED) MF, M00~M31 MF2, M200~M215 } (Miscellaneous function) MF3, M300~M315 SF, S00~S31 (Spindle speed function) TF, T00~T31 (Tool function) BF, B00~B31 (2nd miscellaneous func.) DEN (Distribution end) OP (automatic operating) GR1O~GR3O(Gear selection:16M/18M)	

- **Manual operation**

MODE			INPUT/OUTPUT SIGNAL	FEED RATE, ETC
MANUAL OPERATION	Handle/ incremental		[PMC ⇒ CNC] HSnA~D (Axis selection) n:1~3(No. of MPGs)	[PMC ⇒ CNC] MP1, MP2 (Multiplier)
	JOG		+α, –α (Jog feed) [PMC ⇒ CNC] RT (Rapid traverse)	[PMC ⇒ CNC] *JV0~15 (Manual feedrate override) +α, –α (Manual feed move command) ROV1, ROV2 HROV *HROV0~6 (Rapid traverse override)
		ZRN	[PMC ⇒ CNC] ZRN(Reference position return mode) [MT ⇒ CNC] *DECα (Reference position deceleration)	
			[CNC ⇒ PMC] ZPα ZP2α, ZP3α, ZP4α (Reference position return completion)	

- **Others**

Others	[PMC ⇒ CNC] MD1~4 (Mode selection) *ESP (Emergency stop) KEY1~4 (Memory protection key) MLK,MLKα (All axes/ each axis machine lock) *IT,*ITα (All axes/ each axis machine lock) *±MITα (interlock per axis and direction:M series) STLK (Start lock:T series) *ABSM (Manual absolute) SVFα (Servo off) *FLWP (Follow up) ERS (External reset) RRW (Reset & Rewind) EXLM (Stored stroke limit external switching) ±LMα, RLSOT (Software limit external setting M series) *±Lα (Overtravel limit) *±EDα (External deceleration of each axis)
	[CMC ⇒ PMC] MA (NC ready) SA (Servo ready) AL (NC alarm) RST (Resetting) BAL (Battery alarm) INPα (In–position) MVα (Axis moving) TAP (Tapping)

4.5 SIGNAL AND SYMBOL CORRESPONDENCE TABLE

	SYMBOL	PMC address	Signal names
A	*ABSM	G006.2	Manual Absolute Signal
	AFL	G005.6	Auxiliary Function Lock Signal
	*AFV0~7	G013.0~7	2nd Feedrate Override Signal
	AL	F001.0	Alarm Signal
	ALMA, B	F045.0, F049.0	Spindle Alarm Signal
	AR0~15	F040.0~7. F041.0~7	Actual Spindle Speed Signal
	ARSTA, B	G071.0. G075.0	Spindle Alarm Reset Signal
B	BAL	F001.2	Battery Alarm Signal
	BDT1~9	F044.0, F045.0~7	Optional Block Skip Signal
	BF	F007.7	B Function Strobe Signal
	BCLP	F061.1	B Axis Clamp Signal
	BUCLP	F061.0	B Axis Unclamp Signal
	*BECLP	G038.7	B Axis Clamp Completion Signal
	*BEUCL	G038.6	B Axis Unlamp Completion Signal
	B00~B31	F030~033	B Function Binary Code Signal
	BFIN	G005.7	B Function Completion Signal
	BGEACT	F053.4	Background Editing Signal
C	CDZ	G053.7	Chamfering Signal
	CHPA, B	F046.0 F050.0	Power Cable Switching Signal
	CFINA, B	F046.1 F050.1	Switch Completion Signal
	CON	G027.7	Cs Axis Contouring Control Signal
	CSS	F002.2	Constant Surface Speed Control Signal
	CTHαA, B	G070.2, 3, G074.2, 3	Clutch/Gear Selection Signal

	SYMBOL	PMC address	Signal names
D	*DEC1~8	X009.0~7	Reference Position Return Deceleration Signal
	DEN	F001.3	Distribution End Signal
	DM00	F009.7	Decoded M00 Signal
	DM01	F009.6	Decoded M01 Signal
	DM02	F009.5	Decoded M02 Signal
	DM30	F009.4	Decoded M30 Signal
	DNCI	F043.5	Operation by I/O device Mode
	DRN	G046.7	Dry Run Signal
	DTCH1~8	G124.0~7	Controlled Axis Detach Signal
E	*ESP	X008.4, G008.4	Emergency Stop Signal
	ERS	G008.6	External Reset Signal
	ENB	F001.4	Spindle Enable Signal
	ENB2, 3	F038.2, 3	2nd/3rd Spindle Enable Signal
	EF	F008.0	External Operation Function Signal
	EFIN	G005.1	External Operation Completion Signal
	*±ED1~8	G118.0~7 G120.0~7	External Deceleration Signal
	ESTB	G002.7	External Data Input Strobe Signal
	EA0~6	G002.0~6	External Data Input Address Signal
	ED0~15	G000.0~7 G001.0~7	External Data Input Data Signal
	EREND	F060.0	Read End Signal
	ESEND	F060.1	Search End Signal
	ENBKY	F053.7	Key Enable Signal
	EXSTP	G058.2	External Read/Punch Stop Signal
	EXWT	G058.3	External Punch Start Signal
	EXRD	G058.1	External Read Start Signal
	EXLM	G007.6	Stored Stroke Limit 1/2 Select Signal
F	FIN	G004.3	M, S, T, B Function Finish (Completion) Signal
	*FLWP	G007.5	Follow–up Signal
	F1D	G016.7	F 1 digit Selection Signal
	FSCSL	F044.1	Cs Axis Contouring Control Mode Select Completion Signal
	*FV0~7	G012.0~7	Feedrate Override Signal

	SYMBOL	PMC address	Signal names
G	GRα 0	F034.0~2	Gear Selection Output Signal
	GRα	G028.1, 2 G029.0~2	Gear Selection Input Signal
	GOQSM	G039.7	Offset Write mode Input Signal
H	HA, HB		Output Signal from MPG
	HSnA~D	G018.0~7 G019.0~3	Manual Handle Feed Axis Select Signal
	HSαIA~D	G041.0~7 G042.0~3	Handle Interrupt Axis Select Signal
	HROV	G096.7	Rapid Traverse Override Select Signal
	*HROV0~6	G096.0~6	Rapid Traverse Override Signal
I	*IT	G008.0	All Axis Interlock Signal
	*IT1~8	G130.0~7	Each Axis Interlock Signal
	INHKY	F053.0	Inhibit Key Input Signal
	INCH	F002.0	Inch Input Signal
	INP1~8	F104.0~7	In–position Signal
J	*JV0~15	G010~011	JOG Feedrate Override Signal
	±Jl~J8	G100.0~7 G102.0~7	Feed Axis Direction Signal
K	KEY1~4	G046.3~6	Memory Protection Key Signal
L	*±L1~8	G114.0~7 G116.0~7	Overtravel Limit Signal
	±LM1~8	G110.0~7 G112.0~7	Software Limit External Set Signal
M	MA	F001.7	NC Ready Signal
	MABSM	F004.2	Manual Absolute Confirmation Signal
	MAFL	F004.4	Auxiliary Function Lock Confirmation Signal
	MBDT1~9	F004.0 F005.0~7	Optional Block Skip Confirmation Signal
	MCFNA, B	G071.3 G075.3	Power Cable Condition Verification Signal
	MD1~4	G043.0~2	Mode Selection Signal
	MDRN	F002.7	Dry Run Confirmation Signal
	MD10~40	F073.0~2	Software Operation Panel Mode Output Signal
	MDTCH1~8	F110.0~7	Controlled Axis Detach Confirming Signal
	MEDT	F003.6	EDIT Mode Confirmation Signal

	SYMBOL	PMC address	Signal names
M	MINP	G058.0	External Data Input Start Signal
	±MIT1~2 (Tseries)	X004.2~5	Tool Compensation Measured Value Direct Input B Signal
	±MIT1~4 (Mseries)	G132.0~3 G134.0~3	Interlock Signal for Each axis and Direction Signal
	MI1~8	G106.0~7	Mirror Image Signal
	MF	F007.0	M Function Strobe Signal
	MF2	F008.4	2nd M Function Strobe Signal
	MF3	F008.5	3rd M Function Strobe Signal
	MFIN	G005.0	M Function Finish (Completion) Signal
	M00~M31	F010~13	M Function Binary Code Signal
	M200~215	F014~015	2nd M Function Binary Code Signal
	M300~315	F016~017	3rd M Function Binary Code Signal
	MLK	G044.1	Machine Lock Signal
	MLK1~8	G108.0~7	Each Axis Machine Lock Signal
	MH	F003.1	H Mode Confirmation Signal
	MINC	F003.0	INC Mode Confirmation Signal
	MJ	F003.2	J Mode Confirmation Signal
	MMDI	F003.3	MDI Mode Confirmation Signal
	MMEM	F003.5	MEM Mode Confirmation Signal
	MMLK	F004.1	Machine Lock Confirmation Signal
	MMI1~8	F108.0~7	Mirror Image Confirmation Signal
	MP1, MP2	G019.4, 5	Incremental Feed Multiply Signal
	MRDYA, B	G070.7 G074.7	Machine Ready Signal
	MRMT	F003.4	RMT Mode Confirmation Signal
	MREF	F004.6	REF Mode Confirmation Signal
	MSBK	F004.3	Single Block Confirmation Signal
	MTCHIN	F003.7	TCHIN Mode Confirmation Signal
	MV1~8	F102.0~7	Axis Moving Signal
	MVD1~8	F106.0~7	Axis Moving Direction Signal
O	OFN0~5	G039.0~5	Offset Number Input for Tool Compensation Measured Signal
	OP	F000.7	Automatic Operation Signal

	SYMBOL	PMC address	Signal names
O	ORCMA, B	G070.6 G074.6	Spindle Orientation Command Signal
	OUT0~7	F072.0~7	Software Operator's Panel General Purpose Switch Signal
	OVC	G006.4	Override Cancel Signal
P	PA, PB		Power Unit Ready Signal
	PC2SLC	G028.7	Position Coder 1/2 Select Signal
	PN1~8	G009.0~3	Workpiece Number Search Signal
	PRC	G040.6	Position Recode Signal
	PRGDPL	F053.1	Program Screen Display Signal
	PRTSF	F062.7	Required Machined Parts Reach Signal
	PSW1~10	F070.0~ F071.2	Position Switch Signal
R	RCHA, B	G071.7 G075.7	Power Cable Condition Verification Signal
	RCHPA, B	F046.2 F050.2	Output Switching Request Signal
	RCFNA, B	F046.3 F050.3	Spindle Switch Completion Signal
	RGTAP	G061.0	Rigid Tapping Signal
	RGSPM	F065.1	Spindle Rotate CCW Signal in Rigid Tapping Mode
	RGSPP	F065.0	Spindle Rotate CW Signal in Rigid Tapping Mode
	RLSOT	G007.7	Softeware Limit Release Signal
	ROV1, 2	G014.0, 1	Rapid Traverse Override Signal
	R01I~12I	G032.0	Spindle Speed 12–bit Binary Code Input Signal
	R01O~120	G036.0~G037.3	Spindle Speed 12–bit Binary Code Output Signal
	RPD0	F002.1	Rapid Traverse Operation Mode Signal
	RPBSY	F053.2	Read/Punch Busy Signal
	RPALM	F053.3	Read/Punch Alarm Signal
	RRW	G008.6	Reset & Rewind Signal
	RSLA, B	G071.6 G075.6	Spindle Output Switching Request Signal
	RST	F001.1	Reset Signal
	RT	G019.7	Manual Rapid Traverse Signal
	RWD	F000.0	Rewinding Signal

	SYMBOL	PMC address	Signal names
S	SA	F000.6	Servo Unit Ready Signal
	SBK	G046.1	Single Block Signal
	ST	G007.2	Cycle Start Signal
	STL	F000.5	Cycle Start Lamp Signal
	*SP	G008.5	Feed Hold Signal
	SPL	F000.4	Feed Hold Lamp Signal
	SF	F007.2	S Function Strobe Signal
	S00~S31	F022~025	S Function Binary Code Signal
	SFIN	G005.2	S Function Finish (Completion) Signal
	SFRA, B	G070.5 G074.5	Spindle Forward Direction Signal
	SRVA, B	G070.4 G074.4	Spindle Reverse Direction Signal
	SVC		Spindle Velocity Command (Analog Voltage) Signal
	SAR	G029.4	Spindle Speed Arrival Signal
	*SSTP	G029.6	Spindle Stop Signal
	*SSTP2, 3	G027.4, 5	2nd/3rd Spindle Stop Signal
	SOR	G029.5	Spindle Orientation Command
	SOV0~7	G030	Spindle Speed Override Signal
	SOCNA, B	G071.4 G075.4	Spindle Soft–start/Stop Cancel Signal
	SVF1~8	G126.0~7	Servo Enable Off Signal
	STLK	G007.1	Start Lock Signal
	SKIP	X004.7	Skip Signal
	SIND	G033.7	Spindle Control Selection Signal
	SSIN	G033.6	Spindle Polarity Selection Signal
	SGN	G033.5	Output Voltage Polarity Signal
	SRN	G006.0	Program Restart Signal
	SMZ	G053.6	Error Detect Signal (In–position Check)
	SPAL	F035.0	Spindle Alarm Signal
	SPSTP	G028.6	Spindle Stop Confirmation Signal
	SCLP	F038.0	Spindle Clamp Signal
	SUCLP	F038.1	Spindle Unclamp Signal

	SYMBOL	PMC address	Signal names
S	*SCPF	G028.5	Spindle Clamp Completion Signal
	*SUCPF	G028.4	Spindle Unclamp Completion Signal
	SPPHS	G038.3	Spindle Synchronous Phase Control Signal
	SPSYC	G038.2	Spindle Synchronous Control Signal
	SPSLA, B	G071.2 G075.2	Spindle Selection Signal
	STRD	G058.5	Data Input & Operation Simultaneous Mode Signal
	STWD	G058.6	Data Output & Operation Simultaneous Mode Signal
	SWS1~3	G027.0~2	Spindle Switch Signal
	SYNC1~4	G138.0~3	Simple Synchronous Axis Selection Signal
	SUNC4J	G140.3	Simple Synchronous Manual 4th Axis Selection Signal
T	TAP	F001.5	Tapping Mode Signal
	TF	F007.3	T Function Strobe Signal
	T00~T31	F026~029	T Function Binary Code Signal
	TFIN	G005.3	T Function Finish (Completion) Signal
	THRD	F002.3	Threading Mode Signal
	TL1~256	G047.0~7 G048.0	Tools Group Number Signal
	TLRST	G048.7	Tool Change Reset Signal
	TLSKP	G048.5	Tool Skip Signal
	TLCH	F064.0	Tool Change Command Signal
	TLNW	F064.1	New Tool Select Signal
	TLMLA, B	G070.0 G074.0	Low–speed Torque Limit Signal
	TLMHA, B	G070.1 G074.1	High–speed Torque Limit Signal
	TMRON	G053.0	General Purpose Timer ON Signal
U	UI0~UI15	G054~055	Input Signal by Custom Macro Function Signal
	UO0~131	F054~059	Output Signal by Custom Macro Function Signal
	UINT	G053.3	Custom Macro Interrupt Signal

	SYMBOL	PMC address	Signal names
W	WOSQM	G039.6	Work Coordinate System Shift Amount Write Mode Signal
	WOSET	G040.7	Work Coordinate System Shift Amount Write Input Signal
X	XAE	X004.0	Automatic Tool Compensation X Axis Reach Signal
Y	YAE	X004.1	Automatic Tool Compensation Y Axis Reach Signal
Z	ZRN	G043.7	Reference Position Return Mode Signal
	ZP1~8	F094.0~7	1st Reference Position Return Completion Signal
	ZP21~28	F096.0~7	2nd Reference Position Return Completion Signal
	ZP31~38	F098.0~7	3rd Reference Position Return Completion Signal
	ZP41~48	F100.0~7	4th Reference Position Return Completion Signal
	ZRF1~8	F102.0~7	Floating Reference Position Return Completion Signal
	ZAE	X004.2	Automatic Tool Compensation Z Axis Reach Signal

5 DIGITAL SERVO

This chapter describes servo tuning screen required for maintenance of digital servo and adjustment of reference position.

5.1 INITIAL SETTING SERVO PARAMETERS 248
5.2 SERVO TUNING SCREEN 253
5.3 ADJUSTING REFERENCE POSITION (DOG METHOD) 256
5.4 DOGLESS REFERENCE POSITION SETTING 258

Refer to the following manuals for maintenance of FANUC AC SERVO MOTOR α series :

1) FANUC CONTROL MOTOR α series MAINTENANCE MANUAL (B–65165E)
2) FANUC AC SERVO MOTOR α series PARAMETER MANUAL (B–65150E)

5.1 INITIAL SETTING SERVO PARAMETERS

This section describes how to set initial servo parameters, which is used for field adjustment of machine tool.

1. Turn on power at the emergency stop condition.
2. Set the parameter to display the servo tuning screen.

	#7	#6	#5	#4	#3	#2	#1	#0
3111								SVS

#0 (SVS) 0 : Servo tuning screen is not displayed.

1 : Servo tuning screen is displayed.

3. Turn off the power once then turn it on again.
4. Display the servo parameter setting screen by the following operation: [SYSTEM] key [▷] [SV.PARA].
5. Input data required for initial setting using the cursor and page key.

```
SERVO SETTING
                        X AXIS       Y AXIS
(1)INITIAL SET BIT    00000000     00000000   ⇦PRM 2000
(2)MOTOR ID NO.             47           47   ⇦PRM 2020
(3)amr                00000000     00000000   ⇦PRM 2001
(4)cmr                       2            2   ⇦PRM 1820
(5)FEED GEAR N               1            1   ⇦PRM 2084
(6)       (N/M)  M         125          125   ⇦PRM 2085
(7)DIRECTION SET             111          111   ⇦PRM 2022
(8)VELOCITY PULSE NO.   8192         8192      ⇦PRM 2023
(9)POSITION PULSE NO. 12500         12500     ⇦PRM 2024
(10)REF.COUNTER          8000         8000      ⇦PRM 1821
```

(1) INITIAL SET BIT

	#7	#6	#5	#4	#3	#2	#1	#0
2000					PRMCAL		DGPRM	PLC01

#3 (PRMCAL) 1 : Turns to 1 when the initial setting is done.
The following parameters are set automatically in accordance with the no. of pulses of pulse coder:
PRM 2043(PK1V), PRM 2044(PK2V), PRM 2047(POA1),
PRM 2053(PPMAX),PRM 2054(PDDP),
PRM 2056(EMFCMP),
PRM 2057(PVPA), PRM 2059(EMFBAS),
PRM 2074(AALPH),PRM 2076(WKAC)

#1 (DGPRM)☆ 0 : Initial setting of digital servo parameter is done.

1 : Initial setting of digital servo parameter is not done.

#0 (PLC01) 0 : Values of parameter 2023 and 2024 are used as they are:

1 : Values of parameter 2023 and 2024 are multiplied by 10.

(2) MOTOR NUMBER

DGN | 2020 | Motor type no. per axis

Motor type no. that can be set are 15 to 26 and 39 to 84.

1 For185V input amplifier (A06B–xxxx–B□□□)

Format number	42	54	56	57	58	59	60
Drawing number (Item of xxxx)	0531	0506	0561	0562	0564	0571	0572
Model name	5–0	30/ 2000	0L	5L	6L	7L	10L

2 For 200V to 230V input amplifier (A06B–xxxx–B□□□)

Format number	43	44	45	46	47	48	49
Drawing number (Item of xxxx)	0532	0433	0371	0372	0313	0314	0316
Model name	4–0S	3–0S	2–0SP	1–0SP	0S	5S	6S

Format number	50	51	52	53	80	82	
Drawing number (Item of xxxx)	0315	0505	0502	0590	0382	0384	
Model name	10S	20S/ 1500	20S	30S	5T	10T	

3 For 200V to 230V input amplifier (for large motor) (A06B–xxxx–B□□□)

Format number	39	40	41				
Drawing number (Item of xxxx)	0331	0332	0333				
Model name	50S	60S	70S				

4 For 200V to 230V input amplifier (for high speed motor) (A06B–xxxx–B□□□)

Format number	61	62	63	64	65	66	67
Drawing number (Item of xxxx)	0371	0373	0313	0514	0317	0318	0319
Model name	2–0SP	1–0SP/	0S	5S/ 3000	10S/ 3000	20S/ 3000	30S/ 3000

Format number	73	78	79	81	83	84	
Drawing number (Item of xxxx)	0320	0583	0381	0383	0385	0374	
Model name	6S/ 3000	40S/ 2000	0T/ 3000	5T/ 3000	10T/ 3000	00SP	

5 For 185V input amplifier (for L series high–speed motor) (A06B–xxxx–B□□□)

Format number	68	69	70	71	72		
Drawing number (Item of xxxx)	0561	0562	0564	0571	0572		
Model name	0L/ 3000	5L/ 3000	6L/ 3000	7L/ 3000	10L/ 2250		

6 For a series(A06B–xxxx–B□□□)

Format number	15	16	17	18	19	20	21
Drawing number (Item of xxxx)	0123	0127	0128	0142	0143	0147	0148
Model name	α3/ 3000	α6/ 2000	α6/ 3000	α12/ 2000	α12/ 3000	α22/ 2000	α22/ 3000

Format number	22	23	24	25	26
Drawing number (Item of xxxx)	0152	0153	0161	0162	0163
Model name	α30/ 2000	α30/ 3000	αM3	αM6	αM9

(3) ARBITARY AMR(for 5–0S to 3–0S)

		#7	#6	#5	#4	#3	#2	#1	#0
PRM	2001	AMR7	AMR6	AMR5	AMR4	AMR4	AMR3	AMR2	AMR1

#7	#6	#5	#4	#3	#2	#1	#0	Motor model
1	0	0	0	0	0	1	0	5–0S
0	0	0	0	0	0	1	1	4–0S, 3–0S
0	0	0	0	0	0	0	0	other than above

Set “00000000” for serial pulse coder C.

(4) CMR

DGN	1820	Command multiply ratio

1 When CMR is 1/2 to 1/27 Set value= $\frac{1}{\text{CMR}}$ +100

2 When CMR is 0.5 to 48 Set value=2×CMR

(5) Turn off power once, then turn it to on.

(6) Feed gear N/M

FRM	2084	n of flexible feed gear
FRM	2085	m of flexible feed gear

1 For serial pulse coder A or B, and serial a pulse coder.

$$\frac{n}{m} = \frac{\text{No. of feedback pulses per revolution of motor}}{1000000}$$

For serial pulse coder B, set 250,000 pulses or less to parameter 2084.

Examples

Examples of calculation

		1/1000 mm	1/10000 mm
1 rotation of motor	8mm	n=1/m=125	n=2/m=25
	10mm	n=1/m=100	n=1/m=10
	12mm	n=3/m=250	n=3/m=25

2 For serial pulsecoder C

$$\frac{n}{m} = \frac{\text{No. of feedback pulses per revolution of motor}}{40000}$$

Examples of calculation

		1/1000 mm
1 rotation of motor	8mm	n=1/m=5
	10mm	n=1/m=4
	12mm	n=3/m=10

(7) Direction of Travel

PRM	2022	Direction of motor rotation

111 : Positive (CCW) –111 : Reverse (CW)

(8) No. of velocity pulses and position pulses

1 For serial pulse coder A or B and serial α pulse coder

	Para–meter no.	Resolution 1/1000mm		Resolution 1/10000mm	
		Full close	Semi close	Full close	Semi close
High resolution setting	2000	xxxx xxx 0		xxxx xxx 1	
Separate detector	1815	0010 0010	0010 0000	0010 0010	0010 0000
Velocity feedback pulses	2023	8192		819	
Position feedback pulses	2024	NS	12500	NS/10	1250

2 For serial pulse coder C

	Para–meter no.	Resolution 1/1000mm	
		Full close	Semi close
High resolution setting	2000	xxxx xxx1	
Separate detector	1815	0000 0010	0000 0000
Velocity feedback pulses	2023	4000	
Position feedback pulses	2024	NS/10	4000

NS is the no. of position feedback pulses times 4.
For 5–0S to 3–0S motor, since the no. of poles is different, set parameter 2001.
Even if the system is of full closed loop PMR 2002#3=1 #4=0.

(9) Reference counter

PRM	1821	Reference counter capacity(0～99999999)

6. Turn off power then turn on power.

5.2 SERVO TUNING SCREEN

5.2.1 Parameter Setting

Set a parameter to display the servo tuning screen.

	#7	#6	#5	#4	#3	#2	#1	#0
3111								SVS

#0 (SVS) 0 : Servo tuning screen is not displayed.
1 : Servo tuning screen is displayed.

5.2.2 Displaying Servo Tuning Screen

1. Press SYSTEM key ▷ and soft key **[SV. PARA]** in this order.
2. Press soft key **[SV.TUN]** to select the servo tuning screen.

```
SERVO TUNING                          01234 N12345
(PAMAMETER)                           (MONITOR)
(1) FUN.BIT        00000000      ALARM 1      00000000 (9)
(2) LOOP GAIN          3000      ALARM 2      00000000 (10)
(3) TURNING SET.          0      ALARM 3      10000000 (11)
(4) SET PERIOD           50      ALARM 4      00000000 (12)
(5) INT.GAIN            113      ALARM 5      00000000 (13)
(6) PROP.GAIN         -1015      LOOP GAIN        2999 (14)
(7) FILER                 0      POS ERROR         556 (15)
(8) VELOC.GAIN          125      CURRENT%           10 (16)
                                 SPEED RPM         100 (17)

[SV SET][SV TUN][      ][      ][ OPE ]
```

1 Function bit : PRM 2003
2 Loop gain : PRM 1825
3 Tuning start : (Used by automatic servo tuning function)
4 Set period : (Used by automatic servo tuning function)
5 Integral gain : PRM 2043
6 Proportional gain : PRM 2044
7 Filter : PRM 2067
8 Velocity gain $\text{Set value} = \frac{(\text{PRM } 2021)+256}{256} \times 100$
9 Alarm 1 : DGN 200 (Details of alarm 400 and 414)
10 Alarm 2 : DGN 201 (Details of disconnection alarm, overload)
11 Alarm 3 : DGN 202 (Details of alarm 319)
12 Alarm 4 : DGN 203 (Details of alarm 319)
13 Alarm 5 : DGN 204 (Details of alarm 414)
14 Loop gain : Actual loop gain
15 Position error : Actual position error(DGN 300)
16 Current(%) : Indicate current with % to the rated value.
17 Speed RPM : Number of motor actual rotation

	#7	#6	#5	#4	#3	#2	#1	#0
Alarm1	OVL	LV	OVC	HCA	HVA	DCA	FBA	OFA

DGN (200) :

#7 (OVL) : Overload alarm

#6 (LV) : Insufficient voltage alarm

#5 (OVC) : Overcurrent alarm

#4 (HCA) : Abnormal current alarm

#3 (HVA) : Excessive voltage alarm

#2 (DCA) : Discharge alarm

#1 (FBA) : Disconnection alarm

#0 (OFA) : Overflow alarm

	#7	#6	#5	#4	#3	#2	#1	#0
Alarm2	ALD			EXP				

DGN (201)⇓

Over-load alarm	0	—	—	—	Amplifier overheat
	1	—	—	—	Motor overheat
Discon-nection alarm	1	—	—	0	Built–in pulse coder disconnec-tion (Hardware)
	1	—	—	1	Separate type pulse coder dis-connection (Hardware)
	0	—	—	0	Pulse coder disconnection (soft-ware)

	#7	#6	#5	#4	#3	#2	#1	#0
Alarm3		CSA	BLA	PHA	RCA	BZA	CKA	SPH

DGN (202) :

#6 (CSA) : Hardware of serial pulse coder is abnormal.

#5 (BLA) : Battery voltage is in low (warning).

#4 (PHA) : Serial pulse coder or feedback cable is abnormal.
Counting the feedback signal is in error.

#3 (RCA) : Serial pulse coder is faulty.
Counting is in error.
If the RCA bit is set to 1 when both the FBA bit (bit 1 of alarm 1) and ALD bit of alarm 2 are set to 1 and the EXP bit of alarm 2 (internal hardware disconnection) is set to 1, a count miss alarm (CMAL) occurs in the α pulse coder.

#2 (BZA) : Battery voltage becomes 0.
Replace batteries and set the reference position.

#1 (CKA) : Serial pulse coder is faulty.
Internal block has stopped.

#0 (SPH) : Serial pulse coder or feedback cable is faulty.
Counting the feedback signal is in error.

	#7	#6	#5	#4	#3	#2	#1	#0
Alarm4	DTE	CRC	STB					

DGN (203) :

#7 (DTE) : Communication error of serial pulse coder.
There is no response.

#6 (CRC) : Communication error of serial pulse coder.
Transmitted data is in error.

#5 (STB) : Communication error of serial pulse coder.
Transmitted data is in error.

	#7	#6	#5	#4	#3	#2	#1	#0
Alarm3		OFS	MCC	LDM	PMS			

DGN (204) :

#6 (OFS) : A/D conversion of current value of digital servo is abnormal.

#5 (MCC) : Contacts of electro–magnetic contactor of servo amplifier is blown

#4 (LDM) : LED of serial pulse coder is abnormal.

#3 (PMS) : No. of feedback pulses are in error because serial pulse

: coder C or feedback cable is faulty.

5.3 ADJUSTING REFERENCE POSITION (DOG METHOD)

5.3.1 General

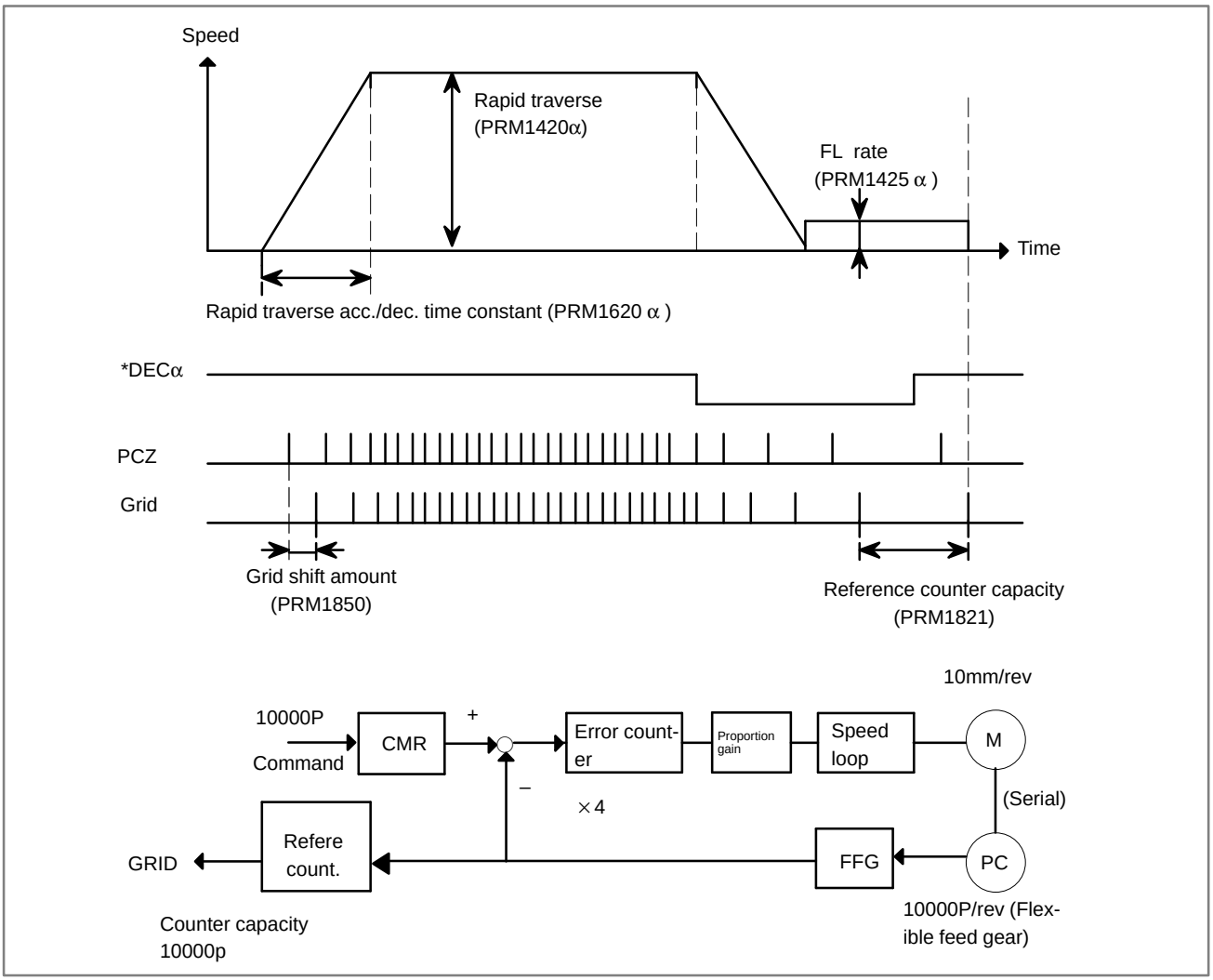

- **Parameter**

		#7	#6	#5	#4	#3	#2	#1	#0
PRM	1002							DLZ	

#1(DLZ)☆ 0 : Reference position return method is normal (dog).

1 : Dogless reference position setting is used.

PRM	1821	Reference counter capacity [P]

No. of feedback pulses or its division by an integer is set.

PRM 1850 Grid shift amount per axis [P]

When the resolution is 0.0001mm, set the value in the unit ten times the detection unit.

PRM 1815

#7	#6	#5	#4	#3	#2	#1	#0
		APC	APZ			OPT	

#5(APC) 0 : Position detector is other than absolute pulse coder.

1 : Position detector is absolute pulse coder.

#4(APZ) Zero position of absolute pulse coder is :

0 : Not established

1 : Established
(Turns to 1 after establishment)
To manually change the value of the APZ bit from 0 to 1 without first returning to the reference position
when using serial pulse coder α , follow this procedure: Back up the data with the battery and give the motor one or more turns.
Turn the power off then on again, then change the APZ bit setting from 0 to 1.

#1(OPT) 0 : Position detection is performed by the pulse coder built in the motor.

1 : Separate type pulse coder or linear scale is used.

- **Separate Type Pulse Coder or Linear Scale is Used**

PRM 1821 Reference counter capacity per axis [P]

Normally, the number of feedback pulses per motor revolution is set to the reference counter capacity.
When plural reference marks are on a linear scale, a quotient of the distance between the reference marks divided by an interfer may be used as a reference counter capacity:

Example

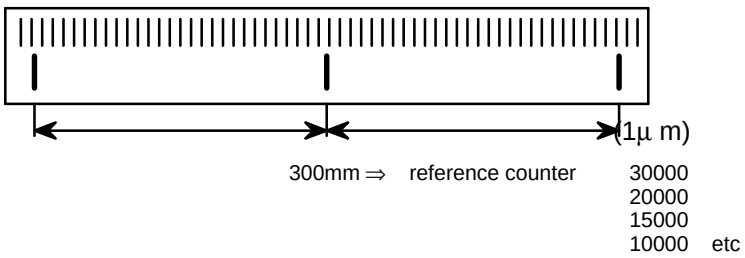

5.4 DOGLESS REFERENCE POSITION SETTING

When there are no dog nor limit switch for reference position return, this function enables the tool to return the reference position that is set by MTB.
When the absolute position detector is used, the reference position once set remains also during power off. When the absolute detector is replaced or absolute position is lost, perform this setting.

5.4.1 General

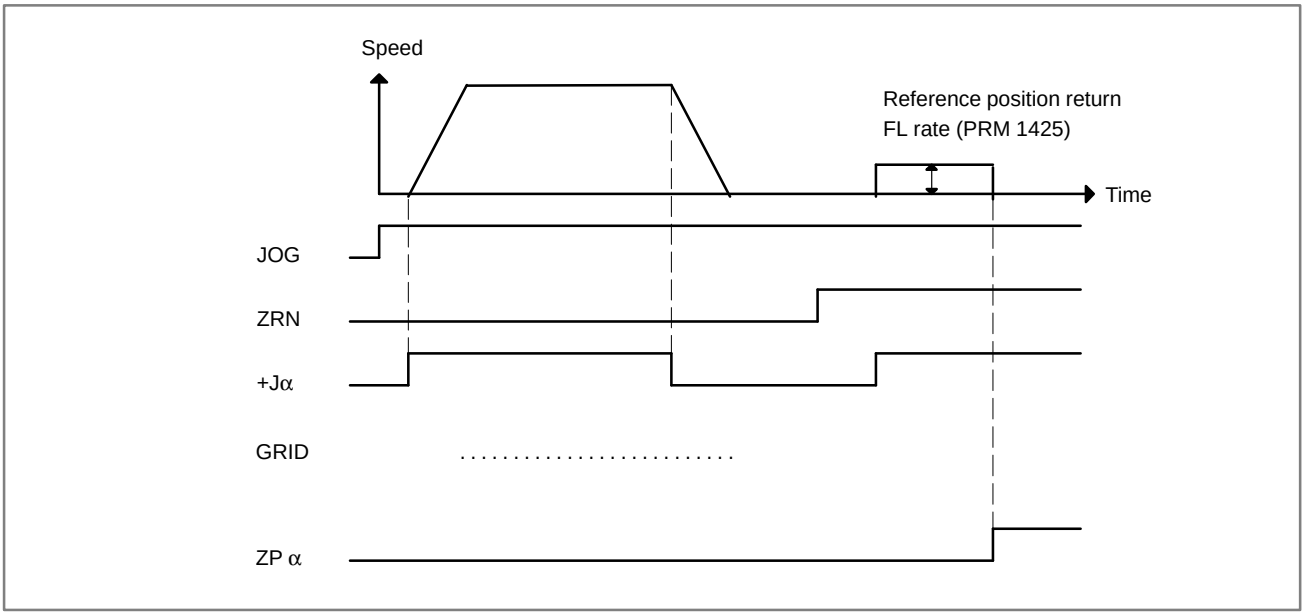

5.4.2 Operation

1 Move the tool near the reference position using a manual operation.
2 Select the reference position return mode or switch.
3 Press a button for an axis–and–direction–select–signal + or –, and the machine moves to the next grid, then stops.
(This position is set as the reference position).
After the reference position has been set, select the reference position return mode(SRN signal is 1) and turn on an axis–and–direction–select signal, then the tool returns to the reference position.

5.4.3
Associated Parameters

		#7	#6	#5	#4	#3	#2	#1	#0
PRM	1002							DLZ	

#1(DLZ) 0 : Dog is used for reference position return

☆ 1 : Dogless reference position setting

		#7	#6	#5	#4	#3	#2	#1	#0
PRM	1006			ZMI					

#5(ZMI) 0 : Reference position return and backlash initial direction is +.

1 : Reference position return and backlash initial direction is –.

After ZRN signal becomes 1, manual feed direction is always the direction set by this parameter irrespective of an axis selection signal.

6 AC SPINDLE (SERIAL INTERFACE)

This chapter describes the parameter tuning screen of serial interface spindle amplifier.

6.1 GENERAL OF SPINDLE CONTROL (SERIAL* INTERFACE) 261
6.2 TABLE OF TEST POINTS 263
6.3 CONFIRMING POWER SUPPLY (SERIAL INTERFACE) 266
6.4 SPINDLE SETTING AND TUNING SCREEN 269
6.5 AUTOMATIC SETTING OF STANDARD PARAMETERS 277

On the serial interface spindle amplifier, the following specification number is printed on upper part of the spindle unit

A06B–6063–Hxxx or
A06B–6064–Hxxx or
A06B–6065–Hxxx
(xxx is any)

Refer to the following manuals for maintenance of FANUC AC SPINDLE MOTOR α series :

1) FANUC CONTROL MOTOR α series MAINTENANCE MANUAL (B–65165E)
2) FANUC AC SPINDLE MOTOR α series PARAMETER MANUAL (B–65160E)

6.1 GENERAL OF SPINDLE CONTROL (SERIAL* INTERFACE)

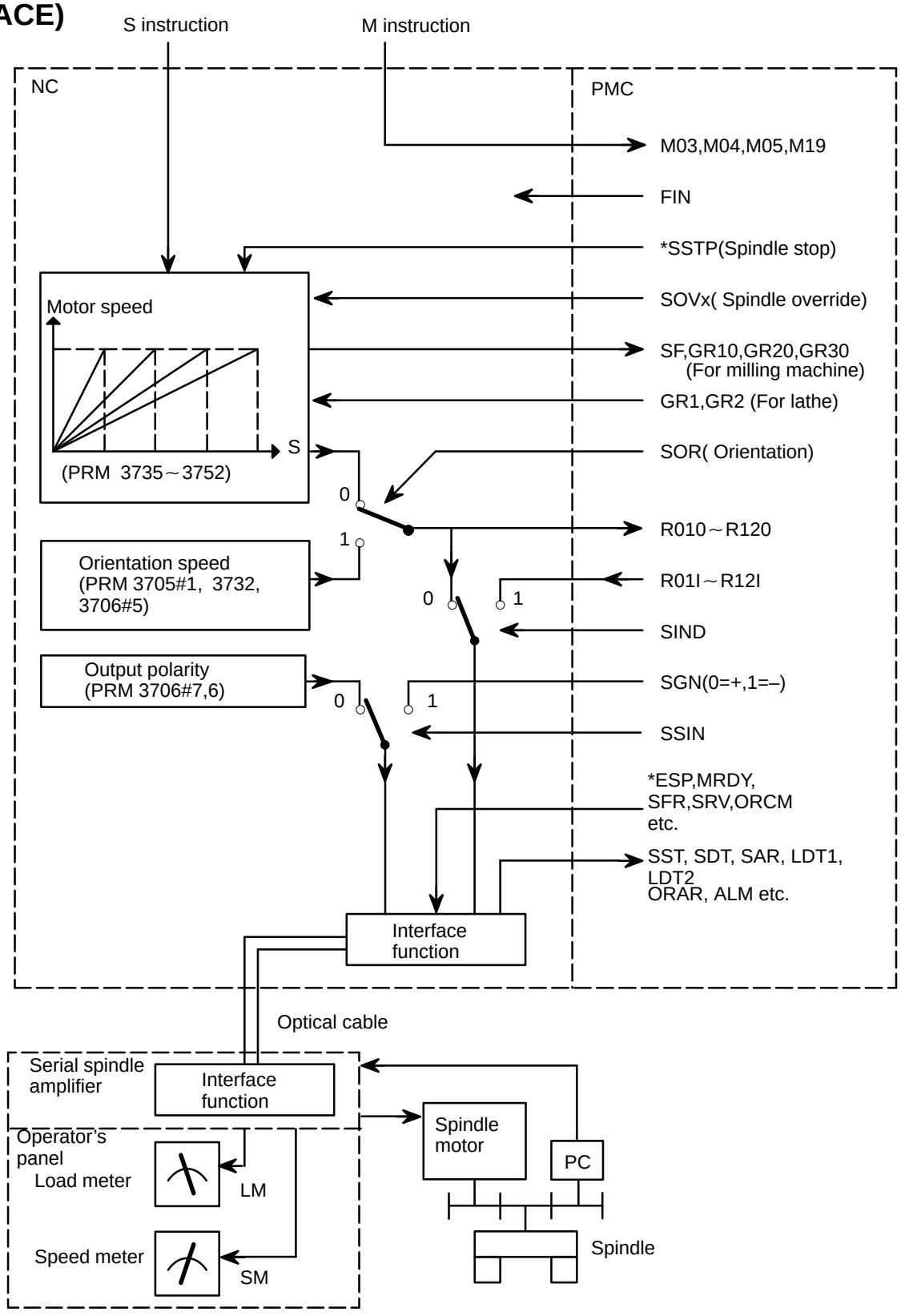

6.1.1 Method A of Gear Change for Machining Center

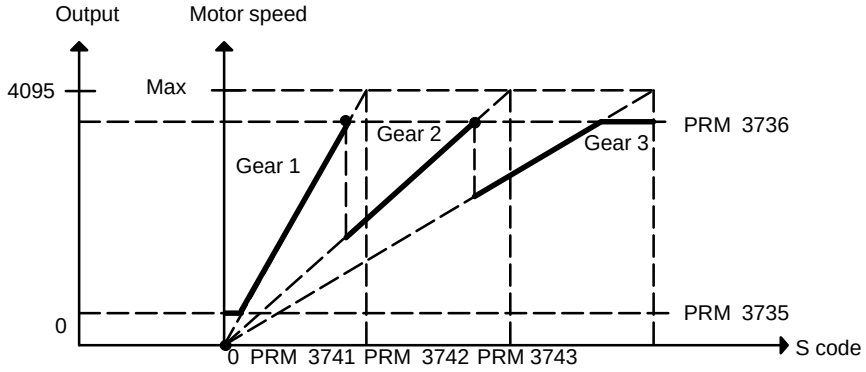

6.1.2 Method B of Gear change for Machining Center(PRM 3705#2=1)

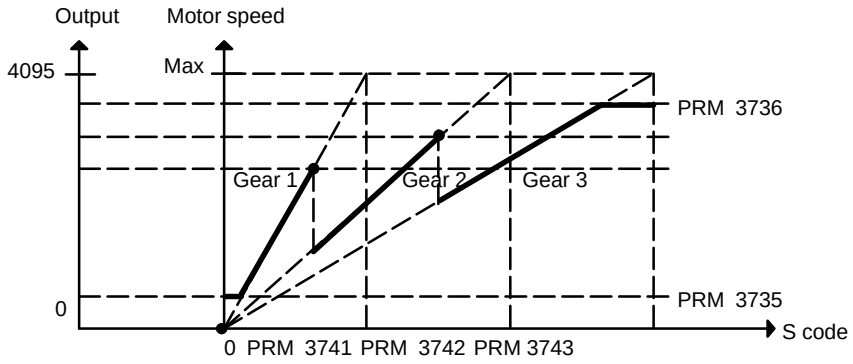

6.1.3 For Lathe

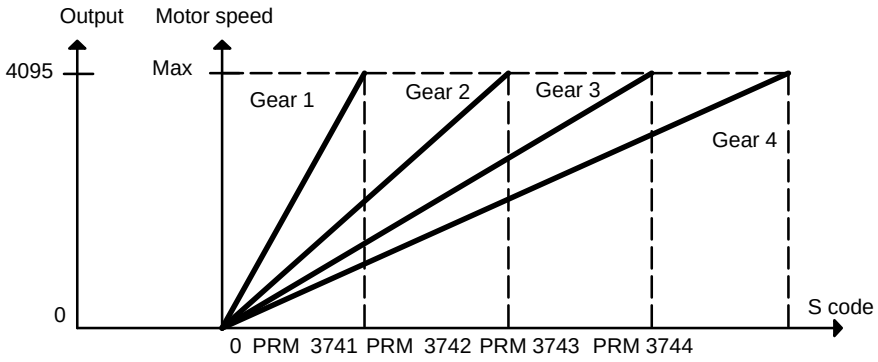

6.2 TABLE OF TEST POINTS

6.2.1 Printed Circuit Board (A16B–2201–0440)

Name	Signal	Remarks
PA	Pulse–generator phase A	90°advance for PB in a CW rotation Vpp=0.36～0.5V
PB	Pulse–generator phase B	90° delay for PA in a CW rotation Vpp=0.36～0.5V
RA	Phase–A reference voltage	DC +2.5V～0.2V
RB	Phase–B reference voltage	DC +2.5V～0.2V
PAAS	Signal with the amplitude 10 times that of PA	90° advance for PB in a clockwise direction,V_{p-p}=3.6 to 0.5V
PBAS	Signal with the amplitude 10 times that of PB	90 delay for PA in a clockwise direction,V_{p-p}=3.6V to 5.0V
PAA	A phase pulse waveform	Duty 50% (ON/ OFF ratio)
PBA	B phase pulse waveform	Duty 50% (ON/ OFF ratio)
*ITP1	ITP pulse	Synchronous signal from the CNC
TR	Serial data transmission signal	The high level of this signal indicates that serial data is being transmitted from the CNC
MSA	Magnetic sensor output MSA signal	One signal per rotation
LSA	Magnetic sensor output LAS signal	One signal per rotation
*LS	LSA pulse signal	One signal per rotation
PAE2	Position–coder phase A	Duty 50% (ON/ OFF ratio)
PBE2	Posiiton–coder phase B	Duty 50% (ON/ OFF ratio)
PSE2	Position–coder phase Z	1 pulse/rotation
*PELS	Position coder cable is broken	The low level of this signal indicates that the wire is broken.
CLK1	Clock signal	8MHz, 50% duty
VDC	DC link voltage signal	Voltage that is 1/100 of the DC link voltage
SDC	Control power DC link voltage signal	Voltage that is 1/100 of the DC voltage of the input power
+24V	+24V DC voltage	+20V to +26V
+15V	+15V DC voltage	+15V ±4%
+5V	+5V DC voltage	+5V±%
–15V	–15V DC voltage	–15V±4%
0V		

<table>
<tr><th>Name</th><th>Signal</th><th>Remarks</th></tr>
<tr><td>IU</td><td>U–phase current detection signal</td><td rowspan="2"><table>
<tr><th>Amplifier</th><th>Current</th></tr>
<tr><td>Model 1S～3S</td><td>21.9A/V</td></tr>
<tr><td>Model small 6S,6S～12S</td><td>33.3A/V</td></tr>
<tr><td>Model 15S</td><td>41.7A/V</td></tr>
<tr><td>Model 15S～22S</td><td>66.7A/V</td></tr>
<tr><td>Model 26S</td><td>83.3A/V</td></tr>
<tr><td>Model Small 30S</td><td>111.1A/V</td></tr>
<tr><td>Model 30S</td><td>83.3A/V</td></tr>
<tr><td>Model 40S</td><td>104.2A/V</td></tr>
<tr><td>Model 30HV,40HV</td><td>50.5A/V</td></tr>
<tr><td>Model 60HV</td><td>94.7A/V</td></tr>
</table></td></tr>
<tr><td>IV</td><td>V–phase current detection signal</td></tr>
</table>

6.2.2 Signal Waveform At Test Points

Check terminal	Waveform	Remarks
PA PB	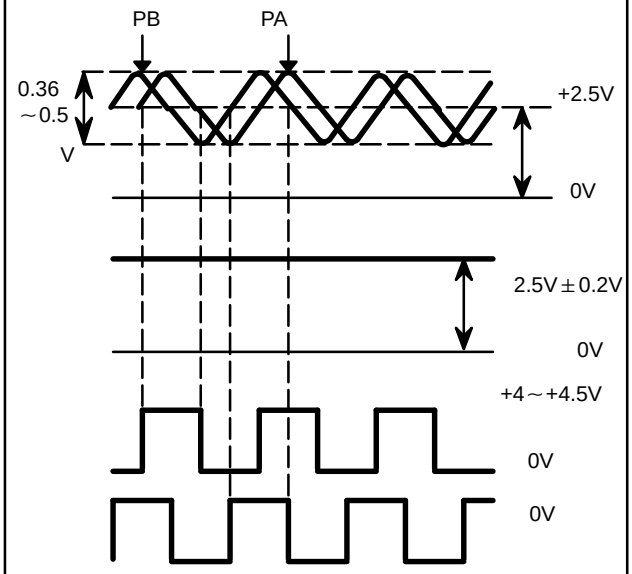	Pulse generator output Phase difference between PA and PB is 90°
RA RB		Nominal voltage
PAA		
PBA		Signal formed by PA/PB
IU	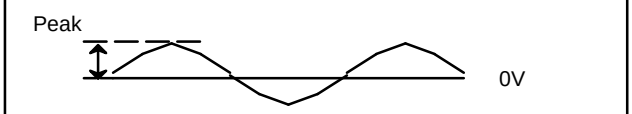	Current feedback signal of each phase Peak value is proportional to current value
IV	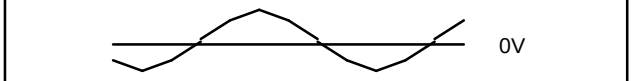	
CLK1	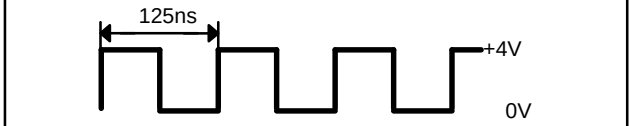	Clock 8MHz

6.3 CONFIRMING POWER SUPPLY (SERIAL INTERFACE)

6.3.1 Power Supply

Confirm AC power voltage and DC current on spindle control circuit PCB as follows:

AC power supply	Check terminals R,S,T,G
DC voltage on spindle control circuit PCB	

Volt	Test points	Rated value
+24V	Across +24V to 0V	+20～+26V
+15V	Across +15V to 0V	+15V±4%
+5V	Across +5V to 0V	+5V±2%
–15V	Across –15V to 0V	–15V±4%

6.3.2 Test Points

- **A20B–1003–0550**

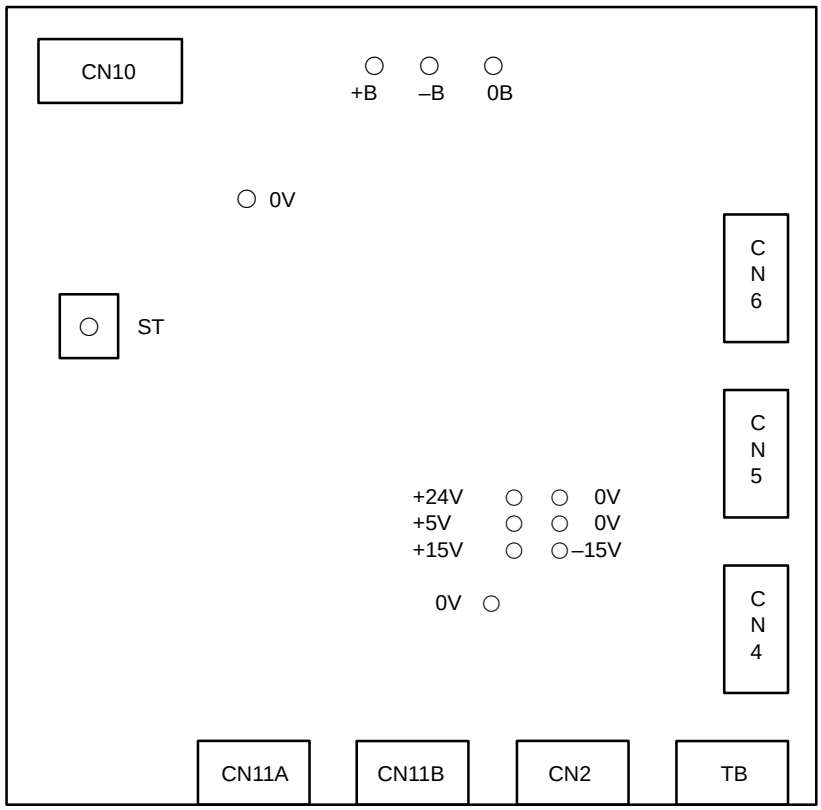

- **A20B–1003–0920**

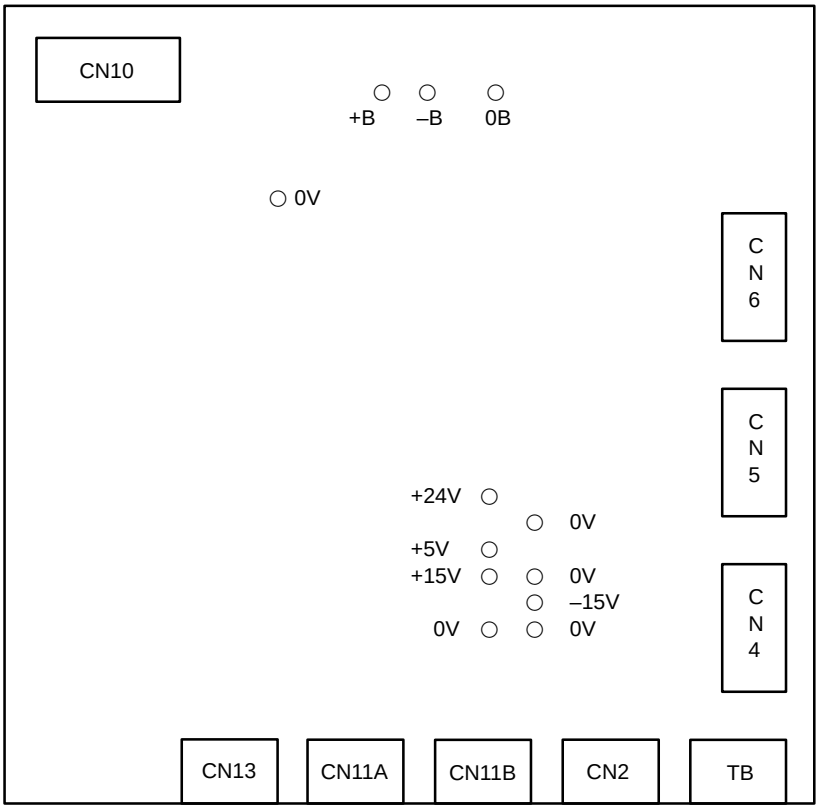

- **A16B–2201–0010**
  A16B–2201–0440

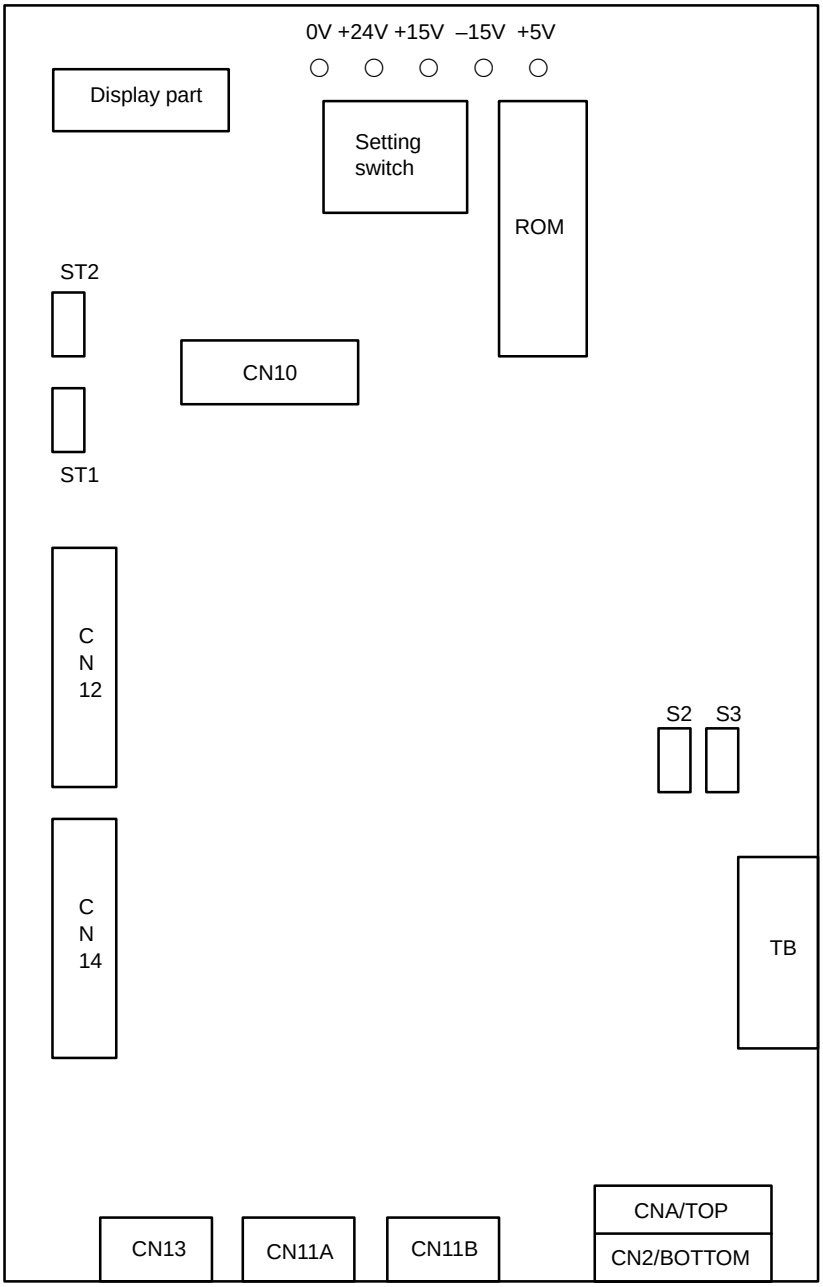

6.4 SPINDLE SETTING AND TUNING SCREEN

6.4.1 Display Method

1. Confirm the parameters

	#7	#6	#5	#4	#3	#2	#1	#0
3111							SPS	

#1 (SPS) 0 : Spindle tunign screen is not displayed.

☆ 1 : Spindle tuning screen is displayed.

2. Press [SYSTEM] key.
3. Press soft key [▷].
4. Press soft key **[SP–PRM]** and the spindle tuning screen is displayed.
5. The following screens are available and they can be selected by soft key.
   1 **[SP.SET]** : Spindle setting screen
   2 **[SP.TUN]** : Spindle tuning screen
   3 **[SP.MON]** : Spindle monitor screen

6.4.2 Spindle Setting Screen

```
SPINDLE SETTING
(1)GEAR SELECT     : 1
(2)SPINDLE         : S11

  (PARAMETER)
(3)GEAR RATIO          50
(4)MAX SPINDLE SPEED 3000
(5)MAX MOTOR SPEED   6000
(6)MAX C AXIS SPEED   100
```

- **Gear select**

Shows gear selected on the machine side.

Display	CTH1	CTH2
1	0	0
2	0	1
3	1	0
4	1	1

- **Spindle**

Shows spindle concerned
S11: Main spindle amp. of 1st spindle
S12 : Sub spindle amp. of 1st spindle
S21 : Main spindle amp. of 2nd spindle
S22 : Sub spindle amp. of 2nd spindle

- **Parameter**

	S11:1st Main	S12:1st Sub	S21:2nd Main	S22:2nd Sub
Gear ratio(HIGH)	4056	4216	4056	4216
Gear ratio(MIDIUM HIGH)	4057		4057	
Gear ratio(MIDIUM LOW)	4058	4217	4058	4217
Gear ratio(LOW)	4059		4059	
Max. spindle rpm (Gear1)	3741		3741	
Max. spindle rpm (Gear2)	3742		3742	
Max. spindle rpm (Gear3)	3743		3743	
Max. spindle rpm (Gear4)	3744		3744	
Max. motor speed	4020	4196	4020	4196
Max. C axis speed	4021	None	4021	None

6.4.3 Spindle Tuning Screen

```
SPINDLE TUNING

OPERATION    : SPEED CONTROL
GEAR SELECT  : 1
SPINDLE      : S11
(PARAMETER)              (MONITOR)
PROP.GAIN     20         MOTOR SPEED   100
INT.GAIN      50         SPINDLE SPEED 150
LOOP GAIN   3000         POS ERR S1 100
MOTOR VOLT    30         POS ERR S2 103
TIME CONST   100         SYN.ERR     3
REF. SHIFT  2046
```

- **Operation mode**

1 : Speed control (normal mode)
2 : Spindle Orientation
3 : Synchronization control
4 : Rigid tapping
5 : Spindle contouring control (Cs axis control)
6 : Spindle positioning control

- **Display of parameter**

Display of parameter contents changes depending on operation mode.

	Normal operation	Orientation	Synchro. control	Rigid tapping	Cs axis control	Spindle positioning control
Proportional gain	○	○	○	○	○	○
Integral gain	○	○	○	○	○	○
Position loop gain	–	○	○	○	○	○
Motor voltage	○	○	○	○	○	○
Regenerative power	○	–	–	–	–	–
ZRN gain %	–	–	–	○	○	○
Shift reference point	–	○	○	○	○ (%)	○
Shift spindle stop pos.	–	○	–	–	–	–
ORAR gain (%)	–	○	–	–	–	–
Acc./Dec. time constant	–	–	○ (%)	–	–	–

Refer to item 6.4.5 for correspondence between operation mode and parameters.

- **Display of monitor**

Display of monitor contents changes depending on operation mode.

	Normal operation	Orientation	Synchro. control	Rigid tapping	Cs axis control	Spindle positioning control
Motor speed	○	○	○	○	○	○
Spindle speed	○	○	○	○	○	–
Position deviation S1	–	○	○	○	○	○
Position deviation S2	–	–	○	–	–	–
Position deviation Z	–	–	–	○	–	–
Synchronous deviation	–	–	○	○	–	–
Feed rate	–	–	–	–	–	○

1) Motor speed [rpm] $= \frac{\text{Spindle data}}{16383} \times$ Max. Motor rpm.(*)

(*) PRM 4020: Main Sp.
PRM 4196: Sub. Sp.

2) Unit of spindle speed of Cs axis control is deg/min.

6.4.4 Spindle Monitor Screen

```
SPINDLE MONITOR SCREEN
 ALARM         : AL–27(POSITION CODER DIS.)
 OPERATION     : Cs AXIS OONTROL
 SPINDLE SPEED : 100 DEG/MIN
 MOTOR SPEED   : 150 RPM

                  0   50  100  150  200
  LOAD METER (%)  ┌───┬───┬───┬───┬───┐
                  ■■■■■
  CONTROL INPUT : ORCM MRDY *ESP
  CONTROL OUTPUT : SST SDT ORAR
```

- **Spindle alarm**

1: Motor overheated
2: Speed deviation excessive
3: Fuse blow of DC link
4: Fuse blow of AC inputline
5: Fuse blow of DC voltage
7: Excessive speed
9: Heat sink overheat
10: Low voltage of AC input
11: Excess voltage in DC link
12: Excess current in DC link
13: CPU internal data memory error
18: ROM SUM check error
19: U phase current offset excessive
20: V phase current offset excessive
24: Serial data transmission abnormal
25: Serial data transmission stop
26: Cs axis speed detecting signal failure
27: Position coder signal disconnection
28: Cs pos.detect signal disconnection
29: Short time overload
30: Input circuit excess current
31: Speed detecting signal disconnection
32: SLC LSI internal RAM abnormal
33: DC link charging insufficient
34: Parameter abnormal setting
35: Gear ratio data excessive
36: Error counter overflow
37: Speed detecting unit error setting
38: Magnetic sensor signal abnormal
39: Alarm of one revolution signal for Cs axis control is detected
40: Alarm of one revolution signal for Cs axis control is not detected
41: Erroneous detection of the position coder one revolution signal
42: Undetection of the position coder one revolution signal
46: Erroneous detection of the position coder one revolution signal on threading
47: Abnormal position coder signal
48: Erroneous detection of position coder one revolution signal

- **Operation**

Following 6 modes are available:

a. Normal operation
b. Orientation
c. Synchronous operation
d. Rigid tapping
e. Cs contour cotrol
f. Spindle positioning control

- **Load meter**

The load meter displays spindle load in a unit of 10%.

$$\text{1) Load meter[\%]} = \frac{\text{Load meter data}}{3276} \times \text{Max.output value of load meter (*)}$$

(*) PRM 4127: Main
PRM 4274: Sub.

- **Control input signal**

Max.10 signals those are ON are displayed from the following signals:

TLML	: Torque limit command (low)	SPSL	: Spindle selection signal
TLMH	: Torque limit command (high)	MCFN	: Power line switching
CTH1	: Gear signal 1	SOCN	: Soft start/stop cancel
CTH2	: Gear signal 2	RSL	: Output switching request
SRV	: Spindle reverse rotation	RCH	: Power line state confirm
SFR	: Spindle forward rotation	INDX	: Orientation stop pos. change
ORCM	: Spindle orientation	ROTA	: Rotation direction of ORCM
MEDY	: Machine ready	NRRO	: Shor–cut of ORCM
ARST	: Alarm reset signal	INTG	: Speed integral control signal
*ESP	: Emergency stop	DEFM	: Referencial mode command

- **Control output signals**

Max. 10 signals those are ON are displayed from the following signals:

ALM	: Alarm signal	TML5	: Torque limitation
SST	: Speed zero signal	ORAR	: Orientation end signal
SDT	: Speed detecting signal	CHP	: Power line switched signal
SAR	: Speed arrival signal	CFIN	: Spindle switch complete
LDT1	: Load detecting signal 1	RCHP	: Output switch signal
LDT2	: Load detecting signal 2	RCFN	: Output switch complete signal

6.4.5 Correspondence Between Operation Mode and Parameters on Spindle Tuning Screen

- **Speed control mode (Normal mode)**

Numerals are parameter numbers :

	S11: 1st Main	**S12: 1st Sub**	**S21: 2nd Main**	**S22: 2nd Sub**
Proportional gain(HIGH)	4040	4206	4040	4206
Proportional gain (LOW)	4041	4207	4041	4207
Integral gain(HIGH)	4048	4212	4048	4212
Integral gain(LOW)	4049		4049	
Motor voltage	4083	4236	4083	4236
Regenerative power	4080	4231	4080	4231

- **Spindle orientation mode**

Numerals are parameter numbers :

	S11: 1st Main	**S12: 1st Sub**	**S21: 2nd Main**	**S22: 2nd Sub**
Proportional gain(HIGH)	4042	4208	4042	4208
Proportional gain (LOW)	4043	4209	4043	4209
Integral gain(HIGH)	4050	4213	4050	4213
Integral gain(LOW)	4051		4051	
Position loop gain(HIGH)	4060	4218	4060	4218
Position loop gain (MID,HIGH)	4061		4061	
Position loop gain (MID,LOW)	4062	4219	4062	4219
Position loop gain(LOW)	4063		4063	
Motor voltage	4084	4237	4084	4237
Change of position gain	4064	4220	4064	4220
Stop position shift amount	4077	4228	4077	4228
Orientation by PC method	4031	4204	4031	4204

- **Synchronization control mode**

Numerals are parameter numbers :

	S11: 1st Main	**S12: 1st Sub**	**S21: 2nd Main**	**S22: 2nd Sub**
Proportional gain(HIGH)	4044	4210	4044	4210
Proportional gain (LOW)	4045	4211	4045	4211
Integral gain(HIGH)	4052	4214	4052	4214
Integral gain(LOW)	4053		4053	
Position loop gain(HIGH)	4065	4221	4065	4221
Position loop gain (MID,HIGH)	4066		4066	
Position loop gain (MID,LOW)	4067	4222	4067	4222
Position loop gain(LOW)	4068		4068	
Motor voltage	4085	4238	4085	4238
Acc./Dec. time constant	4032		4032	
Shift amount	4034		4034	

- **Rigid tapping mode**

Numerals are parameter numbers :

	S11: 1st Main	**S12: 1st Sub**	**S21: 2nd Main**	**S22: 2nd Sub**
Proportional gain(HIGH)	4044	4210	4044	4210
Proportional gain (LOW)	4045	4211	4045	4211
Integral gain(HIGH)	4052	4214	4052	4214
Integral gain(LOW)	4053		4053	
Position loop gain(HIGH)	4065	4221	4065	4221
Position loop gain (MID,HIGH)	4066		4066	
Position loop gain (MID,LOW)	4067	4222	4067	4222
Position loop gain(LOW)	4068		4068	
Motor voltage	4085	4238	4085	4238
ZRN gain %	4091	4239	4091	4239
Grid shift amount	4073	4223	4073	4223

- **Spindle contouring control mode (Cs axis control)**

Numerals are parameter numbers :

	S11: 1st Main	**S12: 1st Sub**	**S21: 2nd Main**	**S22: 2nd Sub**
Proportional gain(HIGH)	4046		4046	
Proportional gain (LOW)	4047		4047	
Integral gain(HIGH)	4054		4054	
Integral gain(LOW)	4055		4055	
Position loop gain(HIGH)	4069		4069	
Position loop gain (MID,HIGH)	4070		4070	
Position loop gain (MID,LOW)	4071		4071	
Position loop gain(LOW)	4072		4072	
Motor voltage	4086		4086	
ZRN gain %	4092		4092	
Reference position shift	4135		4135	

- **Spindle positioning control mode**

	S11: 1st Main	**S12: 1st Sub**	**S21: 2nd Main**	**S22: 2nd Sub**
Proportional gain(HIGH)	4044	4210	4044	4210
Proportional gain (LOW)	4045	4211	4045	4211
Integral gain(HIGH)	4052	4214	4052	4214
Integral gain(LOW)	4053		4053	
Position loop gain(HIGH)	4065	4221	4065	4221
Position loop gain (MID,HIGH)	4066		4066	
Position loop gain (MID,LOW)	4067	4222	4067	4222
Position loop gain(LOW)	4068		4068	
Motor voltage	4085	4238	4085	4238
ZRN gain %	4091	4239	4091	4239
Reference position shift	4073	4223	4073	4223

6.5 AUTOMATIC SETTING OF STANDARD PARAMETER

Standard parameters those are specific to each motor model can be set at a time by this operation.
Note that, however, depending on the conditions under which a motor is used, the machine tool builder may determine unique values to the parameters.
Therefore, always set the parameters (No.4000 and later) according to the parameter list attached to the machine.

1. Turn on power under emergency stop condition.
2. Set PRM4019#7 to 1.

	#7	#6	#5	#4	#3	#2	#1	#0
4019	LDSP							

#7(LDSP) Serial interface spindle parameters are:

0 : Not set automatically.

☆ 1 : Set automatically.

3. Set a motor model code.

4133	Motor model code

Code	Motor model	Code	Motor model
0	3S (1500/6000rpm)	10	18P (750/6000rpm)
1	6S (1500/6000rpm)	11	22P (750/6000rpm)
2	8S (1500/6000rpm)	12	40P (575/4500rpm)
3	12S (1500/6000rpm)	13	30P (575/4500rpm)
4	15S (1500/6000rpm)	14	50P (575/4500rpm)
5	18S (1500/4500rpm)	15	1S (3000/8000rpm)
6	30S (1150/4500rpm)	16	1.5S (1500/8000rpm)
7	8P (750/6000rpm)	17	2S (1500/8000rpm)
8	12P (750/6000rpm)	18	3S (1500/6000rpm)
9	15P (750/6000rpm)	23	0.5S (3000/8000rpm)

4. Turn off power once, then turn it on again.
“PLoAd” is displayed on the spindle amplifier PCB and the standard parameters are read.

7 AC SPINDLE (ANALOG INTERFACE)

This chapter describes connection between the analog interface spindle amplifier, block diagram, setting method of standard parameters and function confirmation procedure of the spindle amplifier.

7.1 GENERAL OF SPINDLE CONTROL (ANALOG INTERFACE) 279
7.2 TABLE OF TEST POINTS 284
7.3 SETTING PARAMETERS (DIGITAL AC SPINDLE) 287
7.4 SETTING STANDARD PARAMETERS 288
7.5 LIST OF PARAMETER 289
7.6 TUNING AFTER REPLACING PCB (S SERIES AC SPINDLE) 292

The following specification number is printed on the spindle unit for the analog interface spindle amplifier.
A06B–6059–Hxxx (xxx is any)

7.1 GENERAL OF SPINDLE CONTROL (ANALOG INTERFACE)

7.1.1 Block Diagram

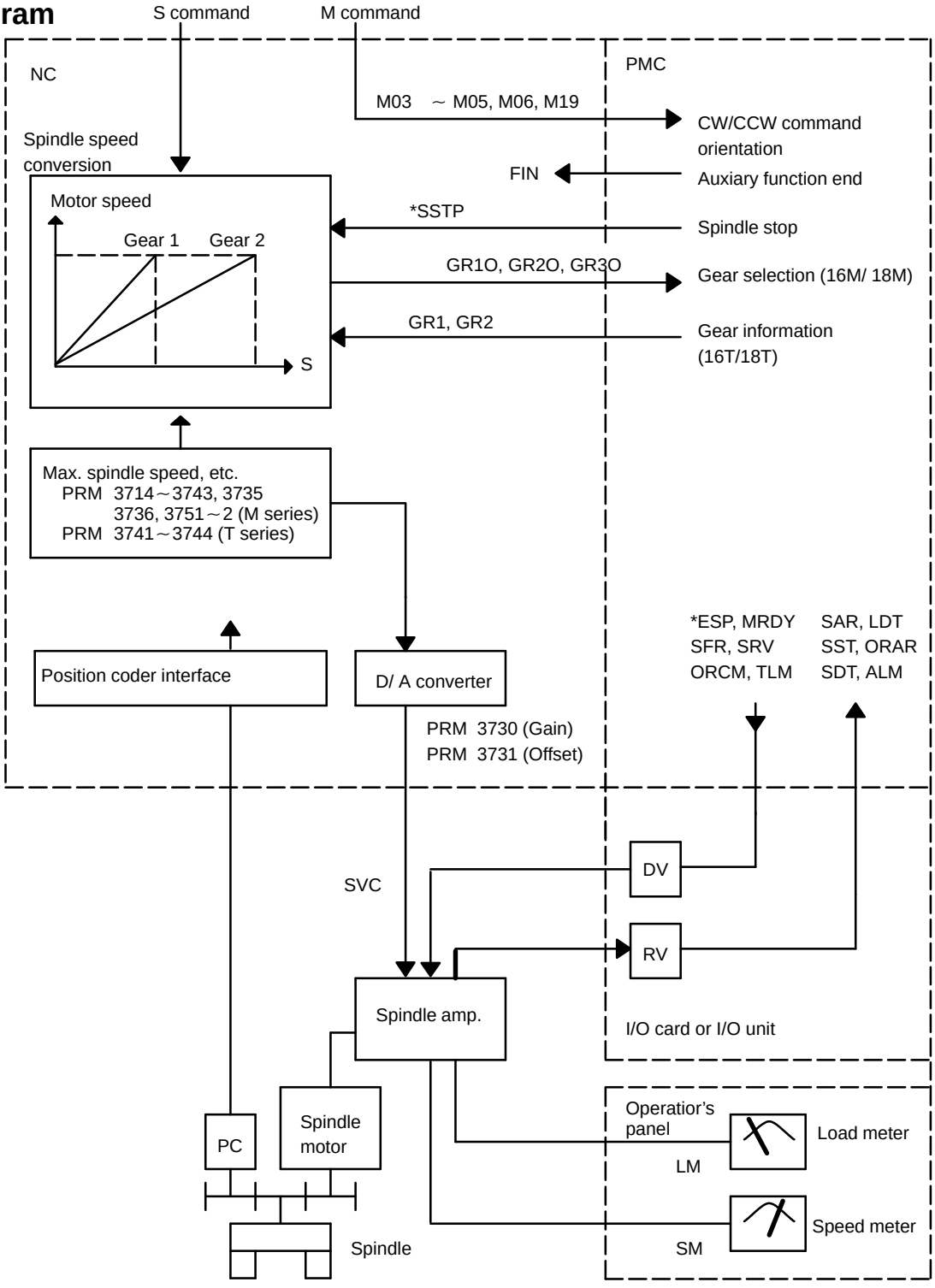

7.1.2 Calculation of S Analog Voltage and Associated Parameters

[M series]

1 Gear change method A(PRM3705#2=0)

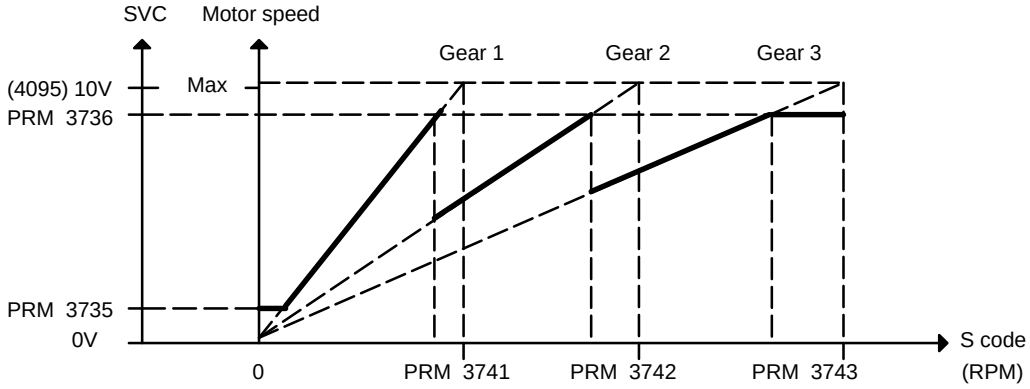

2 Gear change method B(PRM3705#2=1)

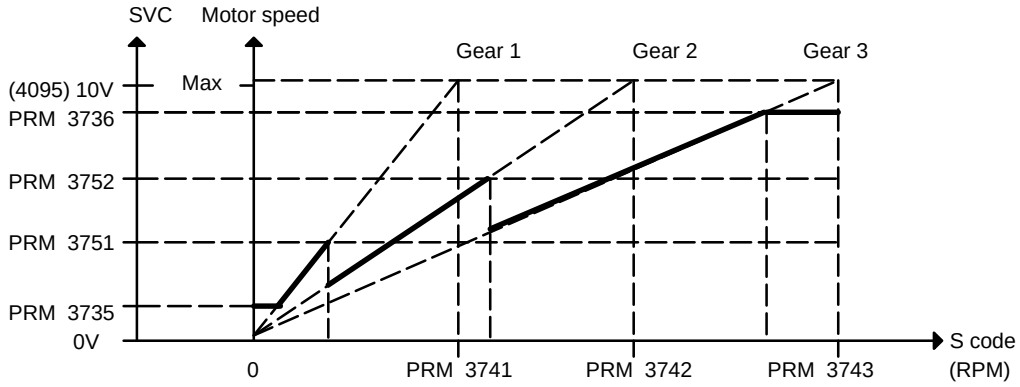

[T series]

Constant surface speed control is available

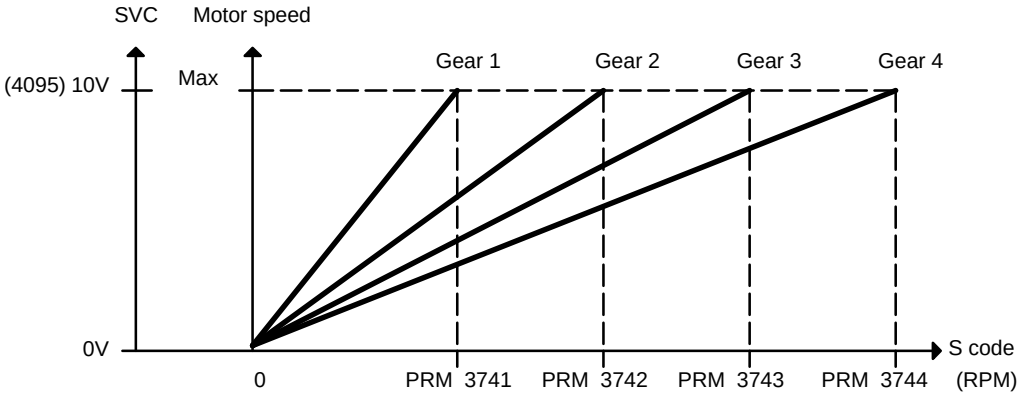

	#7	#6	#5	#4	#3	#2	#1	#0
3706	TCW	CWM						

TCW	CWM	Sign of output voltage
0	0	+ with M03 or M04
0	1	– with M03 or M04
1	0	+ with M03, – with 04
1	1	– with M03, + with M04

[M series]

	#7	#6	#5	#4	#3	#2	#1	#0
3705						SGB		

#2 (SGB) Spindle speed taken when gear is changed is

0 : Max. speed for each gear

1 : Set by respective parameters (PRM542, 543, 585, 586)

3741	Max. spindle speed of gear 1 (1～9999) [rpm]
3742	Max. spindle speed of gear 2 (1～9999) [rpm]
3743	Max. spindle speed of gear 3 (1～9999) [rpm]
3736	Upper limit of the output to the spindle motor
3735	Lower limit of the output to the spindle motor

$$\text{Set value} = \frac{\text{Spindle speed Z(upper limit/lower limit)}}{\text{Max. spindle speed}} \times 4095$$

[T series]

DGN	3741	Max. spindle speed of gear 1 (1～ 9999) [rpm]
DGN	3742	Max. spindle speed of gear 2 (1～ 9999) [rpm]
DGN	3743	Max. spindle speed of gear 3 (1～ 9999) [rpm]
DGN	3744	Max. spindle speed of gear 4 (1～ 9999) [rpm]

7.1.3 Tuning S Analog Voltage (D/A Converter)

Gear 1 is used in the following explanation, although any gear may be applied.
For the T series, select gear 1 manually or an M code.

(1) For M series, change upper and lower limit as follows:

- For gear change method A: PRM 3736=4095, PRM 3735=0
- For gear change method B: PRM 3751=4095, PRM 3735=0
  This is not required for T series.

(2) Tuning offset of D/A converter
Command spindle speed 0 and tune the following prameter so that voltage at test point DA2 on the spindle amplifier PCB becomes 0mV.

1) For M series

```
S0 ; (Command by MDI operation and press the cycle start button)
```

2) For T series (In case of G code system A)

```
G97 S0 ; (Command by MDI operation as the same as M series)
```

DGN | 3731 | Spindle speed (D/A converter) offset compensation value

(3) Tune the gain of D/A converter
Command the maximun spindle speed of gear 1 and tune the following parameter so that voltage at test point DA2 on the spindle amplifier PCB becomes 10.0V.

1) For M series

```
S×××× ;      (×××× is a value of parameter 3741)

   (Specify by MDI operation and press the cycle start button.)
```

DGN | 3741 | Max. spindle speed of gear 1 (1–9999) [rpm]

2) For T series (G code system A)

```
G97 S×××× ;      (×××× is a value of parameter 3741)

   (Specify by MDI operation and press the cycle start button.)
```

Usually a voltage is output from the D/A converter by only an S command execution. However, CW rotation command (M03) may be required on some machines.

(4) If the output voltage is not correct, perform the following calculation, change the value of parameter no. 3730 and tune the gain of D/A converter.

$$\text{Setting value} = \frac{10\text{V}}{\text{measured voltage}} \times (\text{Current value of PRM 3730})$$

(5) Execute an S command again and confirm that the output voltage is correct.

Return the parameters to the previous values.

7.2 TABLE OF TEST POINTS

7.2.1 Model 1S to 3S (Amp. Specification : A06B–6059–H00x)

Name	Signal	Remarks
DA2	Analog speed command voltage (SVC)	0 to +10V, Rated speed at 10V
PA	Pulse generator output A–phase	90° advance by PB at CW rotation V_{p-p} =0.36–0.5V
PB	Pulse generator output B–phase	90° delay by PA at CW rotation V_{p-p} =0.36–0.5V
RA	A–phase standard voltage	+2. 5VDC ±0. 2V
RB	B–phase standard voltage	+2. 5VDC ±0. 2V
PAP	A phase pulse waveform	Duty 50% (ON/ OFF ratio)
PBP	B phase pulse waveform	Duty 50% (ON/ OFF ratio)
TSA	Speed feedback signal	±10V at rated max. speed of motor (CW:+,CCW:–)
TS2	Low–speed detection signal	Adjustment of each model by RV6
TS3	Speed pulse F/V conversion signal	At CCW (forwar rotation) 6000rpm, –4.65 to –6.15V
VCMD	Speed command voltage	0～±10V,(CCW:+, CW: –)
FWP	CCW rotation pulse	Pulse width=3.2µs, occurs only at CCW (forward rotation)
RVP	CW rotation pulse	Pulse width=3.2µs, occurs only at CW (backward rotation)
ER	Error voltage	–4.2 to +4.8V
CLK1	Clock signal	2. 5MHz, duty 50%
SLIP	Slip pulse	
VDC	DC link voltage signal	Voltage 1/100 of DC link voltage
DTDC	DC form voltage of input AC voltage	Voltage 1/100 of DC form voltage of input AC voltage
IU	U–phase current detection signal	22.2 A/V
IV	V–phase current detection signal	
IW	W–phase current detection signal	
+24V	+24V DC voltage	About 23V ±4%
+15V	+15V DC voltage	+15V±4%
+5V	+5V DC voltage	+5V±4%
–15V	–15V DC voltage	–15V±4%
0V		
SM	Speed meter signal	At maximum rated max. rotation +10V
LM	Loadmeter signal	At maximum rated max. output +10V

7.2.2 Models 6S to 26S (Amp. specification: A06B–6059–H2xx)

Name	Signal contents	Remarks
DA2	Analog speed command voltage (SVC)	0～+10V, Rated speed at 10V
PA	Pulse generator output A–phase	90, advance by PB at CW rotation V_{p-p}=0.36–0.5V
PB	Pulse generator output B–phase	90,delay by PA at CW rotation V_{p-p}=0.36–0.5V
RA	A–phase standard voltage	+2. 5V DC ±0. 2V
RB	B–phase standard voltage	+2. 5V DC ±0. 2V
PAP	A phase pulse waveform	Duty 50% (ON/ OFF ratio)
PBP	B phase pulse waveform	Duty 50% (ON/ OFF ratio)
TSA	Speed feedback signal	At maximum rated max. rotation ±10V(CW:+,CCW:–)
TS2	Low–speed detection signal	At CCW (forward rotation) 22.5rpm , –1.4V±0.3V
TS3	Speed pulse F/V converison signal	At CCW (forward rotation) 6000 rpm , –4.65 to –6.15V
VCMD	Speed command voltage	0～±10V, (CCW:+, CW: –)
TSAF	CCW rotation speed detection signal	At CCW (forward rotation) 6000 rpm , 0. 82V ±82mv
TSAR	CW rotation speed detection signal	At CW (backward rotation) 6000 rpm , 0. 82V ±82mv
ER	Error voltage	–4.2～+4.8V
CLK1	Clock signal	2. 5MHz , duty 50%
SLIP	Slip pulse	
VDC	DC link voltage signal	Voltage 1/100 of DC link voltage
SDC	Control power DC link voltage	Voltage 1/100 of control power DC link voltage
ADIN	A/D converter input signal	
IU	U–phase current detection signal	<table><tr><td>Model</td><td>6S～12S</td><td>15S～22S</td><td>26S</td></tr><tr><td>Current value</td><td>33.3 A/V</td><td>66.6 A/V</td><td>83.3 A/V</td></tr></table>
IV	V–phase current detection signal	
IW	W–phase current detection signal	
+24V	+24V DC voltage	About 23V ±4%
+15V	+15V DC voltage	+15V±4%
+5V	+5V DC voltage	+5V±4%
–15V	–15V DC voltage	–15V±4%
0V		
*RGHLD	Regenerative stop signal	

7.2.3 Test Points Signal Waveform

Check terminal	Waveform	Remarks
DA2	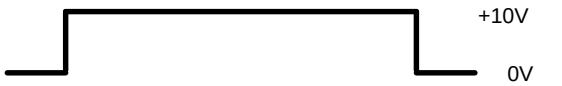	+10V at maximum rated rotation (0V at 0 rpm)
VCMD	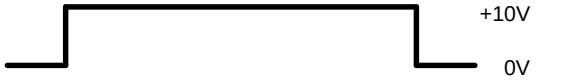	At CCW (Minus for reverse rotation)
TSA		Speed feedback voltage (Pulse for reverse rotation)
TS3		F/V converter output (Pluse for reverse rotation)
ER	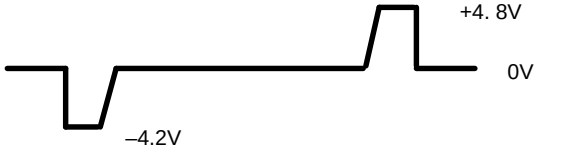	Velocity deviation voltage
PA PB	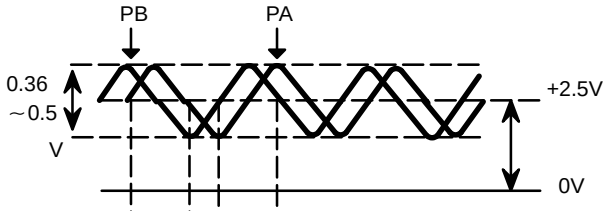	Pulse generator output Phase difference between PA and PB is 90,.
RA RB	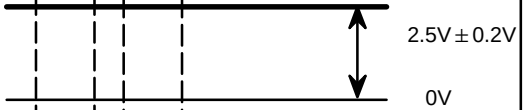	Nominal voltage
PAP		
PBP	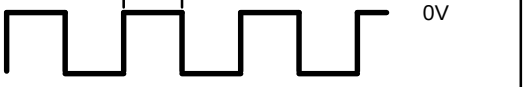	Signal formed by PA/PB
IU	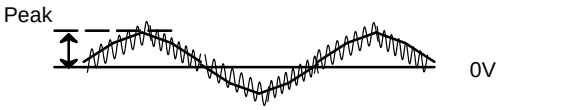	Current feedback signal of each phase
IV	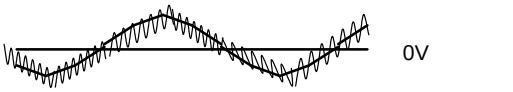	
IW	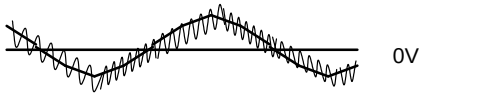	Peak value is proportional to current value
CLK1	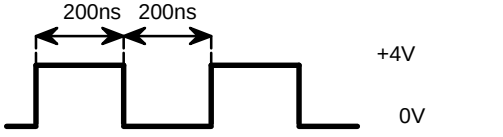	Clock 2. 5MHz

7.3 SETTING PARAMETERS (DIGITAL AC SPINDLE)

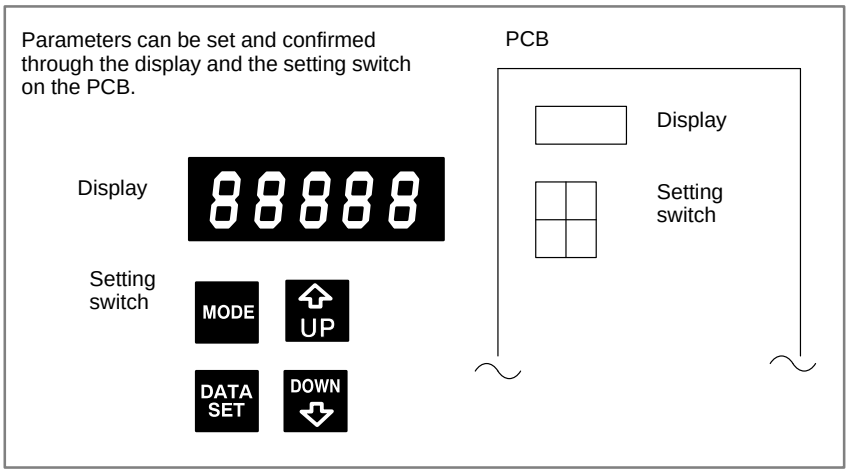

1. If the PCB is mounted a jumper SH, set it to SET.
2. Press the setting switch [MODE], [DATA SET], [⇑ UP] and [DOWN ⇓] at the same time for more than 1 second and when the display shows FFFFF, release the buttons.
3. Press the [MODE] button and a parameter (mode) no. is displayed.
4. Press and hold the [MODE] button and press the [⇑ UP] or [DOWN ⇓] button, then the number increases or decreases by 1.
5. Value of parameter is shown on the display in 4 digits about 0.5 second after the [MODE] button is released.
6. Value of parameter increases by one by [⇑ UP] button and decreases by one by [DOWN ⇓] button.
7. Perform the same operation for another parameters.
8. Press [DATA SET] button at last.
   When the display shows 88888, the setting value is stored in memory.

   * If you turn off power before pressing [DATA SET] button, the values of parameters return to the previous values.

7.4 SETTING STANDARD PARAMETERS

The standard parameters are stored in ROM. If the parameter list attached to the machine is lost or when an accident occurs and no parameter can be set, perform the setting of standard parameters.
Also when a ROM is replaced with different maximum speed applied to different motor model, perform the following procedure.
However, since the standard parameters are set to each motor, some parameters must be modified by the parameter list according to the machine's unique characteristics.

1. Turn off power.
2. Set jumper S1 on the PCB to TEST.
3. If the PCB is provided with jumper SH, set it to SET.
4. Turn on power and confirm that display shows 00000, 11111, ..., and FFFFF repeatedly.
5. Press the setting switch [MODE], [DATA SET], [⇑ UP] and [DOWN ⇓] at the same time for more than 1 second and when the display shows FFFFF, release the buttons.
6. Press the [MODE] button and the display shows FC–00.
7. Press and hold the [MODE] button and press [DOWN ⇓] button to display FC–22 on the display and release the [MODE] button. (Display changes to that of step 4)
   Other number shows other meaning, therefore select the number correctly.
8. Press [DATA SET] button more than one second.
9. When the display shows GOOD, the standard parameters have been set correctly.
10. Turn power off and set jumper S1 and SH to the DRIVE side.
11. Modify the standard parameters those are specific to the machine or the PCB as required. Refer to 7.6 "Tuning after replacing PCB".

7.5 LIST OF PARAMETER

<table>
<tr><th></th><th>No.</th><th>Contents</th><th>Setting value</th></tr>
<tr><td></td><td>F–00</td><td>The speed of the motor is displayed. (rpm)</td><td></td></tr>
<tr><td></td><td>F–01</td><td>Machine ready signal (MRDY) is 0: not used 1: used</td><td></td></tr>
<tr><td>*</td><td>F–02</td><td>Spindle speed override is 0: not used 1: used</td><td></td></tr>
<tr><td>*</td><td>F–03</td><td>Upper limit of speed override is 0: 100% 1: 120%</td><td></td></tr>
<tr><td></td><td>F–04</td><td>none</td><td></td></tr>
<tr><td>*</td><td>F–05</td><td>Setting of maximum speed

Standard : 256p/ rev (Detector I)
High–speed : 128p/ rev (Detector II)

<table><tr><th></th><th>Standard</th><th>High–speed</th></tr><tr><td>0</td><td>Max. 5000</td><td>Max. 10000</td></tr><tr><td>1</td><td>Max. 6000</td><td>Max.12000</td></tr><tr><td>2</td><td></td><td>Max. 15000</td></tr><tr><td>3</td><td></td><td>Max. 20000</td></tr></table></td><td></td></tr>
<tr><td></td><td>F–06</td><td>Setting of output limit pattern

<table><tr><th>Pattern 1</th><th>Pattern 2</th><th>Content</th></tr><tr><td>0</td><td>0</td><td>The output is not limit</td></tr><tr><td>1</td><td>4</td><td>Limited at acc./dec. time</td></tr><tr><td>2</td><td>5</td><td>Limited under normal operation</td></tr><tr><td>3</td><td>6</td><td>Limited under all operation</td></tr></table>
 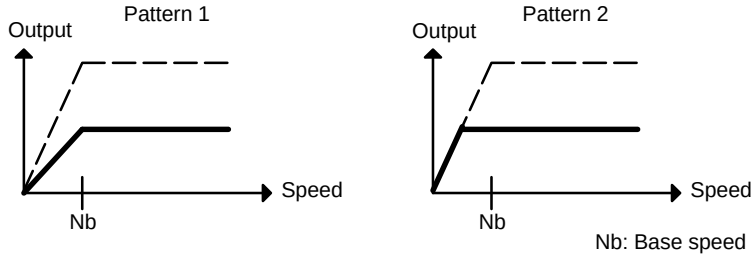 </td><td></td></tr>
<tr><td></td><td>F–07</td><td>Limit value at output limited (The max. rated output is 100)</td><td></td></tr>
<tr><td></td><td>F–08</td><td>Delay time to motor power interruption (Standard setting × 40msec)</td><td></td></tr>
<tr><td></td><td>F–09</td><td>Excitation interruption of motor power using MRDY signal is
0: not used 1: used</td><td></td></tr>
<tr><td></td><td>F–10</td><td>Adjustment of speed error offset at the time of the forward rotation command</td><td></td></tr>
<tr><td></td><td>F–11</td><td>Adjustment of speed error offset at the time of the reverse rotation command</td><td></td></tr>
<tr><td></td><td>F–12</td><td>Adjustment of speed error offset at the time of the orientation command</td><td></td></tr>
<tr><td>*</td><td>F–13</td><td>Speed at forward rotation command (Model 1S ∽ 3S is RV1)</td><td></td></tr>
</table>

Parameters marked with *does not exist in models 1S to 3S.

	No.	Contents	Setting value
*	F–14	Speed at reverse rotation command (Refer to RV2 for Models 1S to 3S)	
	F–15	Motor peed when spindle speed command voltage is 10V (Setting value=Speed/100)	
	F–16	Detection range of speed arrival signal(SAR) (Detection range=command speed × setting value %)	
	F–17	Detection range of speed detecting signal (SDT) (Maximum speed) × (Setting data %)	
	F–18	Torque limit value when the torque limit signal (TLMH) is turned on	
	F–19	Acceleration /deceleration time (Setting value=(Acceleration time [sec]) × 2)	
	F–20	Limit of regenerative power	
	F–21	Speed control phase compensation P : HIGH gear (CTH=1)	
	F–22	Speed control phase compensation P : LOW gear (CTH=0)	
	F–23	Speed control phase compensation P in orientation : HIGH gear (CTH=1)	
	F–24	Speed control phase compensation P in orientation : LOW gear (CTH=0)	
	F–25	Speed control phase compensation I : HIGH gear (CTH=1)	
	F–26	Speed control phase compensation I : LOW gear (CTH=0)	
	F–27	Speed control phase compensation I in orientation : HIGH gear (CTH=1)	
	F–28	Speed control phase compensation I in orientation : LOW gear (CTH=0)	
*	F–29	Speed detection offset (Refer to RV3 for models 1S to 3S)	
	F–30	Display of motor speed (value is 1 when rigid tapping is used)	
	F–31	Setting of rigid tap mode	
	F–32	Motor voltage at normal operation	
	F–33	Motor voltage in orientation	
	F–34	Motor voltage in rigid tap mode	
	F–35	Setting of detection ragne of zero–speed signal (SST) (The detection range=(maximum speed) × (The setting data/100))	
	F–36	Detection range of load detection signal (LDT)	
*	F–37	Time constant of torque deviation at deceleration start	
	F–38	Characteristics of control in deceleration (When the gear noises at deceleration, set the data to 1)	
	F–39	Characteristics of control in stable rotation with no load (When the motor speed may undulate in the stable rotation , set the data to 1)	
	F–40	Characteristics of control in torque limitation (When using mechanical orientation)	

Parameters marked with * does not exist in models 1S to 3S.

Following are the parameters relating to the motor characteristics.
Therefore, do not change the settings.
If you changed these parameter, perform the standard setting of the parameters.

No.	Content	Setting value
F–41	Current loop I gain	
F–42	Slip compensation constant	
F–43	Slip constant	
F–44	Voltage compensation	
F–45	PWM maximum amplitude	
F–46	Second current command	
F–47	Current assumed constant	
F–48	Fixed torque point	
F–49	Excitation weak point	
F–50	Voltage conversion constant	
F–51	Selection of speed detector	
F–52	Current conversion constant	
F–53	Current loop P gain	

7.6 TUNING AFTER REPLACING PCB (S SERIES AC SPINDLE)

1. Set jumpers on the PCB to the previous satate.
2. Check whether ROM is mounted or not and confirm version of ROM. If ROM is not mounted or ROM series is different, remove the ROM from the old PCB and mount it on new PCB.
3. Install the PCB to the unit and set the system to the emergency stop state. Then turn on power and measure voltage on the PCB.

Test points	Rating
+24V	About 23V ±4%
+15V	+15V ±4%
+5V	+5V ±2%
–15V	–15V ±2%

4. If the PCB mounts jumper SH, set it to SET.
   (Depending on version of PCB, there is no jumper SH.)
5. Confirm that jumper S1 is set to DRIVE and turn on power.
6. Press [MODE], [DATA SET], [⇑ UP] and [DOWN ⇓] buttons at the same time for more than one second to enable writing parameters.
   When the display shows [FFFFF], it is a state that parameters can be written.
7. Set parameters according to the parameter list attached to the machine.
   1) When you press and hold [MODE] button and press [⇑ UP] or [DOWN ⇓] key, you can change parameter number.
   2) When you press [⇑ UP] or [DOWN ⇓] key without pressing [MODE] key, you can change the values of parameters.
8. After you have completed the setting of parameters, release the emergency stop, rotate the spindle at a low speed to see whether problem does not occur.
   * At first, check from low speed to midium speed.
   * You should be ready to press the emergency stop button to escape from accidental problem.
9. Turn off rotation commands to make fine adjustment of the PCB.
   The PCB for model 1S to 3S mounts the following volumes.

RV1	Adjusting forward rotation speed	Used for fine adjustment of max. speed
RV2	Adjusting reverse rotation speed	
RV3	Adjusting velocity detection circuit offset	Set check terminal TS3 to 0mV at stop.
RV4	Adjusting +5V	Adjust +5V ± 0.1V
RV5	Gain when changing a gain	Standard setting 50 %
RV6	Velocity detection circuit gain at low speed	Do not change setting

10. Measure test point TS3 with a digital tester and adjust parameter F–29 so that it becomes 0mV at a stop state.
    Adjust this item with volume RV3(velocity detection circuit offset adjustment) on the PCB for models 1S to 3S.
11. Execute spindle speed command S0 and spindle forward command M03. Tune offset speed by parameter F–10 so that the spindle does not rotate by M03. In some machines, rotational direction of motor and M03 are reverse. Therefore, if motor speed does not change with M03, command M04.
12. Execute spindle speed command S0 and spindle reverse command M04. Tune offset speed by parameter F–11 so that the spindle does not rotate by M04.
13. When the orientation function is equipped, execute orientation command M19 or perform orientation by a manual operation.
    Tune F–12 so that INPOS–FINE (magnetic sensor method) or INPOS–ADJUST(position coder method) is lit when an orientation completes.
14. Tune F–12 so that motor speed becomes that specified by a command duning forward rotation.
    * When you halt the setting switch operations, the display shows 5–digit motor speed in a few seconds and you confirm the speed.
    For model 1S to 3S, tune this item by volume RV1 (forward rotation speed adjustment) on the PCB.
15. Tune F–14 so that motor speed becomes that specified by a command during reverse rotation.
    For model 1S to 3S, tune this item by volume RV2 (reverse rotation speed adjustment) on the PCB.
16. Press DATA SET button for more than one second to memorize parameters.When they are memorized, the display shows 88888.
    Note 1)If you turn off power without pressing DATA SET button, the parameters become invalid.

Note
This operation cannot be accepted when a rotation command is specified.
Always perform this operation with the spindle stopped.

17. Turn off the power and return jumper S1 and SH to DRIVE.

8 TROUBLESHOOTING

This chapter describes troubleshooting procedure. If your system employs FANUC CONTROL MOTOR α series, also refer to its manuals listed in preface of this manual.

8.1 CORRECTIVE ACTION FOR FAILURES 296
8.2 POWER CANNOT BE TURNED ON 298
8.3 NO MANUAL OPERATION NOR AUTOMATIC OPERATION CAN BE EXECUTED 301
8.4 JOG OPERATION CANNOT BE DONE 305
8.5 HANDLE OPERATION CANNOT BE DONE 309
8.6 AUTOMATIC OPERATION CANNOT BE DONE 312
8.7 CYCLE START LED SIGNAL HAS TURNED OFF 321
8.8 NOTHING IS DISPLAYED ON CRT 323
8.9 ALARM 85 TO 87 (READER/PUNCHER INTERFACEALARM) 326
8.10 REFERENCE POSITION DEVIATES 335
8.11 ALARM 90 (REFERENCE POSITION RETURN IS ABNORMAL) 336
8.12 ALARM 300 (REQUEST FOR REFERENCE POSITION RETURN) 338
8.13 ALARM 301 TO 305 (ABSOLUTE PULSE CODER IS FAULTY) 339
8.14 ALARM 306 TO 308 (ABSOLUTE PULSE CODER BATTERY IS LOW) 342
8.15 ALARM 350 (SERIAL PULSE CODER IS ABNORMAL) 343
8.16 ALARM 351 (SERIAL PULSE CODER COMMUNICATION IS ABNORMAL) 344
8.17 ALARM 400 (OVERLOAD) 345
8.18 ALARM 401 (*DRDY SIGNAL TURNED OFF) .. 347
8.19 ALARM 404 and 405 (*DRDY SIGNAL TURNED ON) 349
8.20 ALARM 410 (EXCESSIVE POSITION ERROR AMOUNT DURING STOP) 350

8.21 ALARM 411 (EXCESSIVE POSITION ERROR DURING MOVE) 351
8.22 ALARM 414 (DIGITAL SERVO SYSTEM IS ABNORMAL) 353
8.23 ALARM 416 (DISCONNECTION ALARM) 365
8.24 ALARM 417 (DIGITAL SERVO SYSTEM IS ABNORMAL) 366
8.25 ALARM 700 (OVERHEAT AT CONTROL SIDE) . 367
8.26 ALARM 704 (SPINDLE SPEED FLUCTUATION DETECTION ALARM) 368
8.27 ALARM 749 (SERIAL SPINDLE COMMUNICATION ERROR) 369
8.28 ALARM 750 (SPINDLE SERIAL LINK CANNOT BE STARTED) 372
8.29 ALARM 751,761 (SPINDLE ALARM) 377
8.30 ALARM 900 (ROM PARITY ERROR) 378
8.31 ALARM 910 TO 915 (SRAM PARITY) 381
8.32 ALARM 916 (DRAM PARITY ERROR) 384
8.33 ALARM 920 TO 923 (WATCH DOG OR RAM PARITY) 386
8.34 ALARM 924 (SERVO MODULE MOUNTING ERROR) 390
8.35 ALARM 930 (CPU ERROR) 391
8.36 ALARM 950 (PMC SYSTEM ALARM) 392
8.37 ALARM 951 (PMC–RC WATCH DOG ALARM) . 394
8.38 ALARM 970 (NMI ALARM IN PMC CONTROL MODULE) 395
8.39 ALARM 971 (NMI ALARM IN SLC) 397
8.40 ALARM 972 (NMI ALARM) 398
8.41 ALARM 973 (NMI ALARM BY UNKNOWN CAUSE) 399

8.1 CORRECTIVE ACTION FOR FAILURES

When a failure occurs, it is important to correctly grasp what kind of failure occured and take appropriate action, to promptly recover the machine.
Check for the failure according to the following procedure :

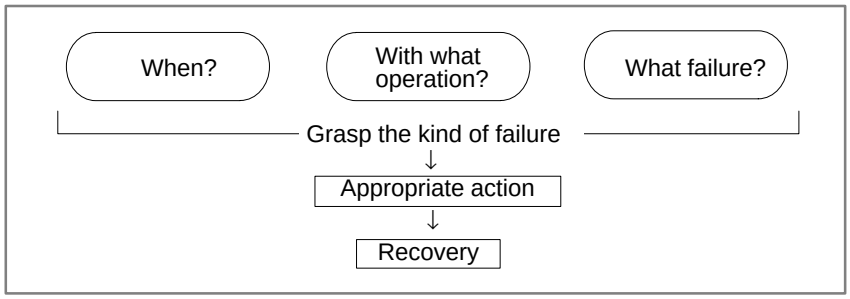

8.1.1 Investigating the Conditions under which Failure Occurred

(1) When and how many times (frequency of occurrences)
(2) With what operation
(3) What failure occurred

1 When did the failure occur?

Date and time?
Occurred during operation? (how long was the operation?)
Occurred when the power was turned on?
Was there any lightening surge, power failure, or other disturbances to the power supply?
How many times has it occurred
Only once?
Occurred many times ? (How many times per hour, per day, or per month?)

2 With what operation did it occur ?

What was the NC mode when the failure occurred?
Jog mode/memory operation mode /MDI mode /reference position return mode
If during program operation,

1) Where in the program ?
2) Which program No. and sequence No. ?
3) What program ?
4) Occurred during axial movement ?
5) Occurred during the execution of an M/S/T code ?
6) Failure specific to the program ?

Does the same operation cause the same failure ?
(Check the repeatability of the failure.)
Occurred during data input/output ?

<Feed axes and spindles>
For a failure related to feed axis servo

1) Occurred at both low feedrate and high feedrate ?
2) Ocurred only for a certain axis ?

For a failure related to spindles
When did the failure occur ? (during power–on, acceleration, deceleration, or constant rotation)

3 What failure occurred ?

Which alarm was displayed on the alarm display screen on the CRT? (Check the axis along which an alarm has occurred for alarms 300 to 599.)

For alarm 350 : Examine diagnostic 202

For alarm 351 : Examine diagnostic 203

For alarm 414 : What does diagnostic display 200,201,204 indicate ?

For alarm 751 or 761 : Which spindle alarm is indicated ?

(indicated by AL–XX (XX is a number))
Is the CRT screen correct ?
If machining dimensions are incorrect

1) How large is the error ?
2) Is the position display on the CRT correct ?
3) Are the offsets correct ?

4 Other information

- Is there noise origin around machine?
  If the failure has not occurred frequently, the cause may be external noise to the power supply or inductive noise on machinery cables. Operate other machines connected to the same power line and see if noise come from the relays or compressors.
- Is it taken any countermeasure for noise in machine side?
- Check the following for the input power supply voltage :
  1) Is there variation in the voltage ?
  2) Are the voltages different depending on the phase ?
  3) Is the standard voltage supplied ?
- How high is the ambient temperature of the control unit?
  (0°C to 45°C during operation)
  Refer to manual about noise.
- Has excessive vibration been applied to the control unit?
  (0.5 G or less during operation)

5 When you contact our service center, specify the following items :

1) Name of the NC unit
2) Name of the machine tool builder and type of machine
3) Software series/version of the NC
4) Specifications of the servo amplifier and motor
   (for a failure related to the servo)
5) Specifications of the spindle amplifier and spindle motor
   (for a failure related to a spindle)

   See the drawing issued by the machine tool builder for the locations of the NC unit and servo/spindle amplifiers.

   We use the following specification codes :
   Servo /spindle amplifier : A06B–□□□□–H□□□
   Servo/spindle amplifier : A06B–□□□□–B□□□
   (□ represents a number)

8.2 POWER CANNOT BE TURNED ON

Points

Confirm the green LED PIL and red LED ALM on the front of power unit.

1) Proceed to item 1 when green LED PIL is turned off.
2) Proceed to item 2 when green LED is lit and red LED AML is turned off.
3) Check item 3 when red LED ALM is lit.

Causes and Remedies

1 LED is turned off

(1) Fuse F1 or F2 on the power unit front panel is blown.

(a) Input power voltage is too high.

(b) Power unit is faulty.

(2) Input voltage is low

Measure voltage at R and S terminals of connector CPI to confirm appropriate voltage is supplied.
If it is not normal, check machine side magnetics circuit.

200VAC, +10%,	50/ 60Hz,	±1Hz, 1ϕ
220VAC, +10%,	60Hz,	±1Hz, 1ϕ

(3) Power supply unit is faulty.

2 Conditions for power on are not satisfied.(PIL is lit and ALM is off)

Conditions for power on are as follows:

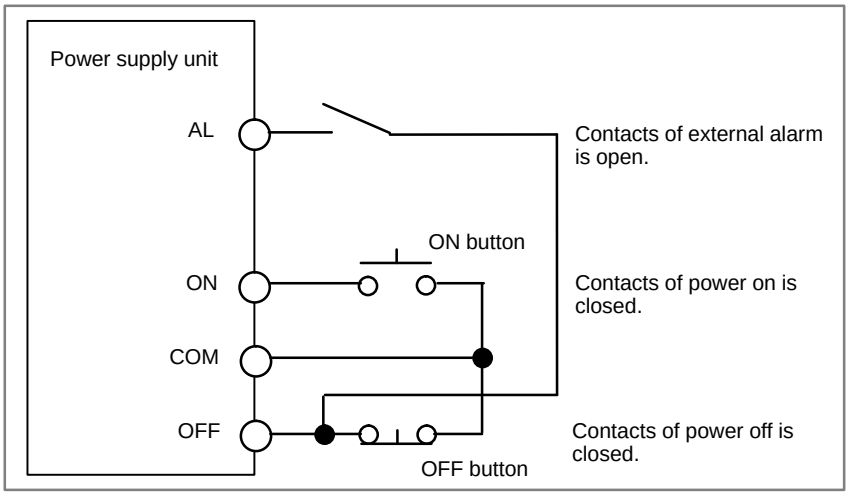

For details, refer to **2.5.1 Power Supply Unit**.

3 LED ALM is lit

(1) Fuse F3 is blown on the front panel of power unit

Check whether +24V is short–circuited or grounded. (See figure below).

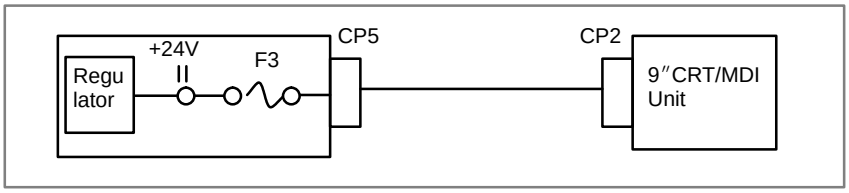

For details, refer to 2.4.
9″CRT unit is faulty.

(2) Power supply unit is faulty.

(a) Remove connector CP2, CP3, CP5, and CP6.

(b) Turn off the power of the machine and retract the power unit from the controller.

(c) Turn on power of NC.

(d) When LED ALM is lit, power unit is faulty.
If ALM is not lit, power supply unit is normal.

Note
When a work is conducted with power supply unit removed, perform the work within 30 minutes (Data in memory may be lost)

(3) Load (+5V) is grounded or short–circuited

(a) With power supply unit installed on the control unit, turn off the power on the machine side.

(b) Remove cables (1) to (3) in the figure below, turn on power of NC and check LED ALM.

Note
To release lightening of ALM, turn off NC power.

(c) When LED ALM is turned off while removing the cable, the load connected by the removed wire may be faulty.

Notes
When removing the cable note the following :
1 If 6V battery is connected as shown below, absolute position of the machine may be lost when cable (2)is removed. Therefore, the machine position must be established by reference position return ,after releasing the alarm.
2 If 6V battery is not connected, the above operation is not needed.

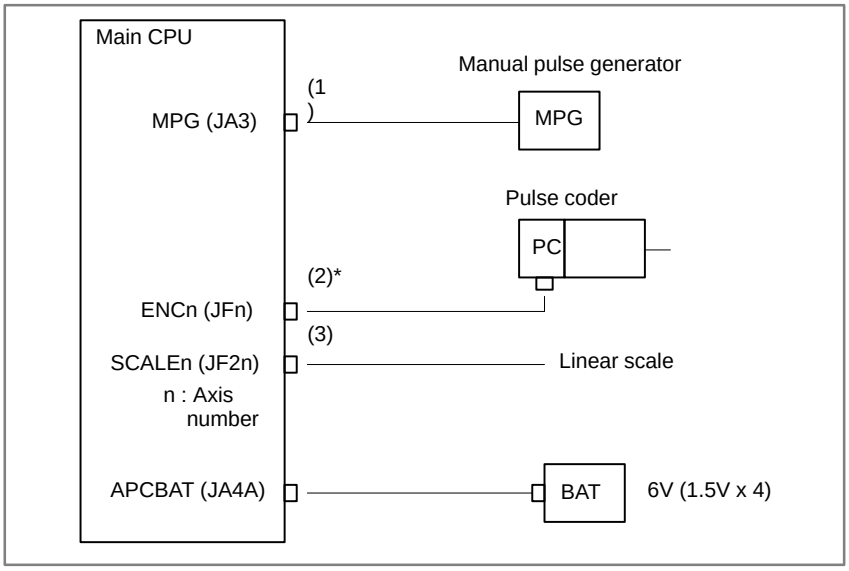

(d) If AlM does not light by power on of NC, any of load connected to (1) to (3) may be faulty. Check whether grounding or short–circuiting exists or not. If it is present, replace the appropriate part or cable.

(4) Short–circuiting within the controller (PCB may be faulty)

Power is supplied to PCBs through the back panel.
Check it by the steps below :

1) Remove a PCB in a slot and turn on power, then confirm lightening of LED ALM. Repeat this operation to each PCB.
2) When ALM does not light at power on with a PCB removed, the PCB may be faulty.

Note
Perform an operation with a PCB removed within 30 minutes, otherwise data in memory may be lost.

8.3 NO MANUAL OPERATION NOR AUTOMATIC OPERATION CAN BE EXECUTED

Points

(1) Execute the following procedure when no manual nor automatic operation is done

(2) Check whether position display shows correct position

(3) Check CNC status display

(4) Check CNC internal status using diagnostic function

Causes and Countermeasures

1. Position display (relative, absolute, machine coordinate) does not change

(1) Check CNC status display (Refer to **2.10 NC STATUS DISPLAY FOR DETAIL**)

(a) Emergency stop status (Emergency stop signal is turned on)

If status display shows EMG the emergency stop signal is input.

Check the following signal using the PMC's diagnostic function (PMCDGN).

1 When built–in I/O card is used.

	#7	#6	#5	#4	#3	#2	#1	#0
X1008				*ESP				
G0008				*ESP				

ESP=0 indicates that emergency stop signal is input.

2 When built–in I/O card is not used.

	#7	#6	#5	#4	#3	#2	#1	#0
X1008				*ESP				
G0008				*ESP				

ESP=0 indicates that emergency stop signal is input.

(b) It is a reset status

When RESET is displayed, any of a reset is functioned. Check the following signal using the PMC's diagnostic funciton (PMCDGN).

1 An input signal from the PMC functions

	#7	#6	#5	#4	#3	#2	#1	#0
G0008	ERS	RRW						

When ERS is 1, external reset signal is input.
When RRW is 1, reset & rewing signal is input.

2 RESET key on the MDI keyboard functions

When the signals in (1) are 0, RESET key may be functioning.

Check the contact of RESET key using a tester.

When it is abnormal, change the keyboard.

(c) Confirm the status of modes

Operation mode status is displayed on the lower part of CRT as follows :
If nothing is displayed, mode select signal is not input. Check mode select signal using PMC's diagnostic function (PMCDGN).
For details, refer to section **1.7 STATUS DISPLAY**.

(Example of display)

JOG : Manual operation (JOG) mode
HND : Manual handle (MPG) mode
MDI : Manual data input (MDI) mode
MEM : Automatic operation (Memory) mode
EDIT: EDIT (Memory edit) mode

<Mode select signal>

	#7	#6	#5	#4	#3	#2	#1	#0
G0043						MD4	MD2	MD1
						↓	↓	↓
Manual operation (JOG) mode						1	0	1
Manual handle (MPG) mode						1	0	0
Manual data input (MDI) mode						0	0	0
Automatic operation (Memory) mode						0	0	1
EDIT (Memory edit) mode						0	1	1

(2) Check diagnostic data 000 to 025 of the CNC Check an item for which 1 is displayed

	No.	Message	Display
	000	WAITING FOR FIN SIGNAL	: 0
	001	MOTION	: 0
	002	DWELL	: 0
a.	003	IN–POSITION CHECK	: 0
	004	FEEDRATE OVERRIDE 0%	: 0
b.	005	INTERLOCK / START LOCK	: 1
	006	SPINDLE SPEED ARRIVAL CHECK (Example)	: 0
	010	PUNCHING	: 0
	011	READING	: 0
	012	WAITING FOR (UN) CLAMP	: 0
c.	013	JOG FEEDRATE OVERRIDE 0%	: 0
d.	014	WAITING FOR RESET, ESP, RRW OFF	: 0
	015	EXTERNAL PROGRAM NUMBER SEARCH	: 0

Items with a to d relate with manual and automatic operation and its detail is shown below.

a. In–position check is being done

It shows that positioning is not yet completed. Check the contents of the following diagnostic number. (It is 1 in the following condition)

DGN 0300 [Position Error] >PARAM 1826
[In–positio width]

1 Check the parameters according to the parameter list

1825	Servo loop gain per axis (Normal : 3000)

2 Servo system may be abnormal. Refer to servo alarm 400, 410, and 411.

b. Interlock or start lock signal is input

There are a plural interlock signals. Check at first which interlock signal is used by the machine tool builder at the parameters shown below.

	#7	#6	#5	#4	#3	#2	#1	#0
3003					DIT	ITX		ITL

#0 ITL=0 shows interlock signal *IT is effective. To (1)
#2 ITX=0 shows interlock signal *ITn is effective. To (2)
#3 DIT=0 shows interlock signal ±MITn is effective. To (3)
Check state of effective interlock signals using the diagnostic function (PMCDGN) of the PMC.

1 Interlock signal (*IT) is input

	#7	#6	#5	#4	#3	#2	#1	#0
G0008								*IT

*IT=0 shows that interlock signal is input.

2 Axis interlock signal (*ITn) is input

	#7	#6	#5	#4	#3	#2	#1	#0
G0130	*IT8	*IT7	*IT6	*IT5	*IT4	*IT3	*IT2	+IT1

*ITn=0 shows interlock signal is input.

3 Interlock signal per axis and direction (+/– MITn) is input

	#7	#6	#5	#4	#3	#2	#1	#0
G0132					+MIT4	+MIT3	+MIT2	+MIT1
G0134					–MIT4	–MIT3	–MIT2	–MIT1

±MITn=1 shows interlock signal per axis and direction is input.

c. Jog feedrate override is 0%

Check the signals using PMC's diagnostic function (PMCDGN)

	#7	#6	#5	#4	#3	#2	#1	#0
G0010	*JV7	*JV6	*JV5	*JV4	*JV3	*JV2	*JV1	*JV0
G0011	*JV15	*JV14	*JV13	*JV12	*JV11	*JV10	*JV9	*JV8

When the override is 0% all bits of the above address becomes
1111 . . . . 1111 or 0000 . . . . . 0000.

*JV15 . . . . . JV0	Override
1111 1111 1111 1111	0.00%
1111 1111 1111 1110	0.01%
:	:
1101 1000 1110 1111	100.00%
:	:
0000 0000 0000 0001	655.34%
0000 0000 0000 0000	0.00%

d. NC is in a reset state

In this case, RESET is also displayed on the status display. Check it using the procedure of 1 above.

2. When machine coordinate value does not update on position display

(1) Machine lock signal (MLK) is input.

	#7	#6	#5	#4	#3	#2	#1	#0
G0044							MLK	
G0108	MLK8	MLK7	MLK6	MLK5	MLK4	MLK3	MLK2	MLK1

MLK : All axes machine lock

MLKn : Each axis machine lock

When the signal is 1, the corresponding machine lock signal is input.

8.4 JOG OPERATION CANNOT BE DONE

Points

(1) Check whether position display is operating.
(2) Check CNC status display
(3) Check internal status using Diagnostic funciton

Causes and Remedies

1. Position display (relative, absolute, machine cooordinate) does not change

(1) Check mode selection status (JOG mode is not selected)

When status display shows JOG, it is normal.
When status display does not show JOG, mode select signal is not selected correctly. Confirm the mode select signal using PMC's diagnostic function (PMCDGN).

<Mode select signal>

	#7	#6	#5	#4	#3	#2	#1	#0
G0043						MD4	MD2	MD1
						↓	↓	↓
	Manual operation (JOG) mode					1	0	1

(2) Feed axis and direction select signal is not input Check the signal using PMC's diagnostic function (PMCDGN).

	#7	#6	#5	#4	#3	#2	#1	#0
G0100	+J8	+J7	+J6	+J5	+J4	+J3	+J2	+J1
G0102	–J8	–J7	–J6	–J5	–J4	–J3	–J2	–J1

Example)
When +X button is pressed on the operator's panel, signal+J1 turns to 1.
This signal is effected at its rise. If axis selection signal is input before JOG mode is selected, axis movement does not occur. Turn the signal to off, then on.

(3) Check CNC's diagnostic function 000 to 015. Check the items for which 1 is displayed at right side.

	No.	Message	Display
	000	WAITING FOR FIN SIGNAL	: 0
	001	MOTION	: 0
	002	DWELL	: 0
a.	003	IN–POSITION CHECK	: 0
	004	FEEDRATE OVERRIDE 0%	: 0
b.	005	INTERLOCK / START LOCK (Example)	: 1
	006	SPINDLE SPEED ARRIVAL CHECK	: 0
	010	PUNCHING	: 0
	011	READING	: 0
	012	WAITING FOR (UN) CLAMP	: 0
c.	013	JOG FEEDRATE OVERRIDE 0%	: 0
d.	014	WAITING FOR RESET, ESP, RRW OFF	: 0
	015	EXTERNAL PROGRAM NUMBER SEARCH	: 0

Items with a to d relate with manual and automatic operation and its detail is shown below.

a. In–position check is being done

It shows that positioning is not yet completed. Check the contents of the following diagnostic number. (It is 1 in the following condition)

DGN 0300 [Position Error] >PARAM 1826 [In–positio width]

1 Check the parameters according to the parameter list

1825	Servo loop gain per axis (Normal : 3000)

2 Servo system may be abnormal. Refer to servo alarm 400, 410, and 411.

b. Interlock or start lock signal is input

There are a plural interlock signals. Check at first which interlock signal is used by the machine tool builder at the parameters shown below.

		#7	#6	#5	#4	#3	#2	#1	#0
PARAM	3003					DIT	ITX		ITL

#0 ITL=0 shows interlock signal *IT is effective. To (1)
#2 ITX=0 shows interlock signal *ITn is effective. To (2)
#3 DIT=0 shows interlock signal ±MITn is effective. To (3)
Check state of effective interlock signals using the diagnostic function (PMCDGN) of the PMC.

1 Interlock signal (*IT) is input

	#7	#6	#5	#4	#3	#2	#1	#0
G0008								*IT

*IT=0 shows that interlock signal is input.

2 Axis interlock signal (*ITn) is input

	#7	#6	#5	#4	#3	#2	#1	#0
G0130	*IT8	*IT7	*IT6	*IT5	*IT4	*IT3	*IT2	+IT1

*ITn=0 shows interlock signal is input.

3 Interlock signal per axis and direction (+/– MITn) is input

· M series

	#7	#6	#5	#4	#3	#2	#1	#0
G0132					+MIT4	+MIT3	+MIT2	+MIT1
G0134					–MIT4	–MIT3	–MIT2	–MIT1

· T series

When an I/O card is used

	#7	#6	#5	#4	#3	#2	#1	#0
X1004			–MIT2	+MIT2	–MIT1	+MIT1		

When no I/O card is used

	#7	#6	#5	#4	#3	#2	#1	#0
X0004			–MIT2	+MIT2	–MIT1	+MIT1		

±MITn=1 shows interlock signal per axis and direction is input.

* For the T series, ±MITn is valid only for manual operation.

c. Jog feedrate override is 0%

Check the signals using PMC's diagnostic function (PMCDGN)

	#7	#6	#5	#4	#3	#2	#1	#0
G0010	*JV7	*JV6	*JV5	*JV4	*JV3	*JV2	*JV1	*JV0
G0011	*JV15	*JV14	*JV13	*JV12	*JV11	*JV10	*JV9	*JV8

When the override is 0% all bits of the above address becomes 1111 . . . . 1111 or 0000 . . . . . 0000.

*JV15 . . . . . JV0	Override
1111 1111 1111 1111	0.00%
1111 1111 1111 1110	0.01%
:	:
1101 1000 1110 1111	100.00%
:	:
0000 0000 0000 0001	655.34%
0000 0000 0000 0000	0.00%

d. NC is in a reset state

In this case, RESET is also displayed on the status display. Check it using the procedure of 1 above.

(4) Jog feed rate setting (Parameter) is not correct

1423	Jog feedrate per axis

(5) Manual feed per revolution is selected (T series)

This funciton feeds an axis synchronized with spindle rotation and whether this function is used or not is selected by the following parameter:

	#7	#6	#5	#4	#3	#2	#1	#0
1402				JRV				

#4 (JRV) 0 : Jog feed is of feed per minute

1 : Jog feed is of feed per revolution

(a) When parameter JRV is set to 1, feed rate of the axis is calculated by synchronizing with rotation of the spindle. Therefore, rotate the spindle.

(b) If the axis does not move even when the spindle is rotated, check the detector of the spindle (position coder) and the cable between the position coder and the CNC if it is short–circuited or ungrounded.Refer to 2.4 for connection diagram.

8.5 HANDLE OPERATION CANNOT BE DONE

Points

(1) Check another manual operation (JOG) is accepted.

(2) Check CNC status display

Causes and Countermeasure

1 JOG operation is not acceptable, either

Consult with item 8.3 and 8.4.

2 When only handle operation (MPG) cannot be done

(1) Check CNC status display at lower left corner of the CRT

(Refer to **1.7 STATUS DISPLAY** for details)
When the status display shows HND, mode selection is correct.
If it is not HND, mode select signal is not input correctly. Check the mode select signal using the PMC's diagnostic function(PMCDGN).

	#7	#6	#5	#4	#3	#2	#1	#0
G0043						MD4	MD2	MD1
						↓	↓	↓
	Manuale handle mode					1	0	0

(2) Manual handle feed axis select signal is not input

Check the signals using PMC's diagnostic function (PMCDGN).

	#7	#6	#5	#4	#3	#2	#1	#0
G0018	HS2D	HS2C	HS2B	HS2A	HS1D	HS1C	HS1B	HS1A
G0019					HS3D	HS3C	HS3B	HS3A

When axis select switch for manual handle feed is selected on the machine operator's panel, if the signals are input as follows, it is normal.

Selected axis	HSnD	HSnC	HSnB	HSnA
no selection	0	0	0	0
1st axis	0	0	0	1
2nd axis	0	0	1	0
3rd axis	0	0	1	1
4th axis	0	1	0	0
5th axis	0	1	0	1
6th axis	0	1	1	0
7th axis	0	1	1	1
8th axis	1	0	0	0

In the above table, n is the number of the manual pulse generator (MPG) and up to 3 MPGs can be used.
A feed axis is selected by 4–bit code of A to D.

(3) Manual handle feed multiplication is not correct

Check the following signals using PMC's PCDGN. Also confirm the following parameters based on the parameter list.

	#7	#6	#5	#4	#3	#2	#1	#0
G0019			MP2	MP1				

↓ ↓

MP1	MP2	Multiplication
0	0	×1
0	1	×10
1	0	×m
1	1	×n

7113	Magnification of handle feed m(1 – 127)
7114	Magnification of handle feed n(1 – 1000)

	# 7	#6	#5	#4	#3	#2	#1	#0
7102								HNGx

#0(HNGx) Direction of MPG and travel of machine

0 : same direction

1 : reverse direction

7110	No. of MPGs used (1 – 3)

(4) Checking manual pulse generator

Check disconnection of cable or short circuit.

(a) Incorrect of cable

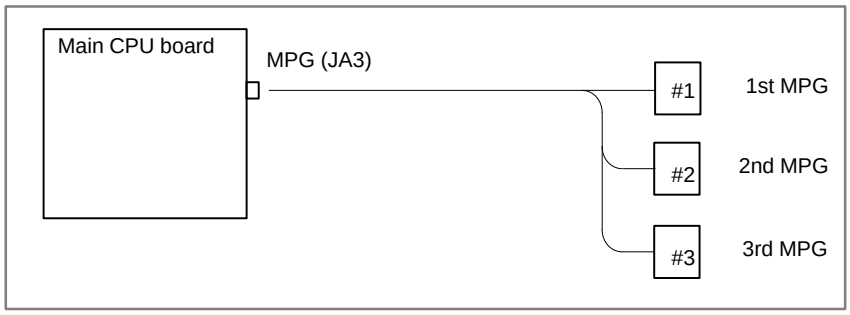

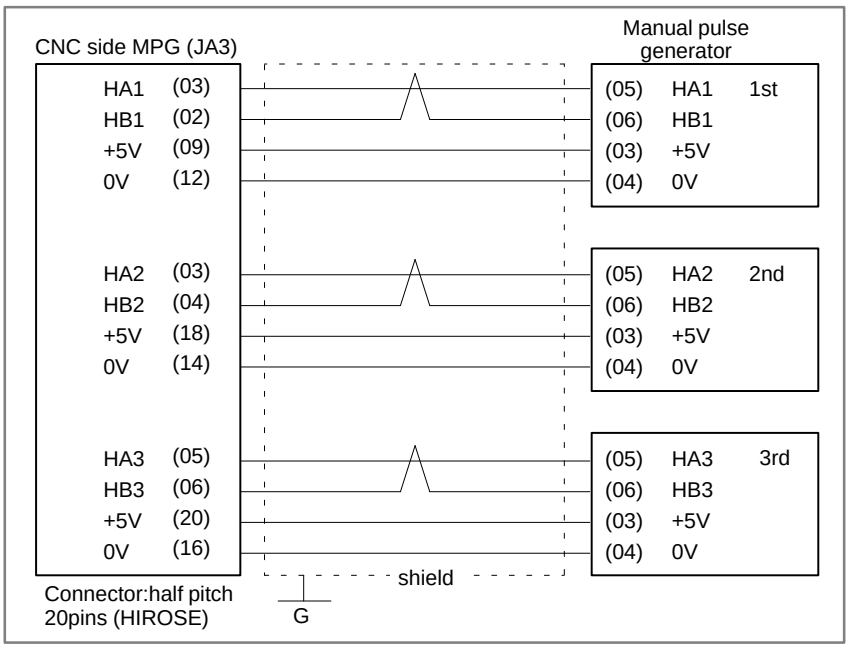

(b) Manual pulse generator is faulty

When you rotate the MPG, the following signal is output. Measure the signal with synchroscope at screw terminal on back of MPG. If no signal is output, measure +5V voltage.

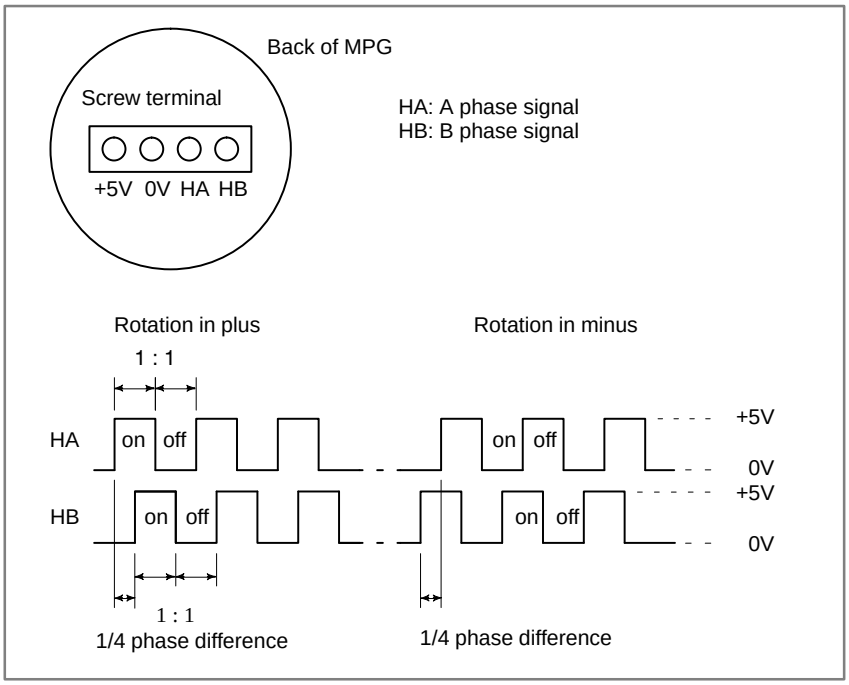

Check on and off ratio and phase difference of HA and HB.

8.6 AUTOMATIC OPERATION CANNOT BE DONE

Points

(1) Check manual operation is possible.

(2) Check the status of cycle start LED on machine operator's manual.

(3) Check status of CNC.

Causes and Remedies

When manual operation is either impossible, perform countermeasure, based on the previous item "Jog operation cannot be done".
Confirm that a correct mode is selected according to the mode select status of CNC status display. Also, by confirming the automatic operation status it is possible to identify cycle operation, feed hold and cycle stop state.

1. When cycle operation is not started (Cycle start LED does not light)

"****" is displayed at status display on CRT.

(1) Mode select signal is not correct.

When the mode select signal is input correctly, following status display is done.
MDI :Manual data input mode (MDI)
MEM :Memory operation mode
RMT :Remote operation mode

If status display does not show a correct status, check the mode signal with following diagnosis function of PMC side (PMCDGN).

	#7	#6	#5	#4	#3	#2	#1	#0
G0043			DNCI			MD4	MD2	MD1

DNCI	MD4	MD2	MD1	Mode select
–	0	0	0	Manual data input mode
0	0	0	1	Memory operation mode
1	0	0	1	Remote operation mode

(2) Cycle start signal is not input

This signal turns 1 when cycle start button is pressed and turns 0 when it is released. The cycle start actuates when it changes from 1 to 0.
Check the state of the signal using PMC's diagnostic function(PMCDGN).

	#7	#6	#5	#4	#3	#2	#1	#0
G0007						ST		

#2 (ST) : Cycle start signal

(3) Feed hold signal is input

Under normal state, the feed hold signal is 1 when the feed hold button is not pressed.
Check the state of this signal using the PMC's diagnostic function (PMCDGN) .

	#7	#6	#5	#4	#3	#2	#1	#0
G0008			*SP					

#5 (*SP) : Feed hold signal

2. When an automatic operation is in progress (Cycle start LED is lit)

CNC's status display shows "STRT" on the CRT.

(1) Check the contents of diagnostic nos. 000 to 015.

	No.	Message	Display
a.	000	WAITING FOR FIN SIGNAL (Example)	: 1
b.	001	MOTION	: 0
c.	002	DWELL	: 0
d.	003	IN–POSITION CHECK	: 0
e.	004	FEEDRATE OVERRIDE 0%	: 0
f.	005	INTERLOCK / START LOCK	: 0
g.	006	SPINDLE SPEED ARRIVAL CHECK	: 0
	010	PUNCHING	: 0
	011	READING	: 0
	012	WAITING FOR (UN) CLAMP	: 0
h.	013	JOG FEEDRATE OVERRIDE 0%	: 0
i.	014	WAITING FOR RESET, ESP, RRW OFF	: 0
	015	EXTERNAL PROGRAM NUMBER SEARCH	: 0

Items with a to i relate with an automatic operation and their details are as follows :

a. An auxiliary function is being executed (waiting for FIN signal)

An auxiliary function (M/S/T/B) specified in a program is not ended. Check according to the following procedure.
At first, confirm the kind of interface of an auxiliary function.

	#7	#6	#5	#4	#3	#2	#1	#0
3001	HSIF							

#7(HSIF) 0 : M/S/T/B is of normal interface.

1 : M/S/T/B is of high–speed interface.

(1) Normal interface

When the auxiliary function finish signal turns from 1 to 0, the auxiliary function is supposed to be ended and the next block is read for operation. Confirm the status of this signal using PMC's diagnostic function(PMCDGN).

	#7	#6	#5	#4	#3	#2	#1	#0
G0004					FIN			

#3 (FIN) : Auxiliary function finish signal

(2) High–speed interface

The auxiliary function is supposed to be ended when the signals are in the following state. Confirm it using PMC's diagnostic function (PMCDGN).

<M series>

	#7	#6	#5	#4	#3	#2	#1	#0
G0005	BFIN				TFIN	SFIN		MFIN

#0(MFIN) : M function finish signal

#2(SFIN) : S function finish signal

#3(TFIN) : T function finish signal

#4(BFIN) : 2nd auxiliary function finish signal

	#7	#6	#5	#4	#3	#2	#1	#0
F0007	BF				TF	SF		MF

#0(MF) : M function strobe signal

#2(SF) : S function strobe signal

#3(TF) : T function strobe signal

#7(BF) : 2nd auxiliary function strobe signal

<T series>

	#7	#6	#5	#4	#3	#2	#1	#0
G0005				BFIN	TFIN	SFIN		MFIN

#0(MFIN) : M function completion signal

#2(SFIN) : S function completion signal

#3(TFIN) : T function completion signal

#4(BFIN) : Second auxiliary function completion signal

	#7	#6	#5	#4	#3	#2	#1	#0
F0007				BF	TF	SF		MF

#0(MF) : M function strobe signal

#2(SF) : S function strobe signal

#3(TF) : T function strobe signal

#4(BF) : Second auxiliary function strobe signal

<M/T series>

	#7	#6	#5	#4	#3	#2	#1	#0
G0004			MFIN3	MFIN2				

#4(MFIN2) : Second M function completion signal

#5(MFIN3) : Third M function completion signal

	#7	#6	#5	#4	#3	#2	#1	#0
G0008			MF3	MF2				

#4(MF2) : Second M function strobe signal

#5(MF3) : Third M function strobe signal

* The second and third M functions are enabled only when bit 7 (M3B) of parameter No. 3404 is set to 1.

Signal	End state	
Finish signal	0	1
store signal	0	1

b. Travel command is being executed

CNC is reading an axis command (X,Y,Z,...) in a program and giving the command to the axis.

c. A dwell command is being executed

CNC is reading a dwell command (G04) in a program and is executing the dwell command.

d. In–position check (confirming positioning) is being done

Positioning (G00) to a specified position of a specified axis is not completed.
Whether positioning is completed or not is checked as the servo position error amount. Check it CNC's diagnostic function as follows:

DGN no.300 [Position Error] > PARAM 1826

[In–position width] Position error amount almost becomes 0, when positioning of an axis completes and when the amount becomes within the in–posiiton width, it is assumed that positioning completes and the next block is exected.
If position error amount does not become within the in–position width, refer to servo alarm 400, 4n0 and 4n1.

e. Feedrate override is at 0%

Actual feedrate is overridden by the override signals to a programmed feedrate. Check the override signals using the PMC's diagnostic function (PMCDGN).

<Normal override signal>

	#7	#6	#5	#4	#3	#2	#1	#0
G0012	*FV7	*FV6	*FV5	*FV4	*FV3	*FV2	*FV1	*FV0

***FVn** :Feedrate override

<2nd override signal (option)>
Feed rate is overridden more finely using the signals below:
See MTB's manual whether this feature is equipped.

	#7	#6	#5	#4	#3	#2	#1	#0
G0013	*AFV7	*AFV6	*AFV5	*AFV4	*AFV3	*AFV2	*AFV1	*AFV0

***AFVn** :2nd feed rate override

<State of override signal>

*FV7·····*FV0	
1 1 1 1 1 1 1 1	0%
1 1 1 1 1 1 1 0	1%
:	:
1 0 0 1 1 0 1 1	100%
:	:
0 0 0 0 0 0 0 0	245%
0 0 0 0 0 0 0 0	0%

*AFV7·····*AFV0	
1 1 1 1 1 1 1 1	0%
1 1 1 1 1 1 1 0	1%
:	:
1 0 0 1 1 0 1 1	100%
:	:
0 0 0 0 0 0 0 1	245%
0 0 0 0 0 0 0 0	0%

f. Interlock signal or start lock signal is input <T series only>

Start lock signal is input

	#7	#6	#5	#4	#3	#2	#1	#0
G0007							STLK	

#1 (STLK) With this signal being 1, start lock signal is input.

<Common to T series and M series>
There are a plural number of interlock functions. Parameters are set by machine tool builders for which interlock function is used.
Therefore, confirm the following parameters at first:

	#7	#6	#5	#4	#3	#2	#1	#0
3003					DIT	ITX		ITL

#0 (ITL) 0 : Interlock signal(*IT) is valid.
#2 (ITX) 0 : Interlock signal (*ITn) is valid.
#3 (DIT) 0 : Interlock signal (± MITn) is valid.

Confirm which interlock signal is activated by the PMC's diagnostic function (PMCDGN) .

(1) Interlock signal (*IT) is input

	#7	#6	#5	#4	#3	#2	#1	#0
G0008								*IT

#0 (*IT) : When this bit is 0, interlock signal is input.

(2) Interlock signal per each axis (*ITn) is input

	#7	#6	#5	#4	#3	#2	#1	#0
G0130	*IT8	*IT7	*IT6	*IT5	*IT4	*IT3	*IT2	*IT1

***ITn** When the bit is 0, the corresponding axis's interlock signal is input.

(3) Interlock signal per axis and direction(+/– MITn) is input

	#7	#6	#5	#4	#3	#2	#1	#0
G0132					+MIT4	+MIT3	+MIT2	+MIT1
						↓	↓	↓
G0134					–MIT4	–MIT3	–MIT2	–MIT1

***+MITn** Interlock signal is input to the corresponding axis and direction with the signal being 0.

(4) Controlled axis detach function is running. A detached axis is specified for travelling.

*This function is valid when CNC parameter No.1005#7=1. For whether this function is running or not, confirm the following signal using PMC's diagnostic function (PMCDGN). Check the axis concerned.

	#7	#6	#5	#4	#3	#2	#1	#0
F0110	MDTCH8	MDTCH7	MDTCH6	MDTCH5	MDTCH4	MDTCH3	MDTCH2	MDTCH1

When signal MDTHn is "1" ,the axis detach function is in valid.
The control axis detach function becomes valid by the following signal issued from the PMC or a CNC side parameter. Check as in the following procedure :

1) The control axis detach signal (DTCHn) is input.

	#7	#6	#5	#4	#3	#2	#1	#0
G0124	DTCH8	DTCH7	DTCH6	DTCH5	DTCH4	DTCH3	DTCH2	DTCH1

If it is 1, the corresponding axis is detached.

2) The following parameter enables the control axis detach function to the corresponding axis.

	#7	#6	#5	#4	#3	#2	#1	#0
0012	RMVx							

#7(RMVx) 0 : Controlled axis is connected

1 : Controlled axis is detached

g. CNC is waiting for spindle speed arrival signal to be input

Actual spindle speed does not arrive at a speed specified in a program. Confirm the signal state using the PMC's diagnostic function (PMCDGN).

	#7	#6	#5	#4	#3	#2	#1	#0
G0029				SAR				

#4(SAR) : When this signal is 0, spindle speed does not arrive at the specified speed.

This function is valid when PARAM 3708#0=1.

h. Manual feedrate override is 0% (dry run)

Normally manual feedrate override function is used for jog feed. But when DRN(dry run) signal turns on during an auomatic operation,override values set with these signals become valid to the following speed set by a parameter.

	#7	#6	#5	#4	#3	#2	#1	#0
G0046	DRN							

#7(DRN) : Dry run signal is input with this signal being 1.

1410	Dry run rate

The rate when the following override value is 100%.

	#7	#6	#5	#4	#3	#2	#1	#0
G0010	*JV7	*JV6	*JV5	*JV4	+JV3	*JV2	*JV1	*JV0
						↓	↓	↓
G0011	*JV15	*JV14	*JV13	*JV12	+JV11	*JV10	*JV9	*JV8

When override value is 0%, all bits of the above address is [1111 . . . . 1111] or [0000 . . . . 0000].

*JV15 . . . . . JV0	Override
1111 1111 1111 1111	0.00%
1111 1111 1111 1110	0.01%
:	:
1101 1000 1110 1111	100.00%
:	:
0000 0000 0000 0001	655.34%
0000 0000 0000 0000	0.00%

i. NC is in a reset state

In this case, the CNC's status display shows RESET. Refer to item 1.

(2) Only rapid traverse in positioning (G00) does not function Confirm the following parameter and signals from the PMC.

(a) Setting value of rapid traverse rate

1420	Rapid traverse rate per axis

(b) Rapid traverse override signals

	#7	#6	#5	#4	#3	#2	#1	#0
G0014							ROV2	ROV1
G0096	HROV	*HROV6	*HROV5	*HROV4	*HROV3	*HROV2	*HROV1	*HROV0

(HROV–0) (HROV=1)

ROV1	ROV2	Override
0	0	100%
1	1	50%
0	1	25%
1	1	Fo

*HROV6 *HROV0	Override
1 1 1 1 1 1 1	0%
1 1 1 1 1 1 0	1%
:	:
0 0 1 1 0 1 1	100%

1421	Rapid traverse override F0 rate

(3) Only feed (other than G00) does not function

(a) Maximum feed rate set by parameter is incorrect.

1422	Maximum feedrate

Feed rate is clamped at this upper feed rate.

(b) Feed rate is specified by feed per revolution (mm/rev)

1 Position coder does not rotate

Check the connection between spindle and position coder
The following failure is considered:

- T iming belt is broken
- Key is removed
- Coupling is loose
- Connector of signal cable is loosened

2 Position coder is faulty

(c) Thread cutting does not operate

1 Position coder does not rotate

Check the connection between spindle and position coder
The following failure is considered:

- Timing belt is broken
- Key is removed
- Coupling is loose
- Connector of signal cable is loosened

2 Position coder is faulty

Position coder is connected to the spindle amplifier when serial interface spindle is used or connected to the CNC when analog interface spindle is used.
For details of connection, refer to the following.

<T series>
Whether A/B phase signals from the position coder are read correctly, can be judged also by the spindle speed display on the CRT screen (position screen). (However, it is not displayed when PARAM 3105#2=0).

<Serial spindle amplifier>

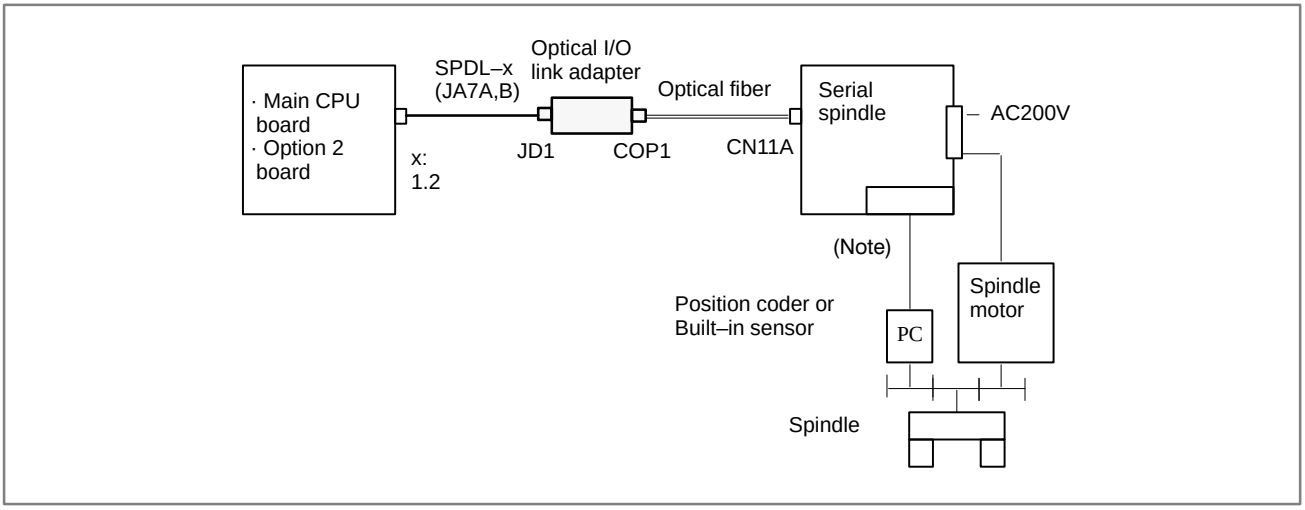

<Analog interface spindle amplifier>

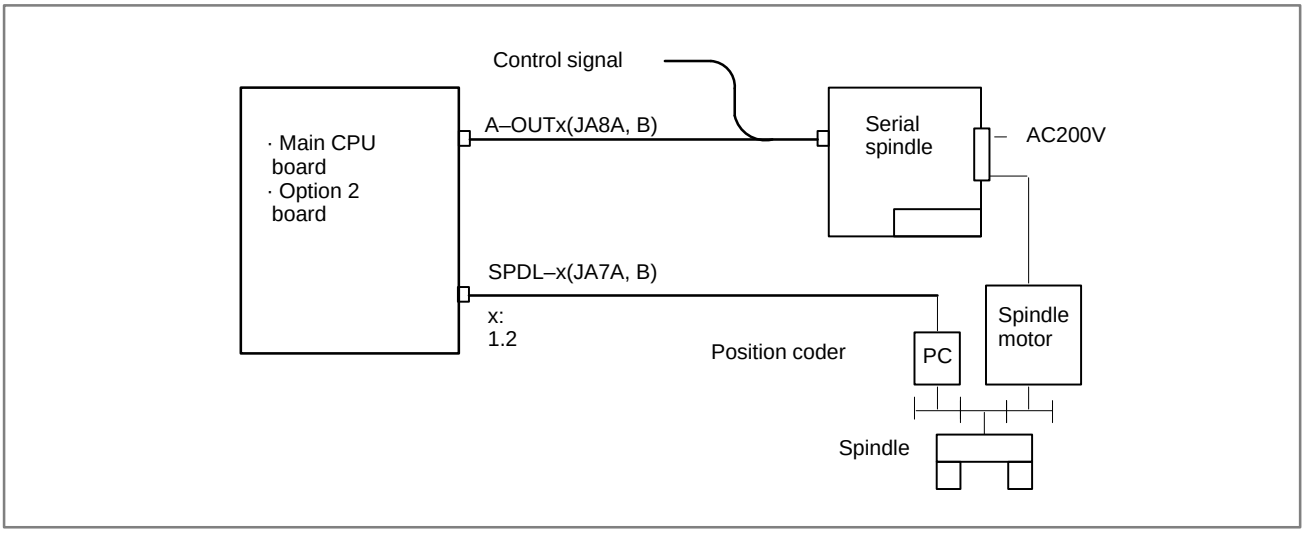

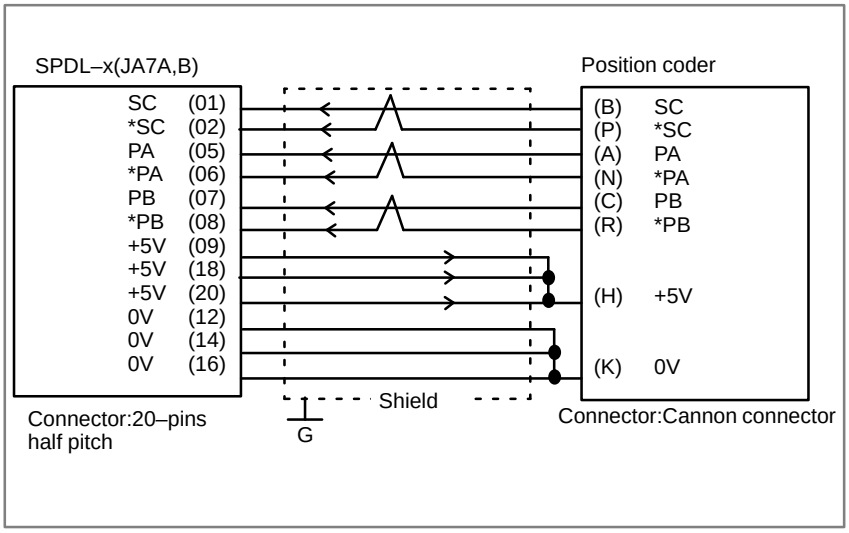
SPDL–x(JA7A,B)
SC (01)
*SC (02)
PA (05)
*PA (06)
PB (07)
*PB (08)
+5V (09)
+5V (18)
+5V (20)
0V (12)
0V (14)
0V (16)
Connector:20–pins
half pitch
Shield
G
Position coder
(B) SC
(P) *SC
(A) PA
(N) *PA
(C) PB
(R) *PB
(H) +5V
(K) 0V
Connector:Cannon connector

8.7 CYCLE START LED SIGNAL HAS TURNED OFF

Points

(1) After cycle operation is started, then stopped, check as follows:
(2) Confirm cycle start LED on machine operator's panel.
(3) Confirm CNC's diagnostic function

Causes and Remedies

The reason why cycle start LED signal (STL) has turned off are displayed on CNC's diagnostic numbers 020 to 025 as follows:

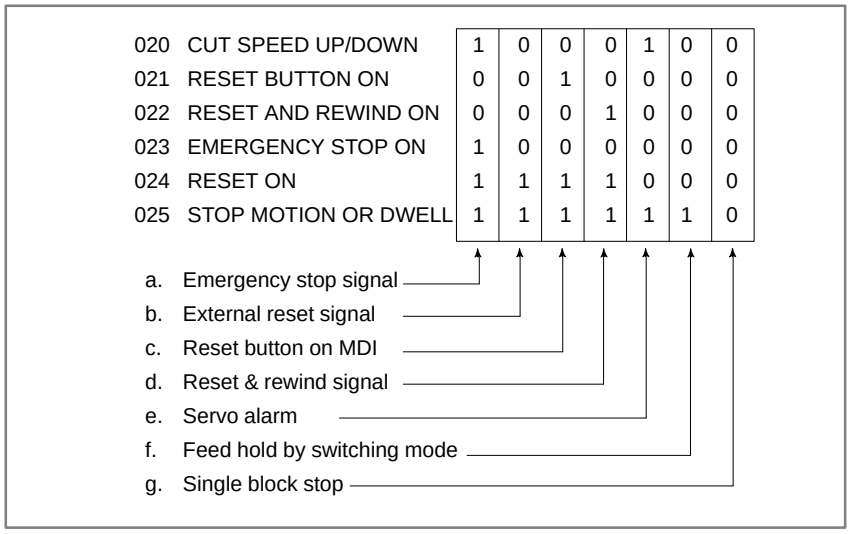

Details of signals a to g are as follows:
Confirm the signals concerned using diagnostic function (PMCDGN).

a. Emergency stop is input

1 When I/O card is used :

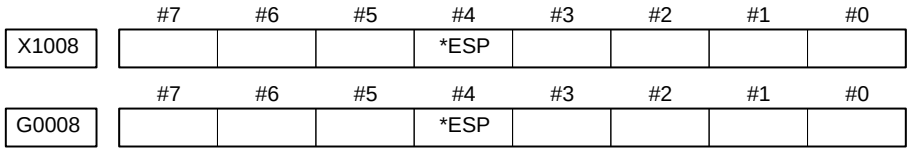

***ESP=0** : Emergency stop signal is input :

2 When I/O card is not used:

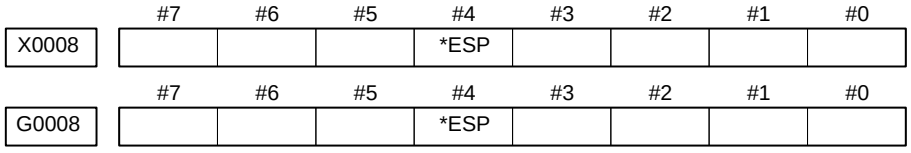

***ESP=0** : Emergency stop signal is input :

b. External reset signal is input

	#7	#6	#5	#4	#3	#2	#1	#0
G0008	ERS							

#7(ERS) : When the bit is 1, external reset signal is input.

This signal is usually used for a confirmation signal of M02 when an M02 is specified in a program as the end of a program.
Therefore, when M02 is executed, this signal is input.

c. Reset button on the MDI is pressed

An automatic operation is put into a reset status when RESET key on the MDI panel is pressed.

d. Reset & rewind signal is input

	#7	#6	#5	#4	#3	#2	#1	#0
G0008		RRW						

#6(RRW) : When this signal is 1, the reset & rewind signal is input.

This signal is usually used for a confirmation signal of M30 when an M30 is specified in a program as the end of a program.
Therefore, when M30 is executed, this signal is input.

e. Servo alarm has generated

When any servo alarm has generated, cycle operation is put into the reset state and operation stop.

f. Cycle operation is in a feed hold state

The cycle operation becomes feed hold state in the following cases:

1 Modes are switched from an automatic operation mode to a manual operation mode.
2 Feed hold signal is input.

<Mode select signal>

	#7	#6	#5	#4	#3	#2	#1	#0
G0043						MD4	MD2	MD1

Automatic operation	memory edit(EDIT)	0	1	1
	Automatic operation (AUTO)	0	0	1
	Manual data input (MDI)	0	0	0
Manual operation	Jog feed (JOG)	1	0	0
	Handle/step	1	0	1
	TEACH IN HANDLE	1	1	1
	TEACH IN JOG	1	1	0

<Feed hold signal>

	#7	#6	#5	#4	#3	#2	#1	#0
G0008			*SP					

#5(*SP) : When this signal is 0, the feed hold signal is input.

g. It become single block stop during automatic operation

	#7	#6	#5	#4	#3	#2	#1	#0
G0046							SBK	

#1(SBK) When this signal is 1, the single block signal is input.

8.8 NOTHING IS DISPLAYED ON CRT

Points

Check whether it is a trouble of display or a trouble of the system.

Judgement of the point

Check whether the STATUS LED on the main board shows the following state.

	1	2	3	4	
STATUS	○	×	×	×	(○ : on, × : off)

If the status shows the above state, the system is normal.
Therefore, display system may be faulty.
If the status shows other state, a hardware other than the display system may be troublesome.

Causes and remedies

1. When the display system is in toruble

(1) Confirmation item

1 Is power supplied to the display?
2 Is a video signal connected?Isn't it disconnected? or braked?

(2) Causes and remedies

1 Power to the display is faulty. (Exchange power supply unit).
2 Cable connection is faulty. (Correct the connection).
3 Module is faulty (Exchange CRT control module)
4 Display is faulty.

<CRT control module mounting position> Main CPU board

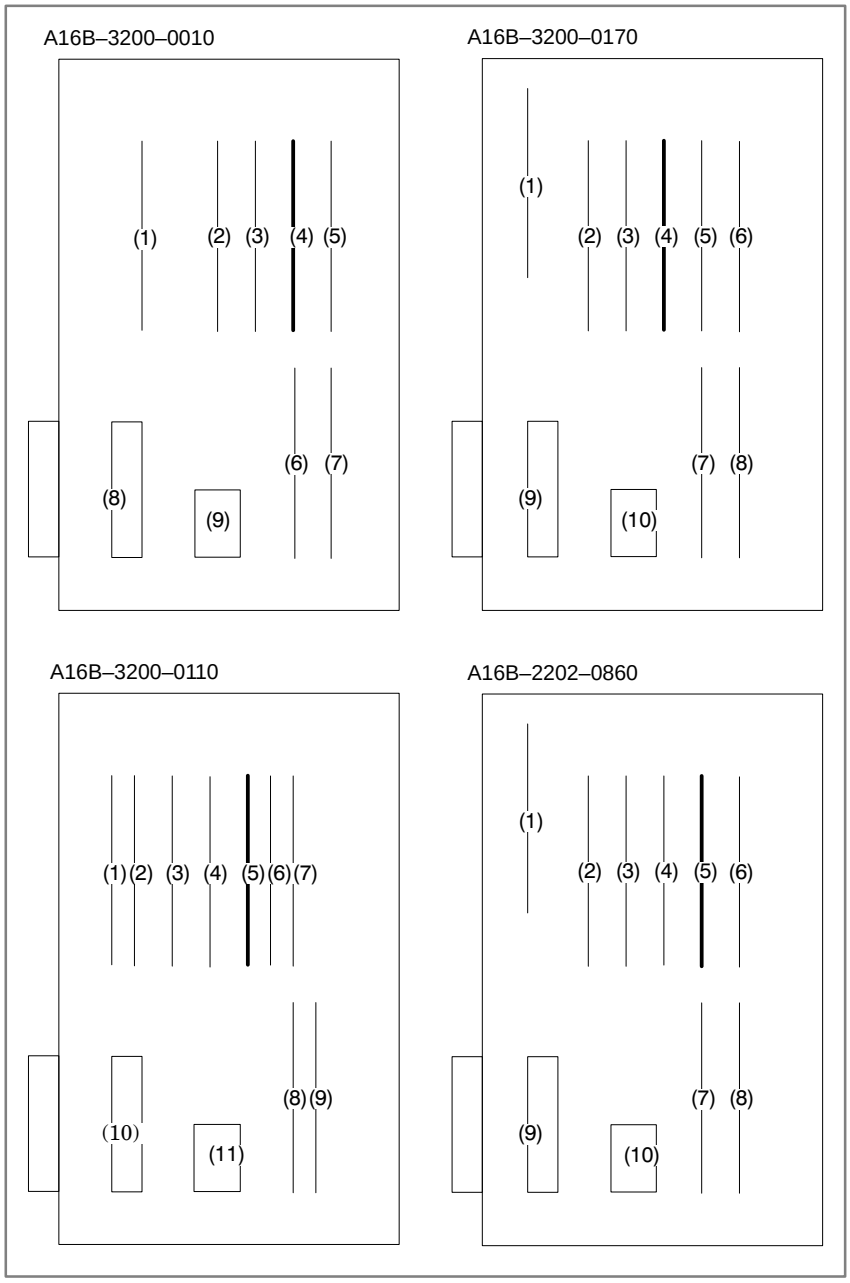

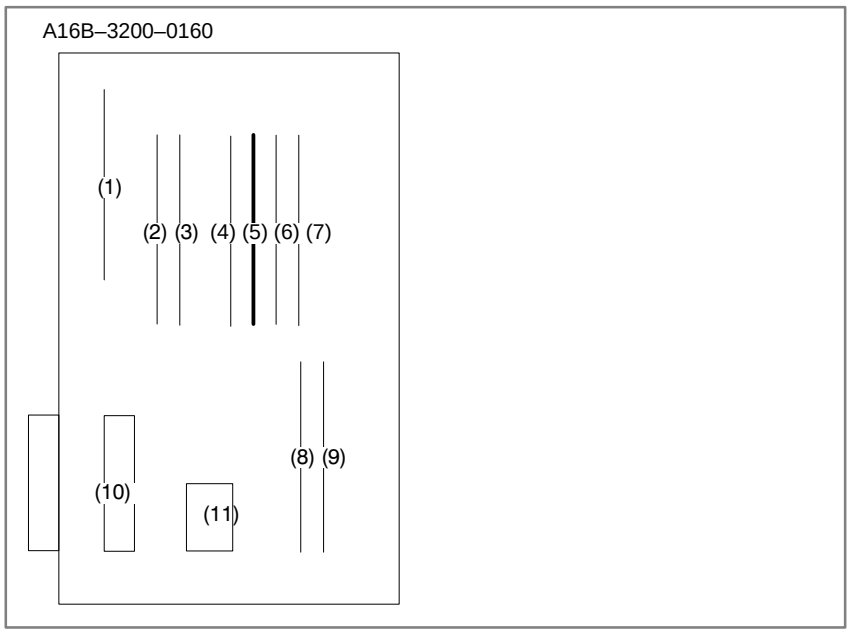

<CRT control module mounting position> With CAP–II function>

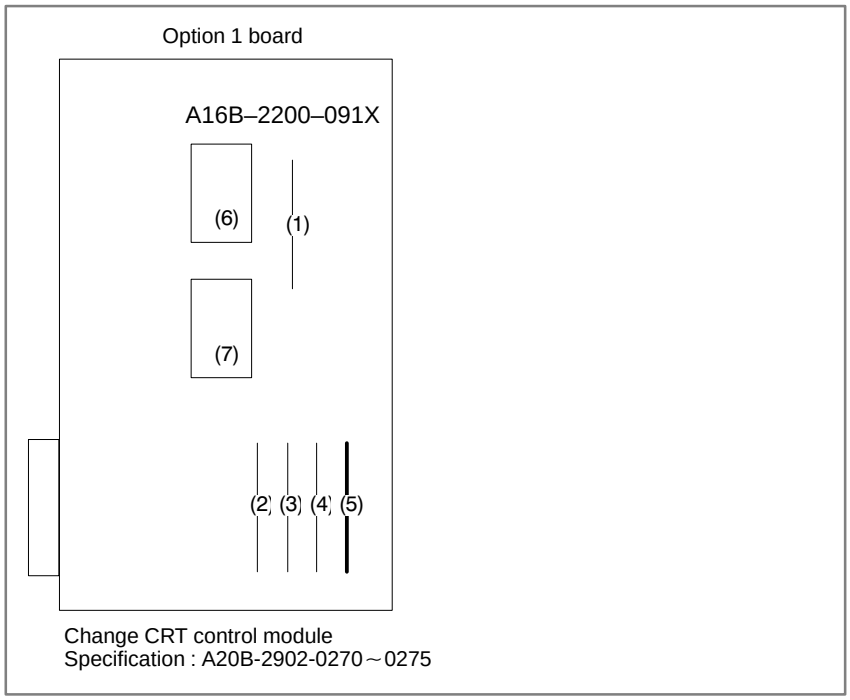

2. When system is in trouble

	1	2	3	4	
STATUS	○	×	×	×	(○ : on, × : off)

When STATUS LED on the main board is other than above, check LEDs on the main CPU board and other optional boards,identify the trouble and make an appropriate action. See 5.4.2 for LED display.

8.9 ALARM 85 TO 87 (READER/PUNCHER INTERFACE ALARM)

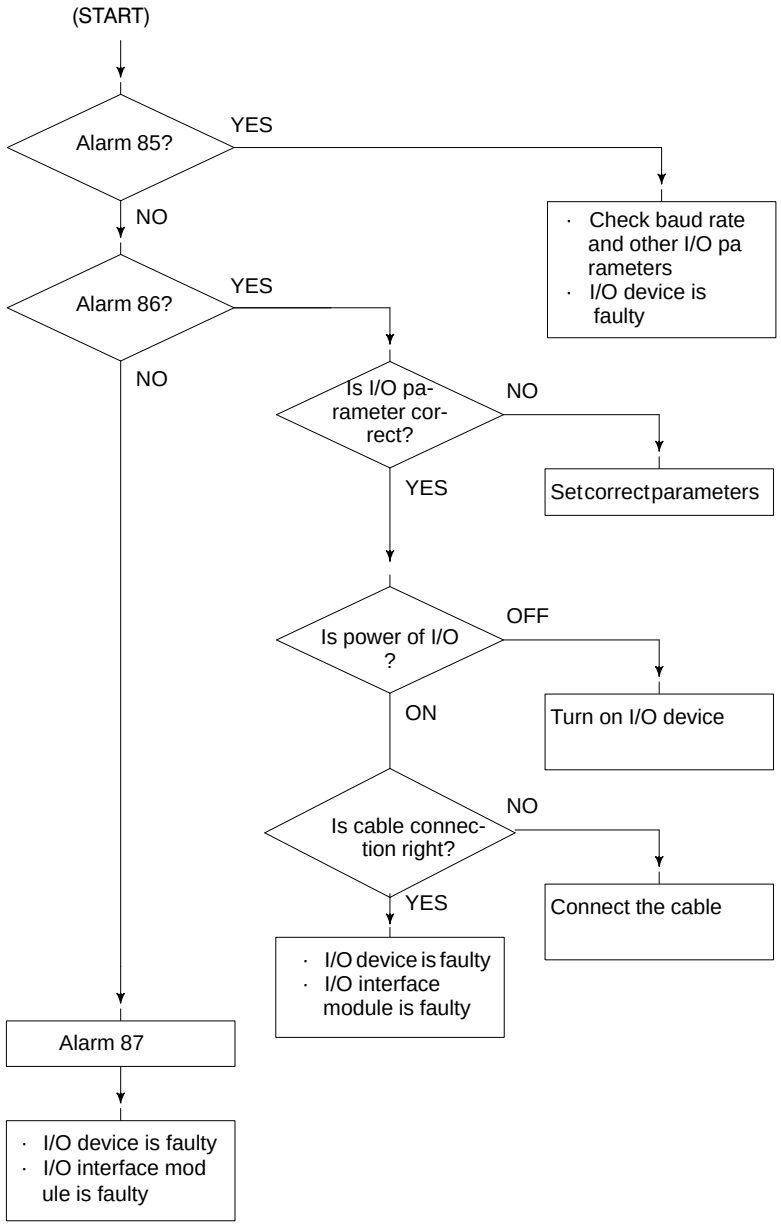

Causes

(a) Parameters on reader/puncher interface are not correct.

Check the following setting data and parameters.

(b) External I/O device or host computer is faulty.

(c) I/O board is faulty.

(d) Cable between NC and I/O device is faulty.

Countermeasures

(a) Parameters on reader/puncher interface are not correct.

Check the following setting data and parameters:
<Setting>
PUNCH CODE=0 OR 1 (0: EIA,1:ISO)
Select ISO or EIA according to the type of I/O device.
If punch code does not match, alarm 86 will generate.

<Parameter>

Value of parameter 0020 / Function		0	1	2	3	
Feed		0101#7	0111#7	0121#7	0131#7	
Data input code		0101#3	0111#3	0121#3	0131#3	
Stop bit		0101#0	0111#0	0121#0	0131#0	
Type of I/O device		102	112	122	132	
Baud rate		103	113	123	133	
Communication method	0135#3	–	–	–	0	1
		RS–232C				RS–422
Connector		MAIN CPU BOARD			OPTION–1 BOARD	
		JD5A		JD5B	JD5C	JD6A

Numbers in the table indicate parameters and bit numbers.
Example) 101#7:bit7 of parameter 101.

Note
For data communications by RS–422, refer to parameters 134 and 135.

	#7	#6	#5	#4	#3	#2	#1	#0
0101	NFD				ASI			SB2
0111								
0121								
0131								

#7(NFD) 0 : Feed is output before and after data in data output (FANUC PPR)
1 : Feed is not output (standard).

#3(ASI) 0 : Data input code is EIA or ISO (automatic recognition)
1 : Data input code is ASCII.

#0(SB2) 0 : No. of stop bits is 1.
1 : No. of stop bits is 2.

0102	Type of I/O device
0112	
0122	
0132	

Value	TYPE OF I/O DEVICE
0	RS–232–C (control codes DC1 to DC4 are used)
1	FANUC CASSETTE B1/B2 (bubble cassette)
2	FANUC CASSETTE F1 (Old type FLOPPY CASSETTE ADAPTOR)
3	FANUC PROGRAM FILE Mate, FANUC FA CARD ADAPTOR FANUC FLOPPY CASSETTE ADAPTOR, FANUC SYSTEM P–MODEL H, FANUC Handy File
4	Not used
5	Portable tape reader
6	FANUC PPR, FANUC SYSTEM P–MODEL G, FANUC SYSTEM P–MODEL H

0103	Baud rete
0113	
0123	
0133	

Value	Baud rate
7	600
8	1200
9	2400

10	4800
11	9600
12	19200

When bit#3 of parameter no. 0135=1 (RS–422 interface), the following setting is also available.

Value	Baud rate
13	38400
14	76800
15	86400

Check the following parameters also, when parameter no.0020 is 3.

	#7	#6	#5	#4	#3	#2	#1	#0
0134			CLK	NCD		SYN	PRY	

#5(CLK) 0 : Internal clock is used for baud rate clock of RS–422 interface.
1 : External clock is used for baud rate clock of RS–422 interface.

#4(NCD) 0 : CD (signal quality detection) of RS–232C interface is checked.
1 : CD (signal quality detection) of RS–232C interface is not checked.

#2(SYN) 0 : In protocol B, NC reset/alarm is not informed to the host.
1 : In protocol B, NC reset/alarm is informed to the host by SYN and NAK code.

#1(PRY) 0 : No parity bit
1 : With parity bit

	#7	#6	#5	#4	#3	#2	#1	#0
0135	RMS				R42	PRA	ETX	ASC

#7(RMS) In protocol A, status of remote / tape operation of SAT command is

0 : Always transmitted by 0.

1 : Transmitted by the contents of remote / tape switching request issued by SET command from the CNC.

#3(R42) 0 : Interface is of RS–232C.

1 : Interface is of RS–422.

#2(PRA) 0 : Communication protocol is protocol A

1 : Communication protocol is protocol B

#1(ETX) 0 : End code of protocol A or extended protocol A is CR of ASCII/ISO.

1 : End code of protocol A or extended protocol A is ETX of ASCII/ISO.

#0(ASC) 0 : All the communication codes except for NC data is ISO code.

1 : All the communication codes except for NC data is ASCII code.

(b) External I/O device or Host computer is in trouble

(i) Check whether the setting on communication of external I/O device or host computer is the same as that of the CNC. (baud rate, stop bits,etc.) If they are not the same, change the setting.

(ii) When spare I/O device presents, check whether it is possible to realize communication using the spare I/O device.

(c) Spindle module or communication control module is faulty

(i) When parameter no.0020 is 0 or 1 or 2 (JD5A,JD5B of Main CPU board) Replace the module since spindle module may be faulty.

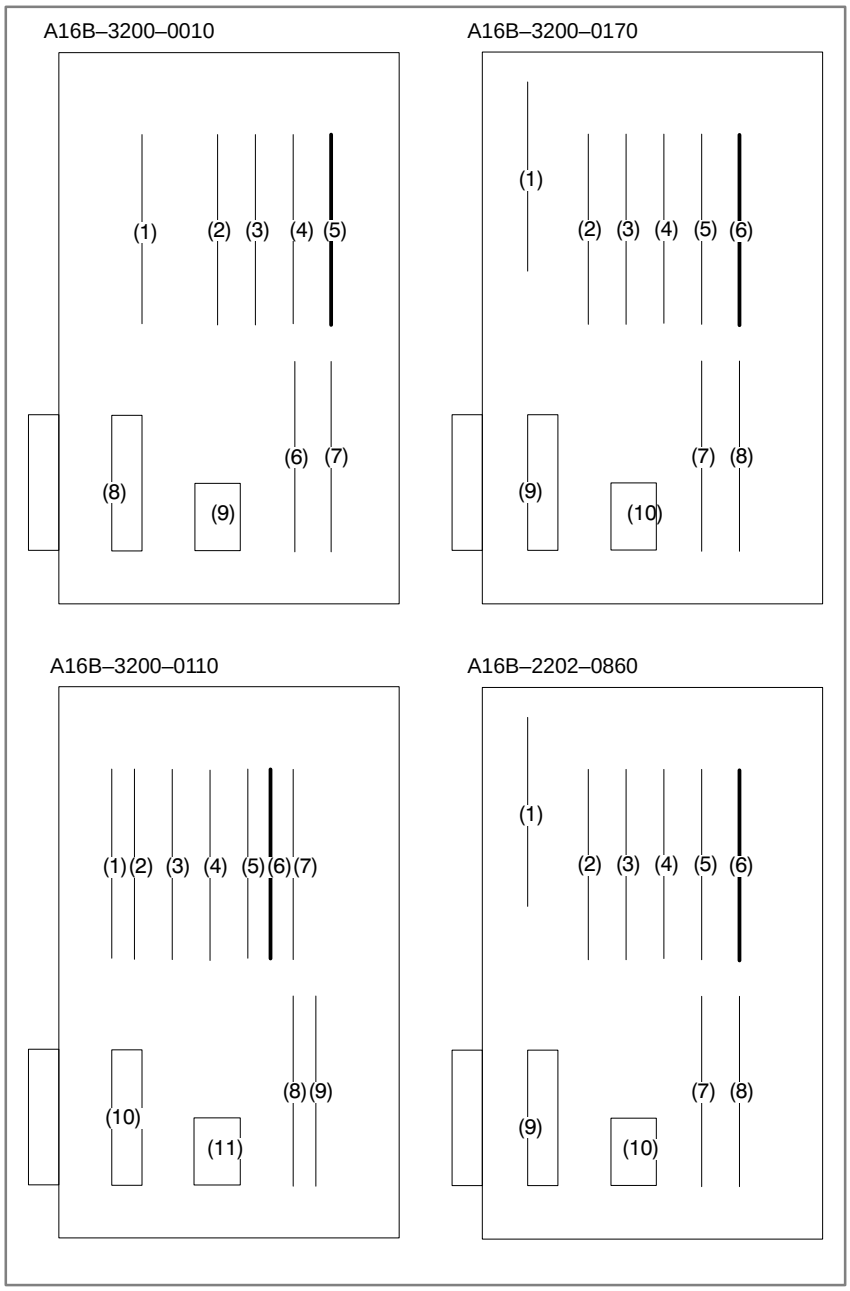

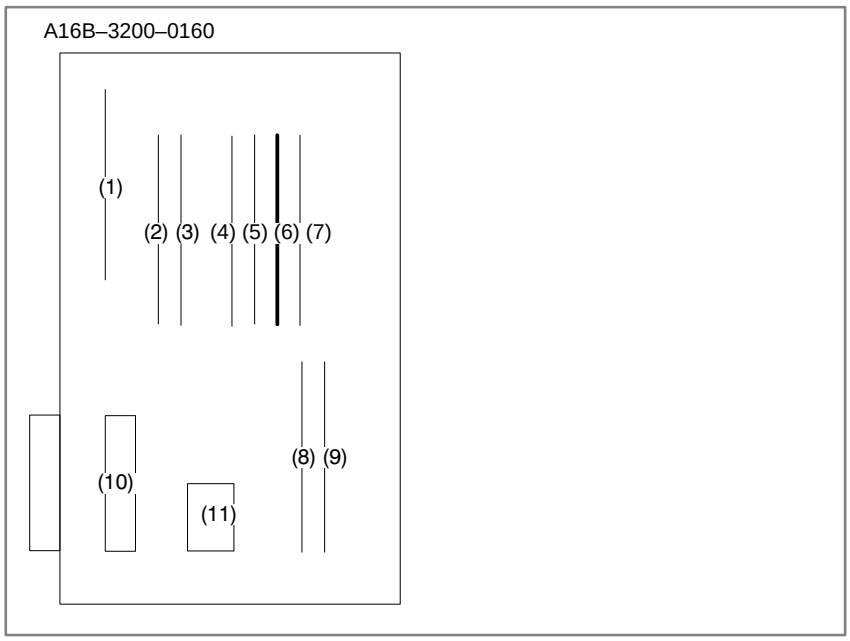

(ii) When parameter no. 0020 is 3 (JD5C,JD6A of option 1 board) Because communication control module (5) may be faulty, replace the module.

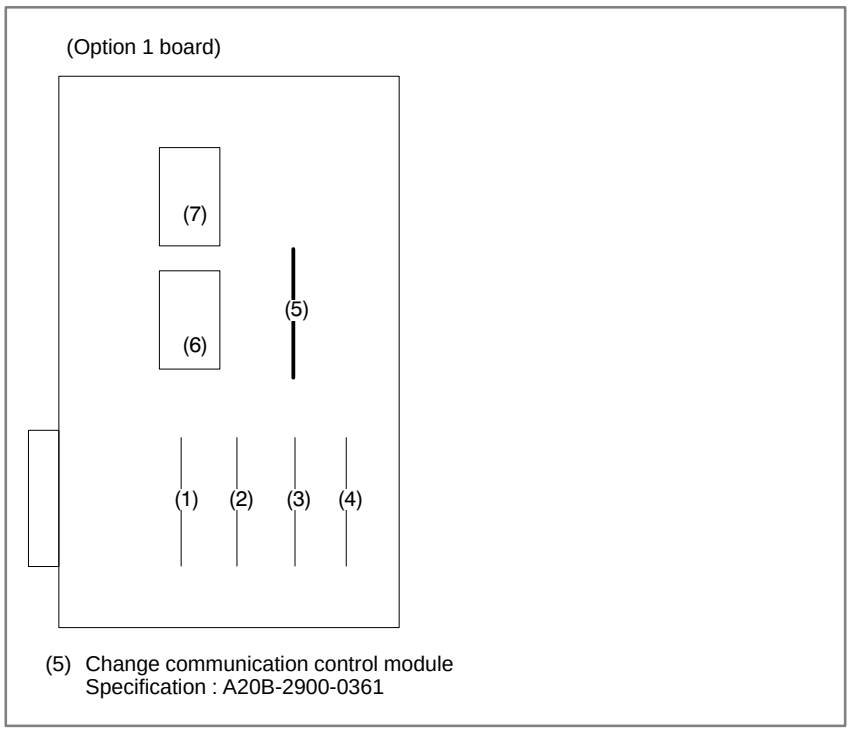

(d) Cable between NC and I/O device is faulty.
Check the cable for disconnection or wrong connection.

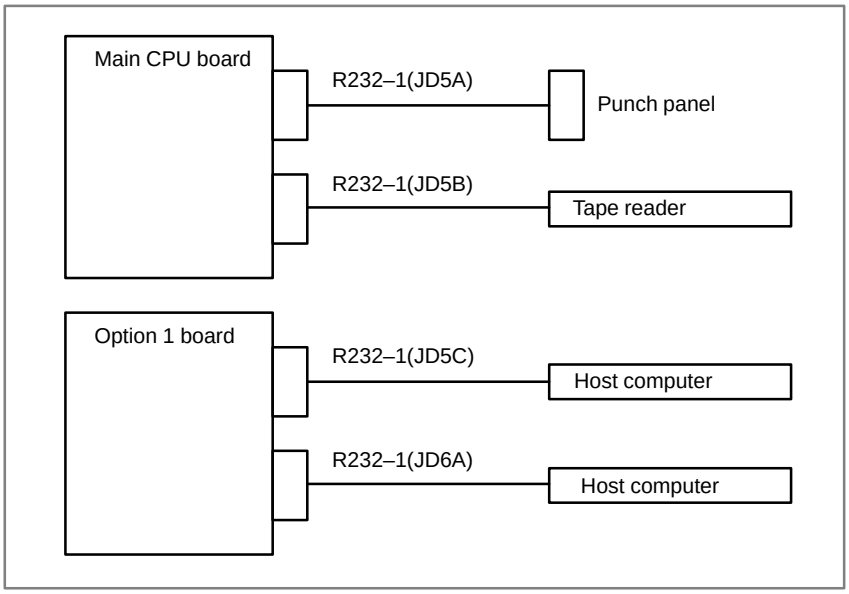

< Cable connection>

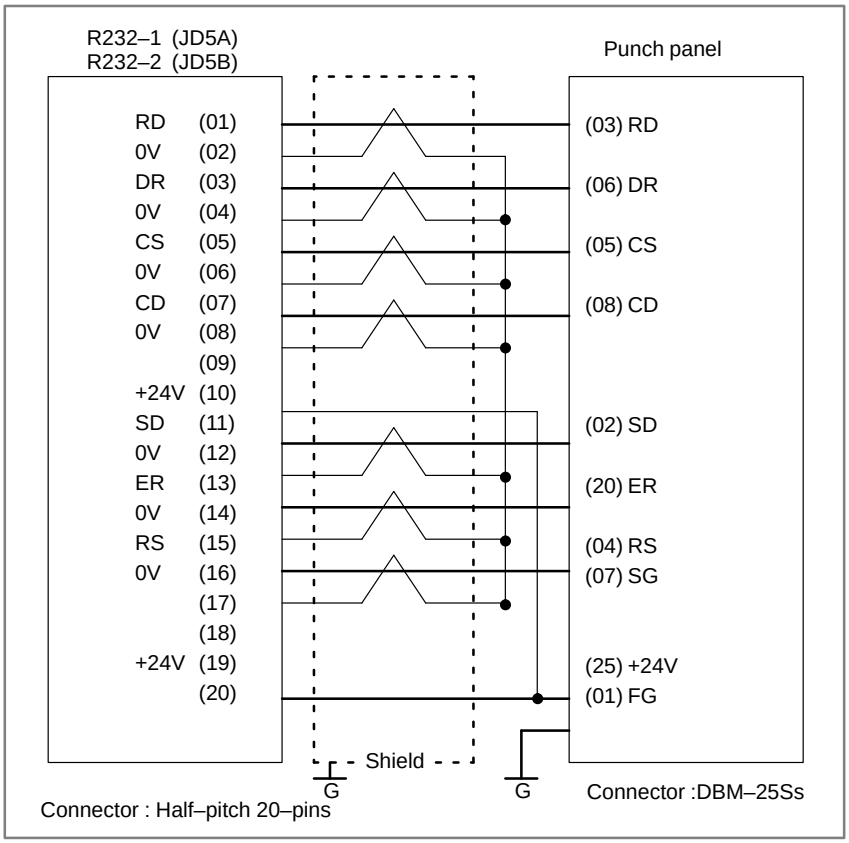

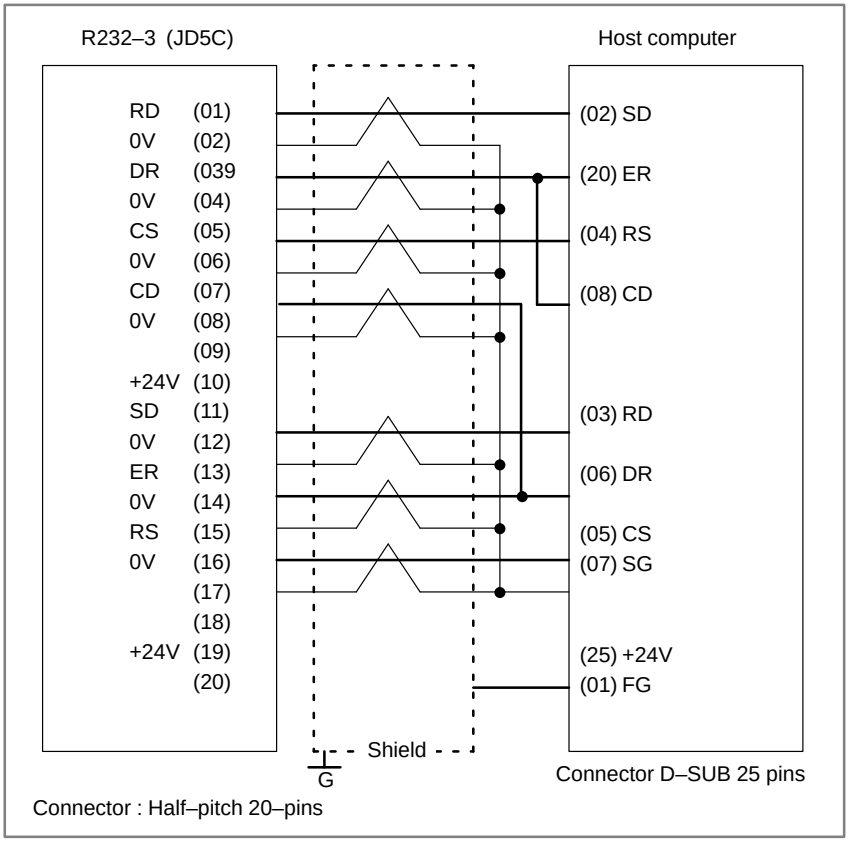

Notes
1 When CS is not used, connect it to RS.
2 For protocol A or extended protocol A: When DR is not used, connect it to ER. Always connect CD to ER.

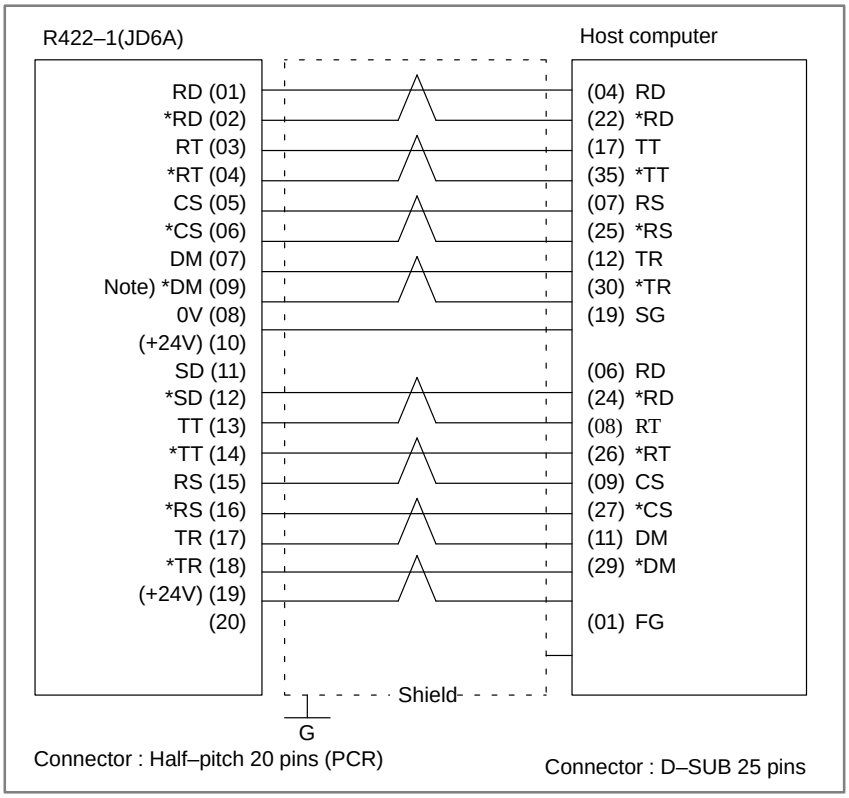

Note
Always use a twisted pair cable.

8.10 REFERENCE POSITION DEVIATES

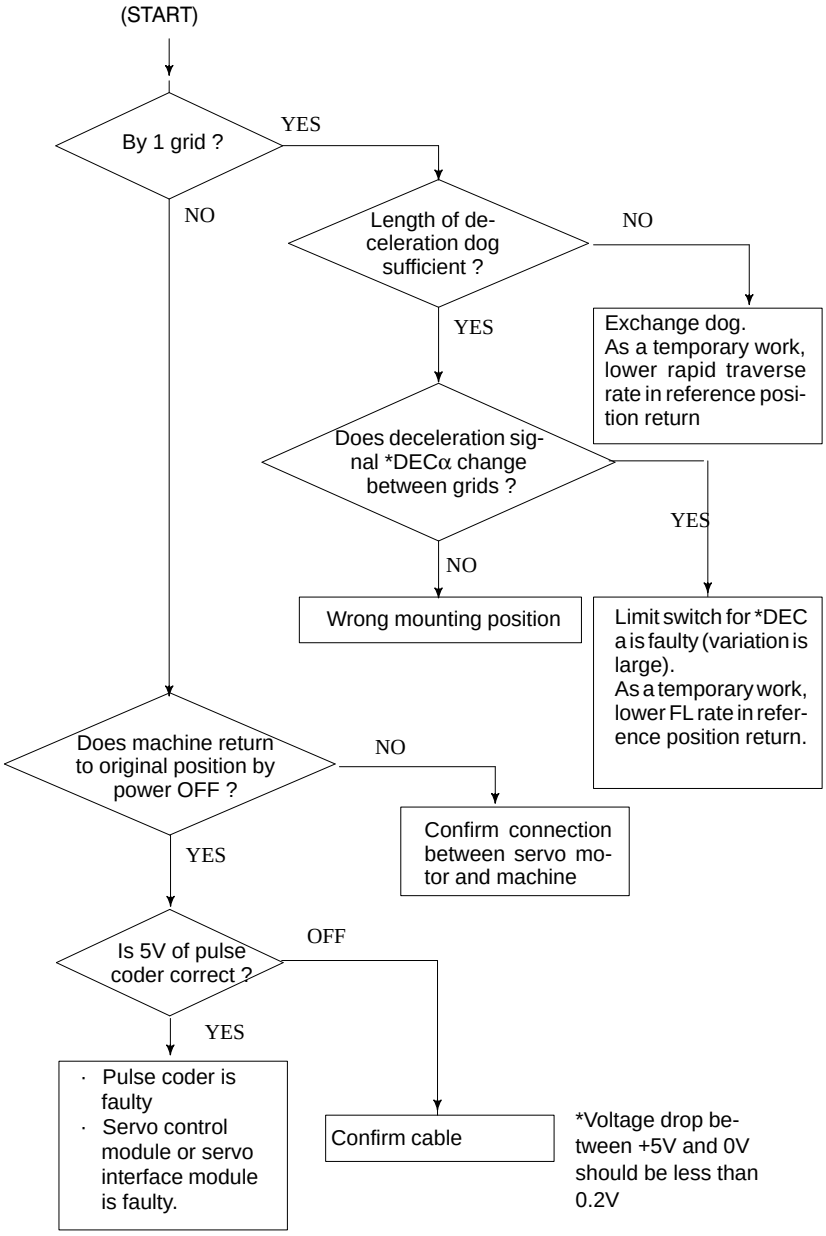

8.11 ALARM 90 (REFERENCE POSITION RETURN IS ABNORMAL)

Contents

Reference position return was executed when the following condition is not satisfied:
The CNC received one rotation signal at least one time when the axis is moving to the reference position at a speed higher than a speed equivalent to 128 pulses of position error amount(DGN300).

Countermeasures

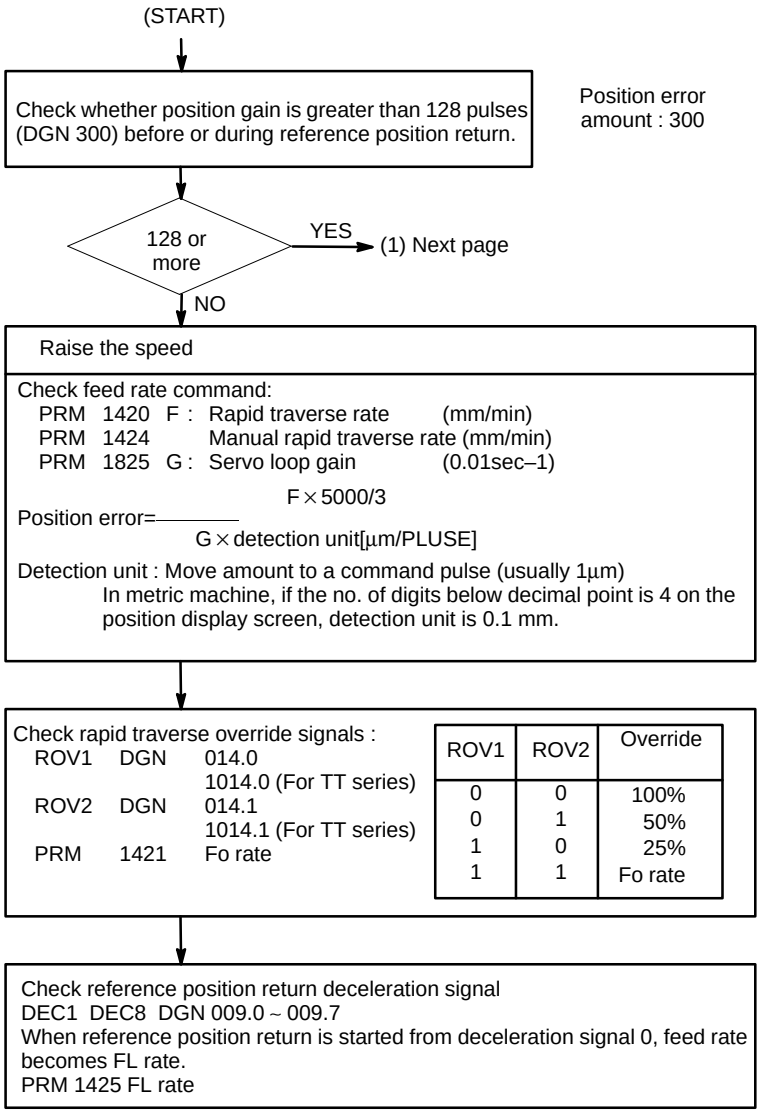

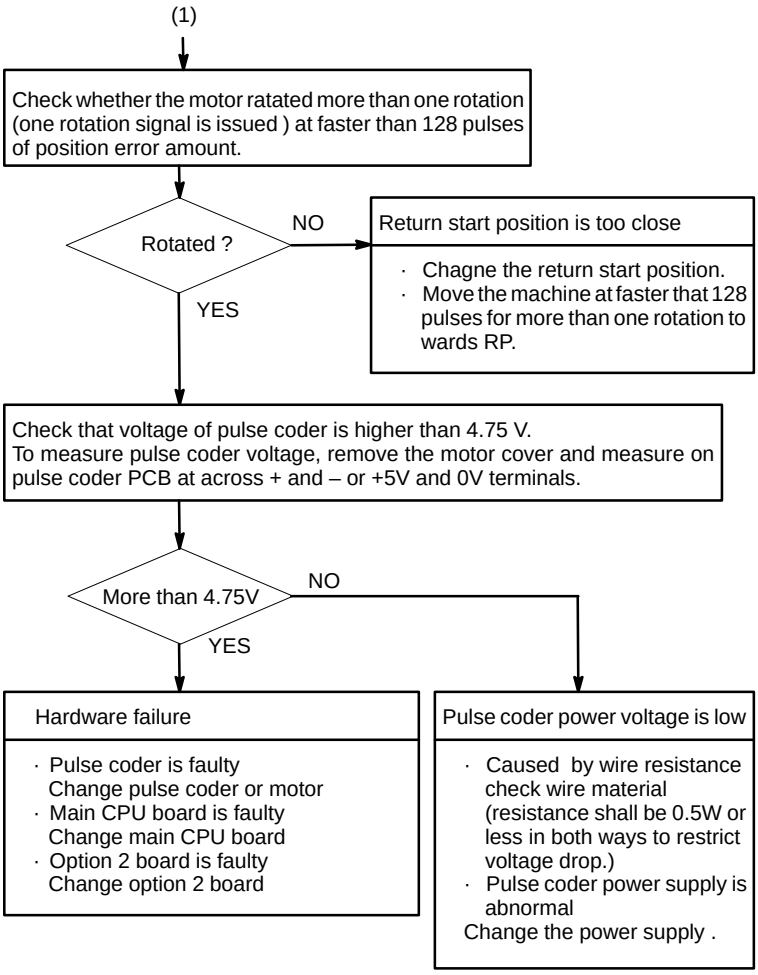

Notes

1 After the pulse coder or motor is exchanged, reference position or machine's standard point may be different from former one. Please set it correctly.
2 When the main board is exchanged, all the data stored in memory is lost. Reset all the NC data again, referring to the data input/output item.

- **Reference**

A speed more than 128 pulses is required because if speed is lower that this, one–rotation signal does not function stably, causing improper position detection.

8.12 ALARM 300 (REQUEST FOR REFERENCE POSITION RETURN)

Absolute position data in the serial pulse coder was lost.
(This alarm will be generated when serial pulse coder is exchanged or position feedback signal cable of the serial pulse coder is disconnected).

Remedies

Machine position must be memorized using the following method:

- **When reference position return function is present**

(1) Execute manual reference position return only for an axis for which this alarm was generated.When manual reference position return cannot be executed because of an another alarm, set parameter 1815#5 to 0 and release the alarm and perform manual operation.

(2) Press RESET key at the end of reference position return to release the alarm.

- **When reference position return function is not present**

Execute dogless reference position setting to memorize the reference position.

- **When serial pulse coder is changed**

Since the reference position is different from the former one, change the grid shift value (PRM 1850) to correct the position.

Related parameters

	#7	#6	#5	#4	#3	#2	#1	#0
1815			APC x	APZx				

#5(APCx) 0 : Position detector is incremental pulse coder.
1 : Position detector is absolute pulse coder.

#4(APZx) Reference position of absolute pulse coder is :
0 : not established
1 : established

System configuration

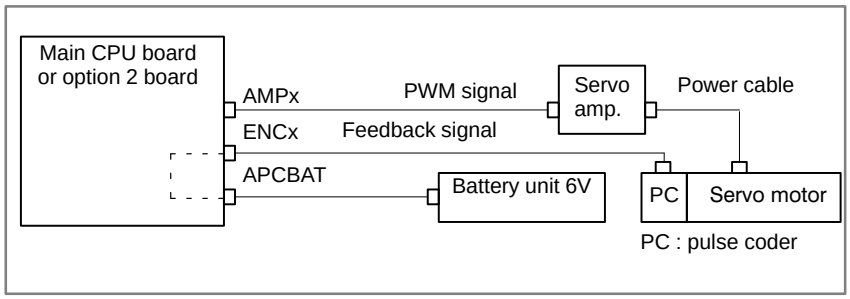

8.13 ALARM 301 TO 305 (ABSOLUTE PULSE CODER IS FAULTY)

Absolute pulse coder, cable or servo module is faulty.

Countermeasures

1 Agitate the absolute pulse coder cable connected to the main CPU board. If an alarm is issued, replace the cable.

Series 16 main CPU board (MAIN–A): JF1 to JF4
Series 16 main CPU board (MAIN–B): JS1A to JS6A
Series 18 main CPU board: JS1A to JS6A

2 Agitate the absolute pulse coder cable connected to the option 2 board. If an alarm is issued, replace the cable.

Series 16 option 2 board (MAIN–A specification): JF5 to JF8
Series 16 option 2 board (MAIN–B specification): JS1A–2 to JS6A–2
Series 18 option 2 board: JS1A–2 to JS6A–2

3 Replace the servo module.

Replace the module corresponding to the axis indicated by the alarm, as shown in the figure below.Servo module specification: A20B–2902–0060 or A20B–2902–0061

<Location of servo module> Main CPU board

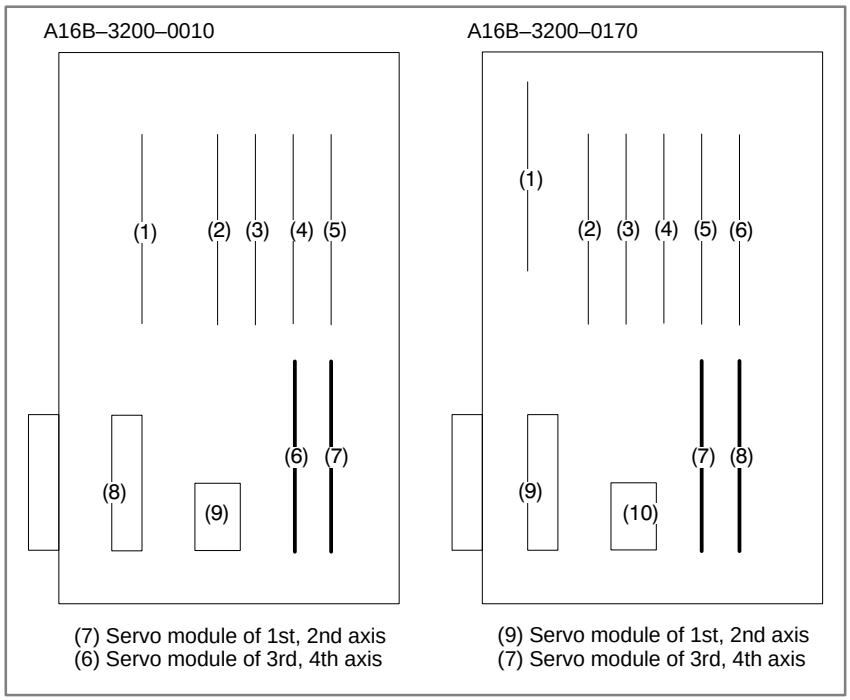

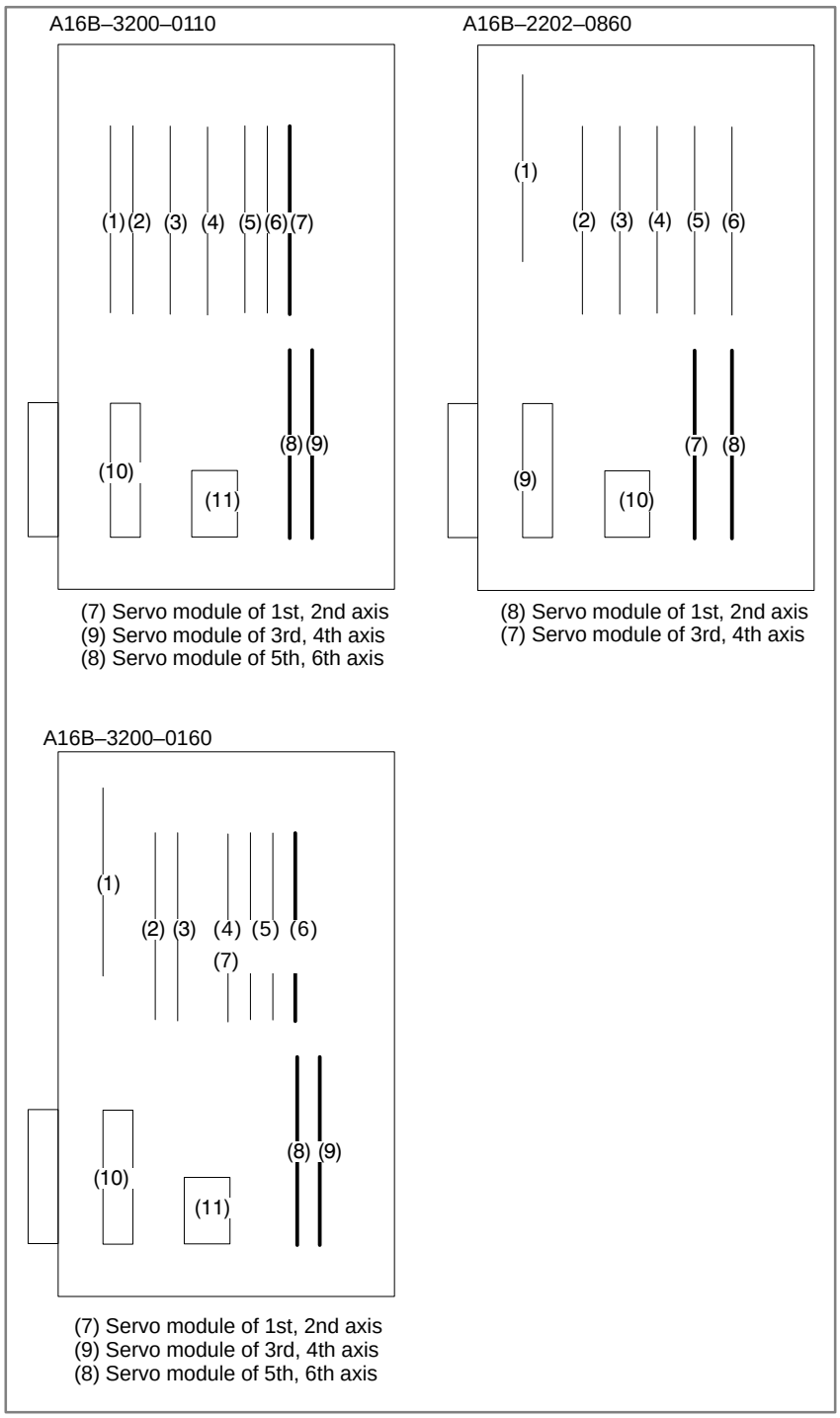

(7) Servo module of 1st, 2nd axis
(9) Servo module of 3rd, 4th axis
(8) Servo module of 5th, 6th axis

(8) Servo module of 1st, 2nd axis
(7) Servo module of 3rd, 4th axis

(7) Servo module of 1st, 2nd axis
(9) Servo module of 3rd, 4th axis
(8) Servo module of 5th, 6th axis

<Location of servo module> Option 2 board

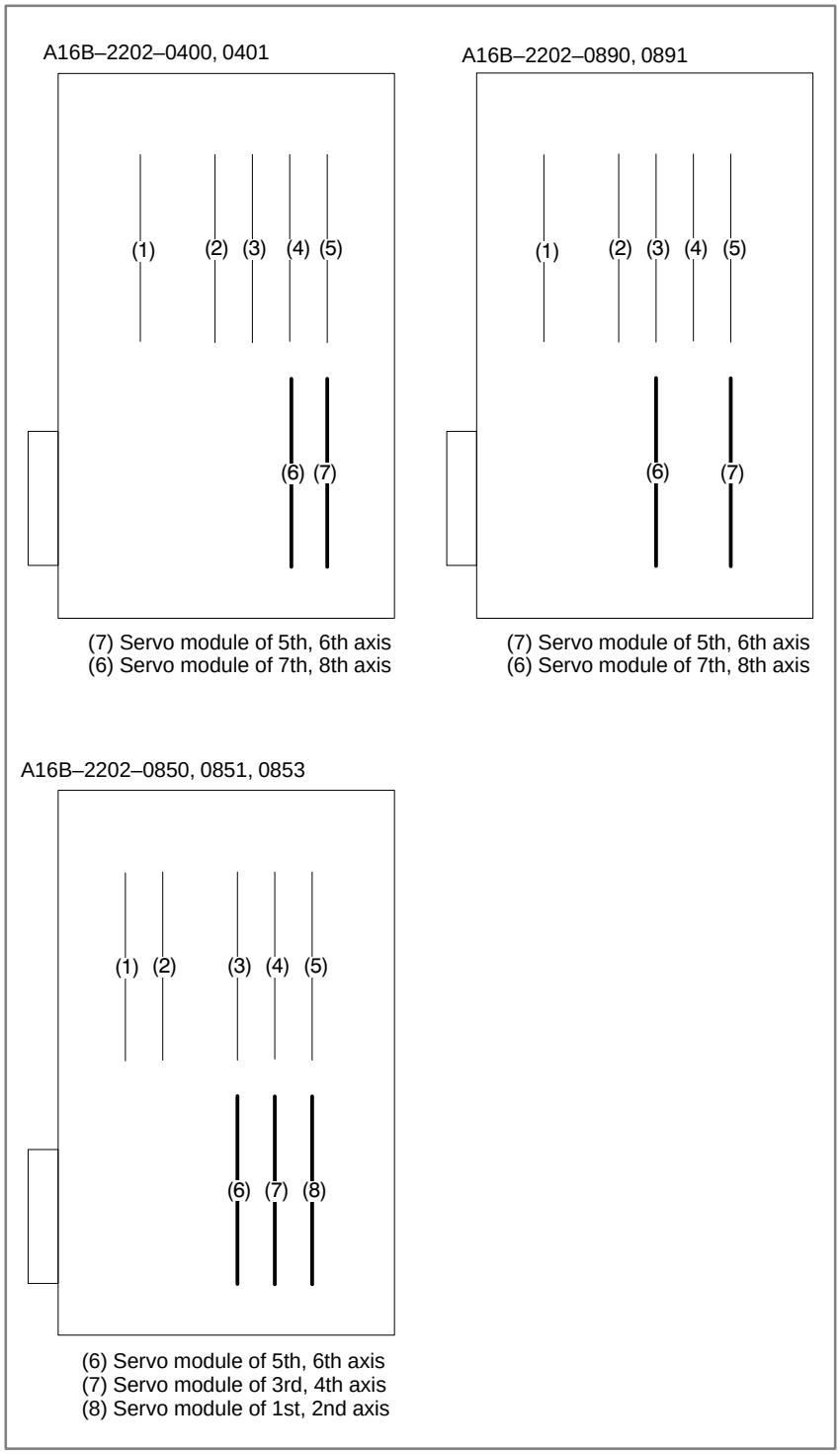

8.14 ALARM 306 TO 308 (ABSOLUTE PULSE CODER BATTERY IS LOW)

This alarm is generated when absolute pulse coder battery becomes low.

Remedies

Exchange the battery connected to the connector JA4A on the main CPU board or the connector JA4B on the option 2 board.

> **Note**
> Change the batteries while power of NC is supplied.
> Do not change the battery (memory backup battery) for the control unit.

Replacing batteries for separate absolute pulse coder

1 Have 4 commercially available dry cell batteries ready.

2 Turn on power of the machine.

If the batteries are replaced with the power on, absolute position of the machine is lost.

3 Loosen the screws of battery case lid and remove the lid.

Consult with the MTB's manual for where the battery case is installed.

4 Replace the batteries in the case.

Take care to place the batteries facing in the correct direction. (Insert the batteries as shown in the diagram with 2 facing one way and 2 the other.)

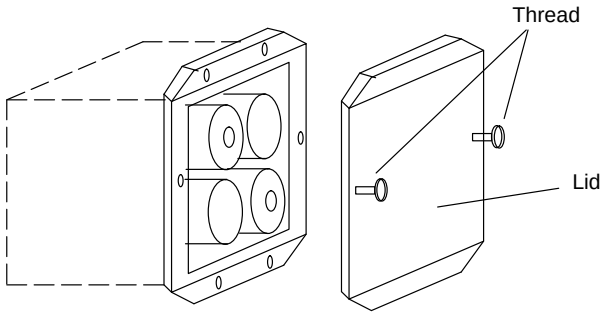

Replacing Dry Cell Batteries

5 Having exchanged the batteries put the lid back on.

6 Turn off the power of the machine.

8.15 ALARM 350 (SERIAL PULSE CODER IS ABNORMAL)

An error is generated in the control section of the serial pulse coder.

Points

1 Alarm No. 351 has also generated⇒Refer to alarm 351.

2 Only alarm No. 350 has generated⇒Refer to the following Confirm the details by diagnostic number 0202 and 0204.

- **When diagnostic number 0202 shows 1**

		#7	#6	#5	#4	#3	#2	#1	#0
DGN	0202		CSA		PHA	RCA		CKA	SPH

#6(CSA) Check sum alarm has generated.

#4(PHA) Phase data abnormal alarm has generated.

#3(RCA) Speed count abnormal alarm has generated.

#1(CKA) Clock alarm has generated.

#0(SPH) Soft phase data abnormal alarm has generated.

1 Check the contens using the above diagnostic function if the alarm generates repeatedly. If diagnostic data is the same, serial pulse coder may be faulty.⇒Refer to **Notes**

2 When diagnostic result does not the same, or other abnormality is detected, an external noise may be generated.

- **When diagnostic number 0204 shows 1**

		#7	#6	#5	#4	#3	#2	#1	#0
DGN	0204				LDA	PMS			

#4(LDA) LED of serial pulse coder is abnormal

#3(PMS) Pulses are not issued correctly by abnormality of serial pulse coder C or feedback cable.

(1) #4(LDA): LED in the serial pulse coder is abnormal.
Serial pulse coder is faulty⇒Refer to **Notes**

(2) #3(PMS): Pulses are not issued correctly by abnormality of feedback cable.

1 Fault of serial pulse coder ⇒Refer to **Notes**

2 Feedback cable is faulty.

Note
Reference position and machine's standard position are different from the ones before, adjust and set them correctly.

8.16 ALARM 351 (SERIAL PULSE CODER COMMUNICATION IS ABNORMAL)

An error is generated in communication with serial pulse coder.

Points

Check the details by the diagnostic function of the CNC.

		#7	#6	#5	#4	#3	#2	#1	#0
DGN	0202		CSA		PHA	RCA		CKA	SPH

#7(DTE) Data error has generated.

#6(CRC) Serial communication error has generated.

#5(STB) Stop bit error has generated.

Causes

1) #7(DTE):Response from serial pulse coder is absent.
   1 Signal cable is disconnected
   2 Serial pulse coder is faulty. ⇒ See note 1.
   3 +5V to the serial pulse coder is lowered.
2) #6(CRC),#5(STB):Serial communication is in faulty
   1 Signal cable is disconnected.
   2 Serial pulse coder is faulty ⇒ See Note 1.
   3 Main CPU board or Option 2 board is faulty ⇒ See Note 2

Notes
1 After the serial pulse coder is changed, reference position or machine's standard point is different from the one before replacement. Therefore reset and adjust it again.
2 All the data stored in memory is lost when the main board is changed. Set NC data again, referring to "chapter 3 data input/output".

8.17 ALARM 400 (OVERLOAD)

Amplifier or overheat of motor is detected.

400 SERVO ALM :X OVERLOAD

⇐ Example of CRT display.
Axis name is also displayed.

Points

Confirm the detail by the diagnostic function of CNC.

		#7	#6	#5	#4	#3	#2	#1	#0
DGN	0200	OVL							

#7(OVL): 1 OVERLOAD ALARM is displayed.

Check details of alarms by DGN 201.

		#7	#6	#5	#4	#3	#2	#1	#0
DGN	0201	ALD							

1	Overheat of servo motor
0	Overheat of servo amplifier

Overheat of servo motor

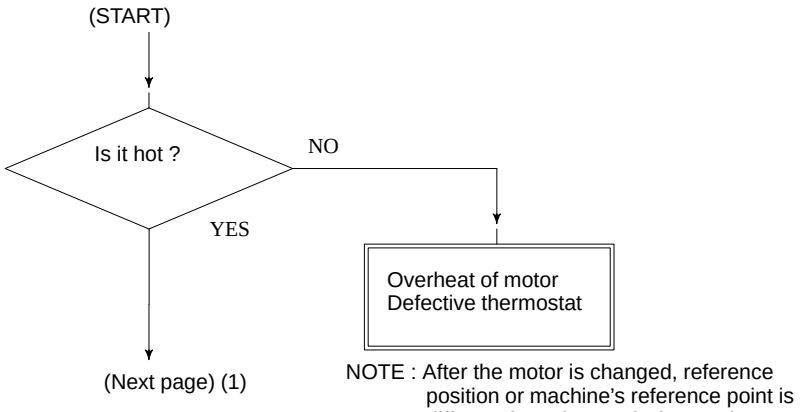

NOTE : After the motor is changed, reference position or machine's reference point is different from the one before replace ment. Set it again.

- **Overheat of servo amplifier**

LED 6 of servo amplifier is lit

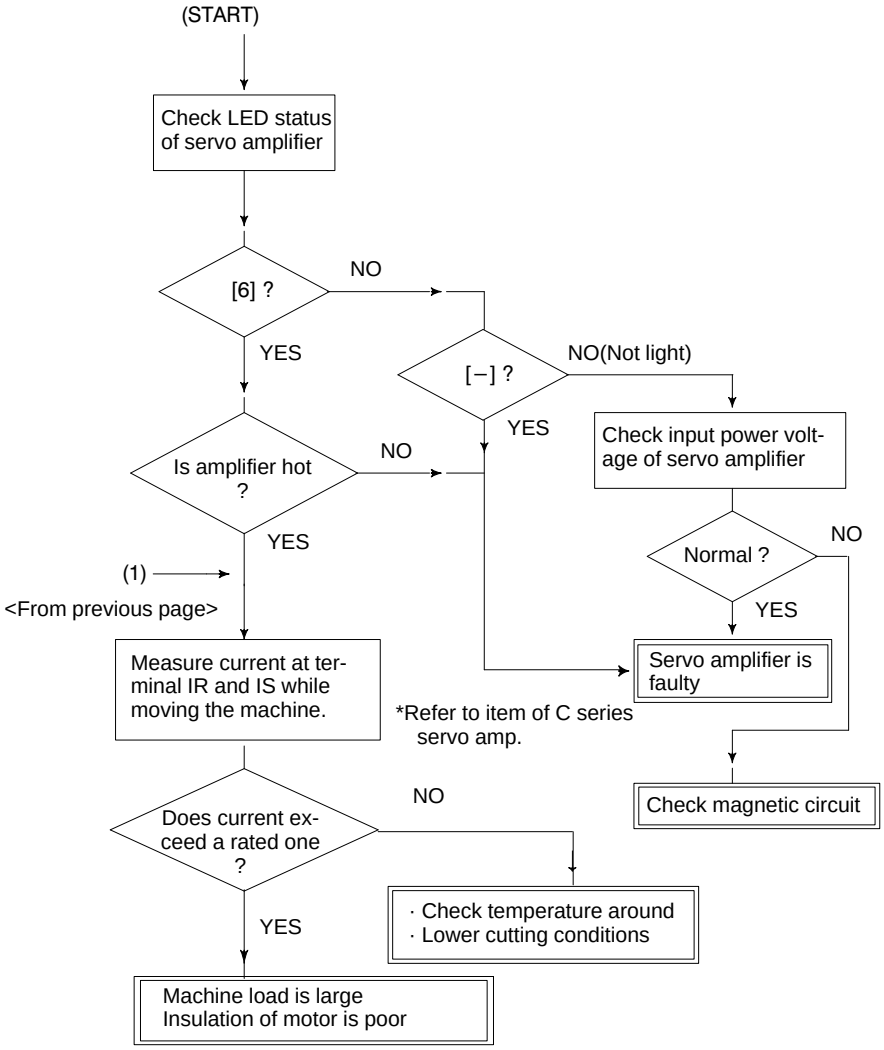

8.18 ALARM 401 (*DRDY SIGNAL TURNED OFF)

Ready signal (*DRDY) of servo amplifier is not turned on or turned off during operation.

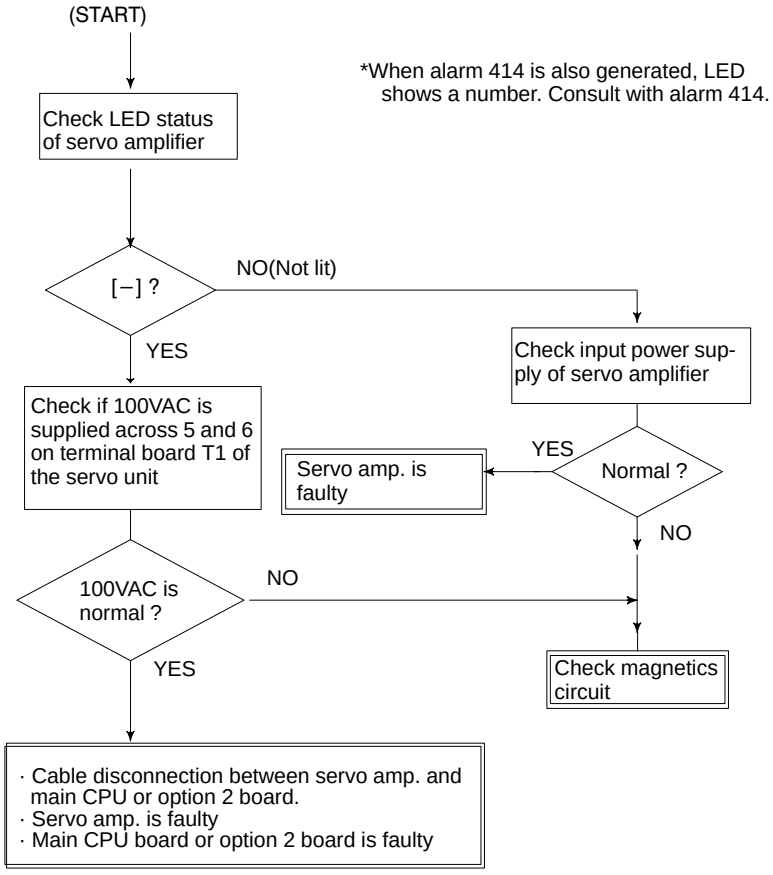

Note

When the main CPU board is replaced, all the data stored in memory is lost. Set NC data again, referring to chapter 3. “Data input/output” .

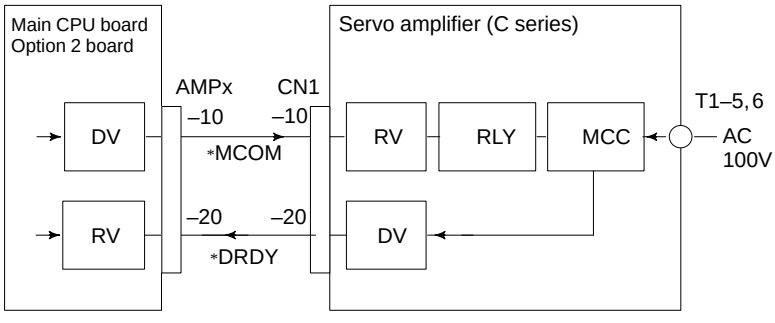

From 1st axis to 4th axis are main CPU board. 5th axis or later are option 2 board.

Power on sequence (NC⇔Servo amplifier)

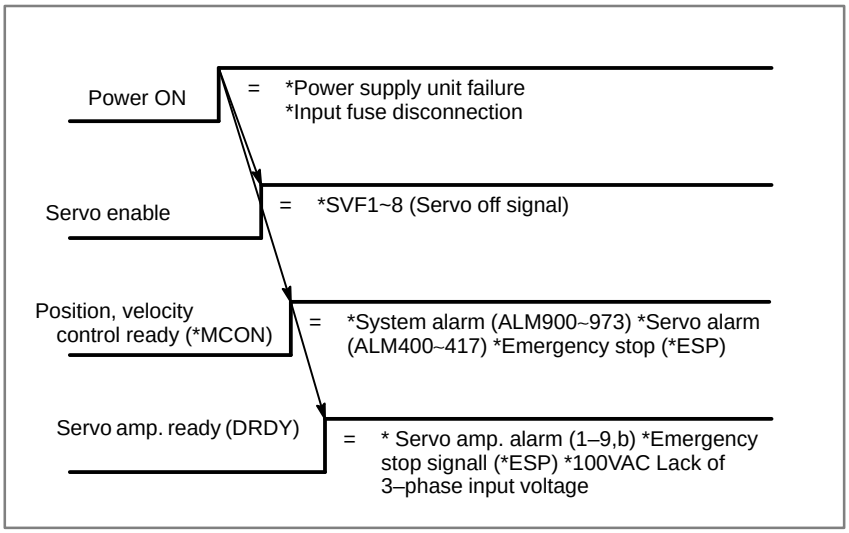

8.19 ALARM 404 AND 405 (*DRDY SIGNAL TURNED ON)

- **Alarm 404**

DRDY signal is turned on before MCON signal is turned on. Or DRDY is not turned off after MCON signal is turned off.

- **Causes**

1 Servo amplifier is faulty.
2 Between servo amplifier and main CPU or between servo amplifier and option 2 board is faulty.
3 Main CPU or option 2 board is faulty.

Note
When the main CPU board is replaced, all the data stored in memory is lost. Set the NC data again, referring to chapter 3 “data input/output”.

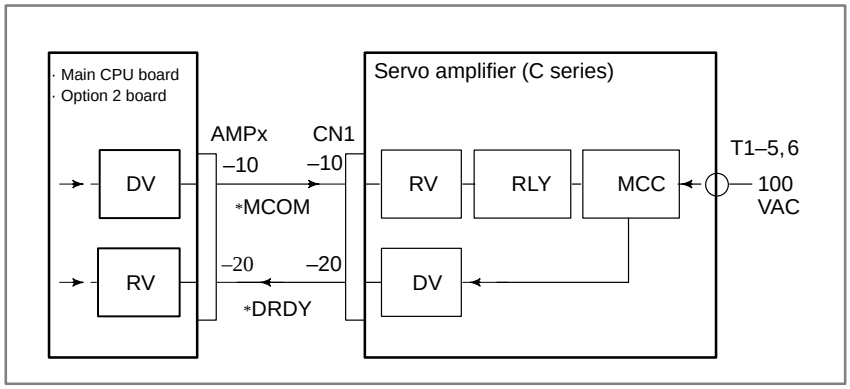

From 1st axis to 4th axis are main CPU board. 5th axis or later are option 2 board.

- **Alarm 405 (Reference positin return is abnormal)**

The grid signal is not turned on when the automatic reference position return by G28 is completed.

- **Causes**

Main CPU board or Option 2 board is faulty.

Note
When the main CPU board is replaced, all the data stored in memory is lost. Set the NC data again, referring to chapter 3 “data input/output”.

8.20 ALARM 410 (EXCESSIVE POSITION ERROR AMOUNT DURING STOP)

Position error amount at stop (DGN 300) exceeds a value set by parameter No. 1829.

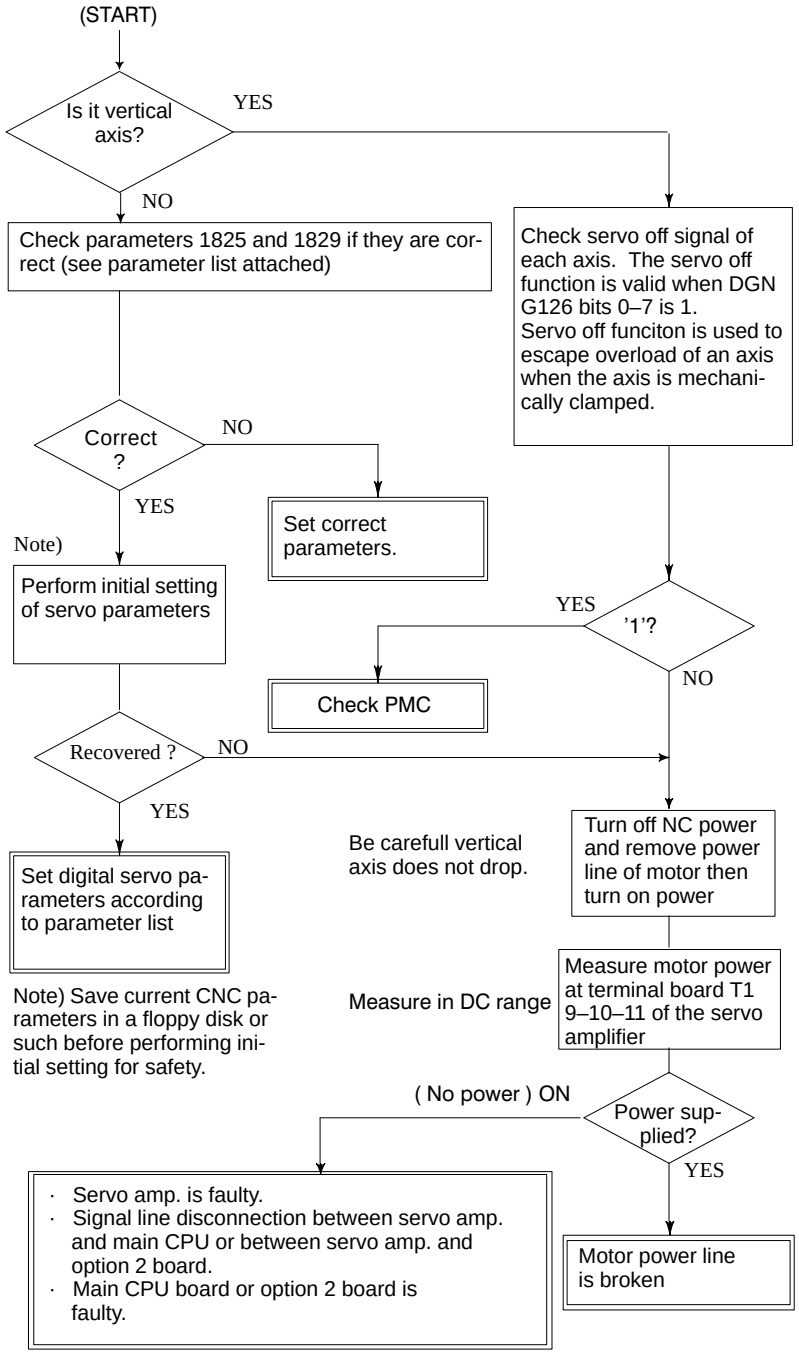

Note

When the main board is replaced, all the data stored in memory is lost. Set NC data again, referring to chapter 3 “data input/output” .

8.21 ALRAM 411 (EXECESSIVE POSITION ERROR DURING MOVE)

Position error amount during movement (DGN 300) exeeeds a value set by parameter 1828.

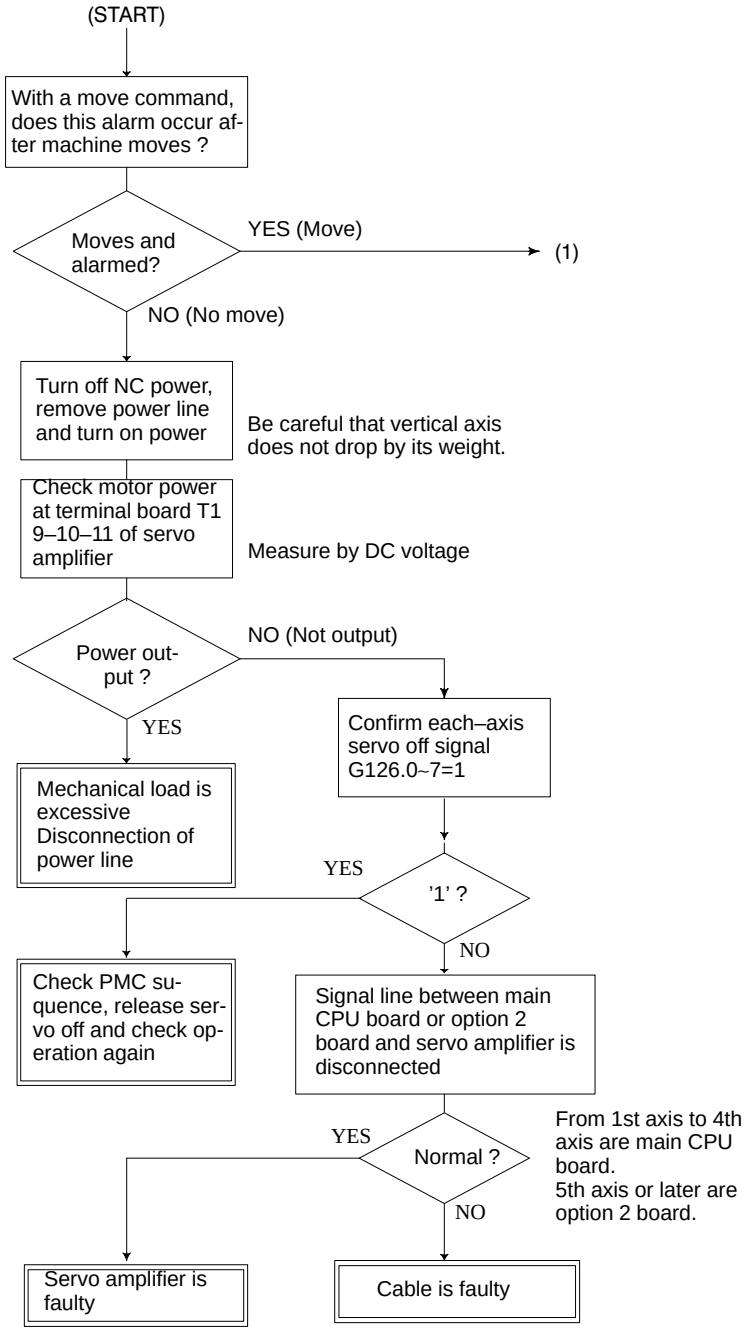

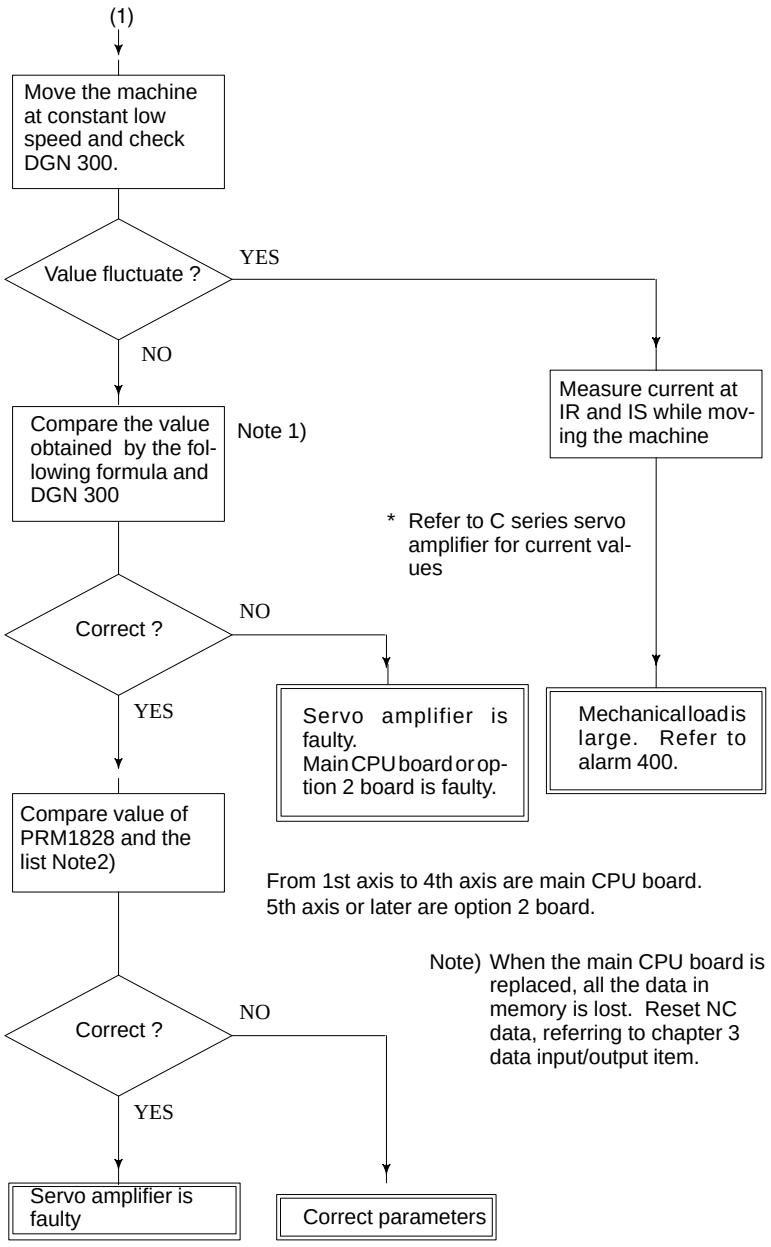

Notes

1 Position error= $\dfrac{\text{Feed rate (mm/min)}}{60 \times \text{PRM1825}} \times \dfrac{1}{\text{Detection unit}}$

2 Parameter 1828 $\geqq$ Position error at rapid traverse $\times 1.2$

8.22 ALARM 414 (DIGITAL SERVO SYSTEM IS ABNORMAL)

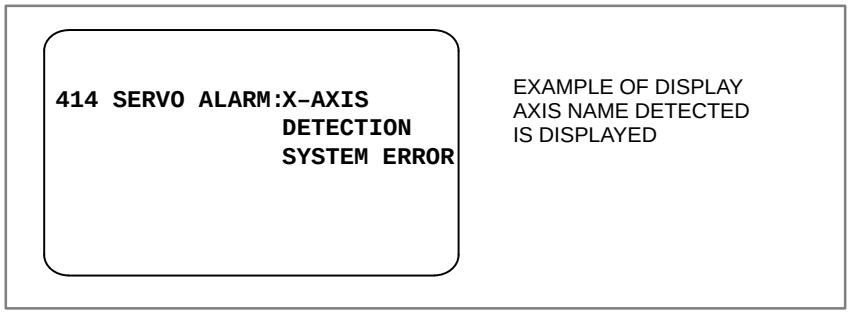

Points

Check details by CNC's diagnostic fucntion and LED display on the servo amplifier.

1

		#7	#6	#5	#4	#3	#2	#1	#0
DGN	0200		LV	OVC	HCA	HVA	DCA	FBA	OFA

2 LED display on the servo amplifier

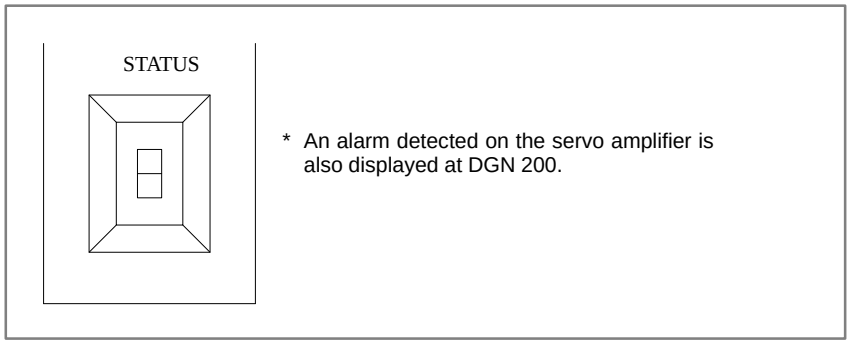

3

		#7	#6	#5	#4	#3	#2	#1	#0
DGN	0204		OFS	MCC					

- **When DGN200 shows "1"**

		#7	#6	#5	#4	#3	#2	#1	#0
DGN	0200		LV	OVC	HCA	HVA	DCA	FBA	OFA

#6(LV): Low voltage alarm → LED [2] or [3] lights
#5(OVC): Over current alarm
#4(HCA): Abnormal current alarm → LED [8] lights
#3(HVA): Over current alarm → LED [1] lights
#2(DCA): Discharge alarm → LED [4] or [5] lights
#1(FBA): Disconnection alarm
#0(OFA): Overflow alarm

- **#6(LV):Insufficient voltage alarm**

1 Servo amp LED [2] turns on (control power shortage)

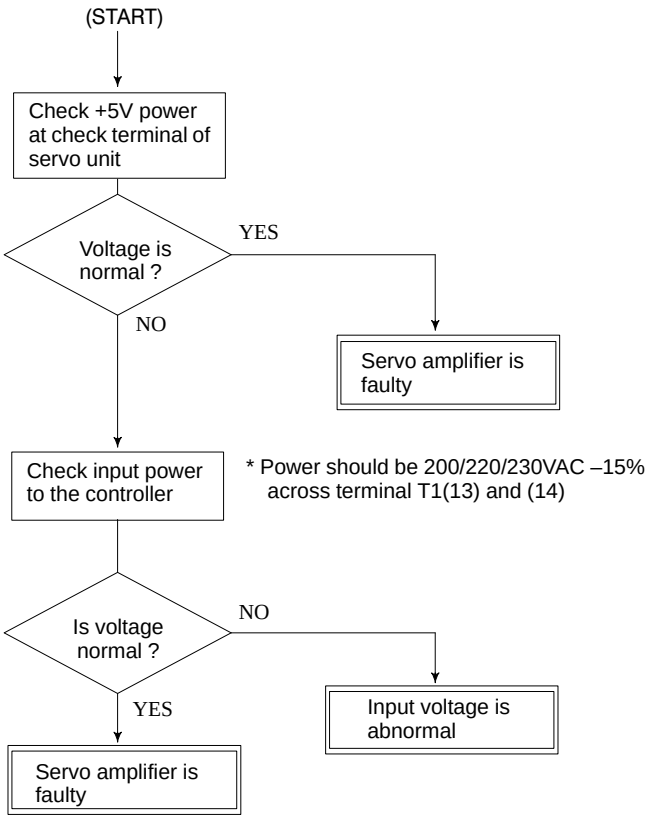

2 Servo amp LED [3] turns on (DC power shortage)

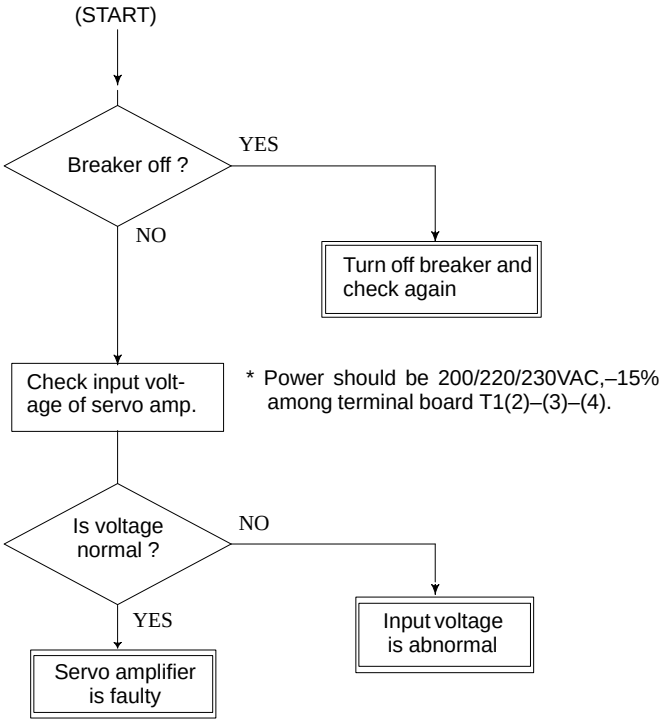

- **#5(OVC):Over current detection by software**

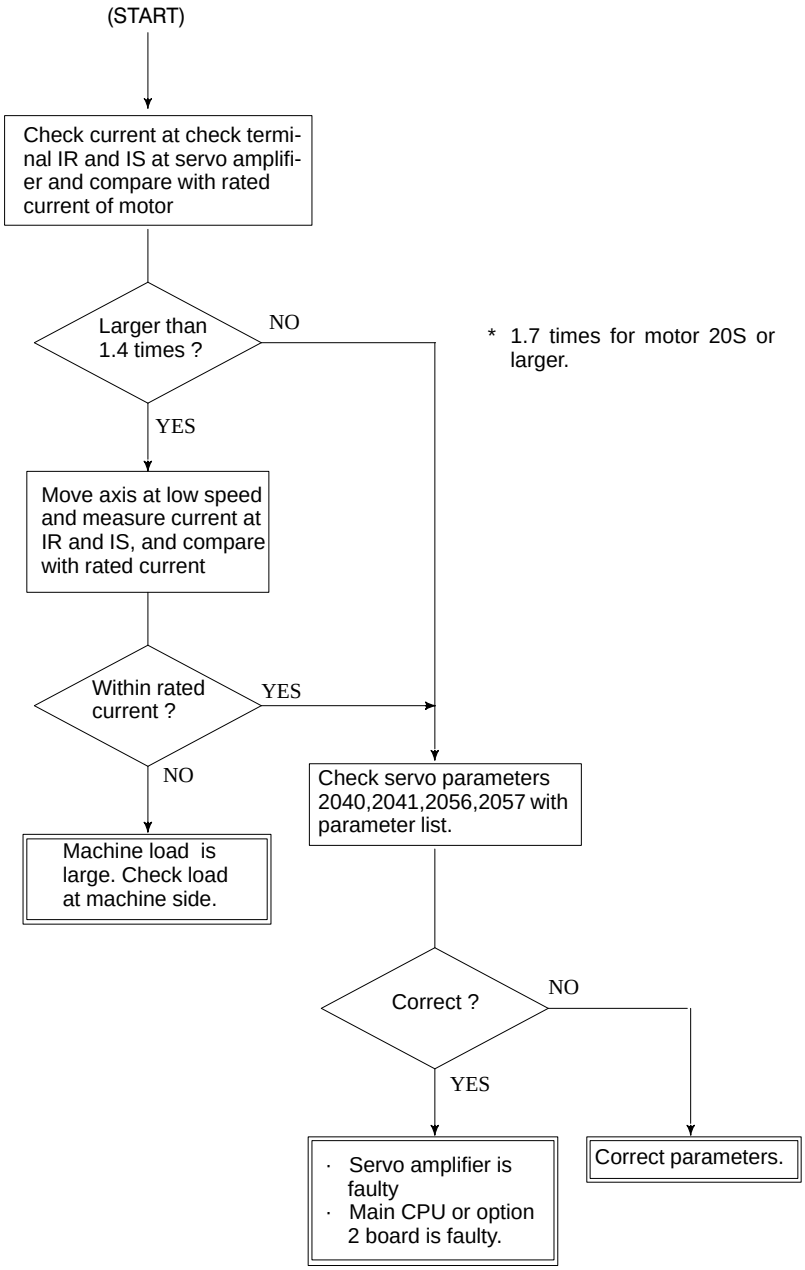

From 1st axis to 4th axis are main CPU board.
5th axis or later are option 2 board.

NOTE : When the main CUP board is replaced, all the data in memory is lost.Reset NC data, referring to chapter 3 ”data input/output” .

- **#4(HCA):Abnormal current alarm (Servo amp. LED:[8] lights)**

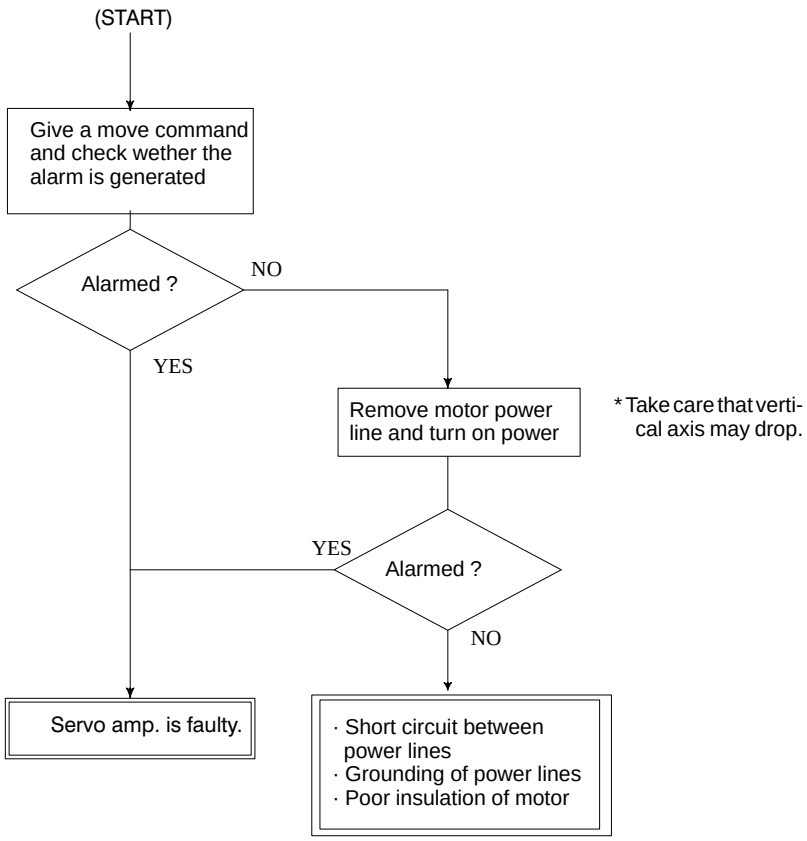

- **#3(HVA):Over voltage alarm (Servo amp.LED [1] lights)**

DC voltage in servo amp. is excessive.

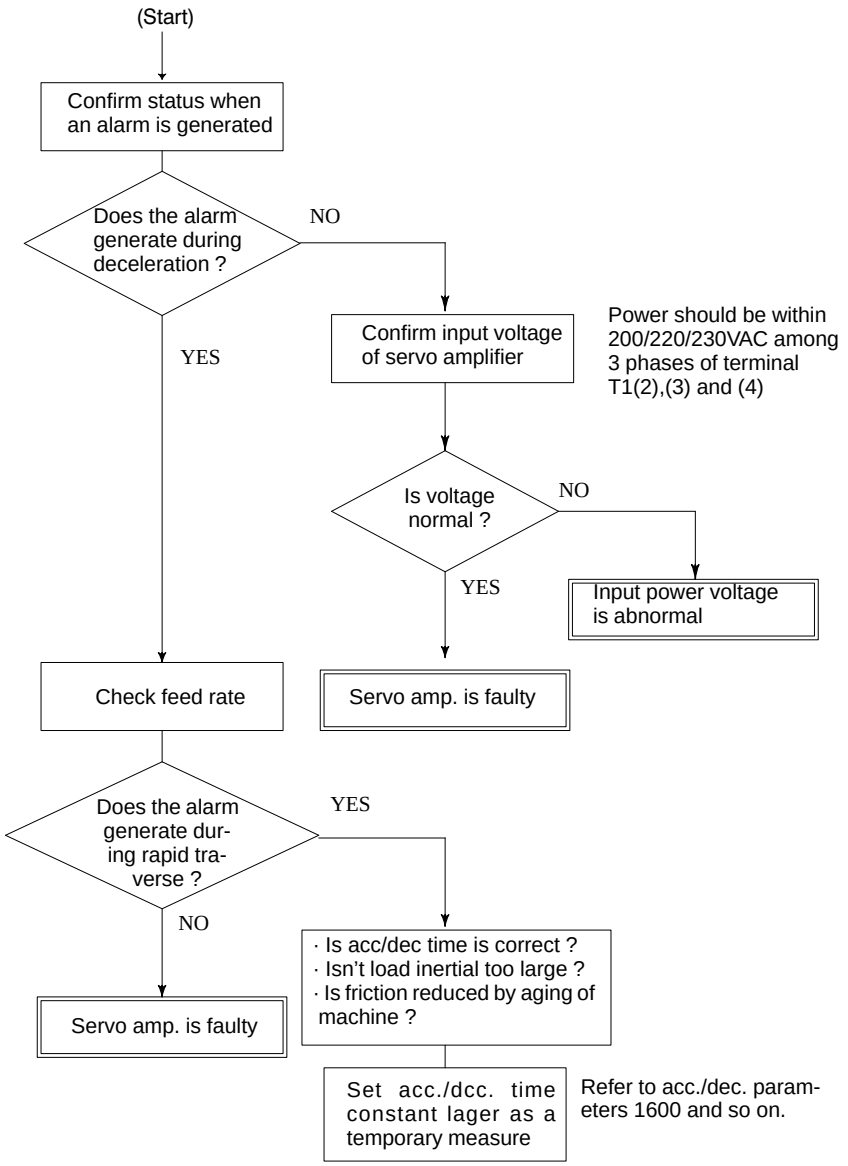

● **#2(DCA):Discharge alarm** 1 Servo amp LED 4 lights (discharge control circuit is abnormal)

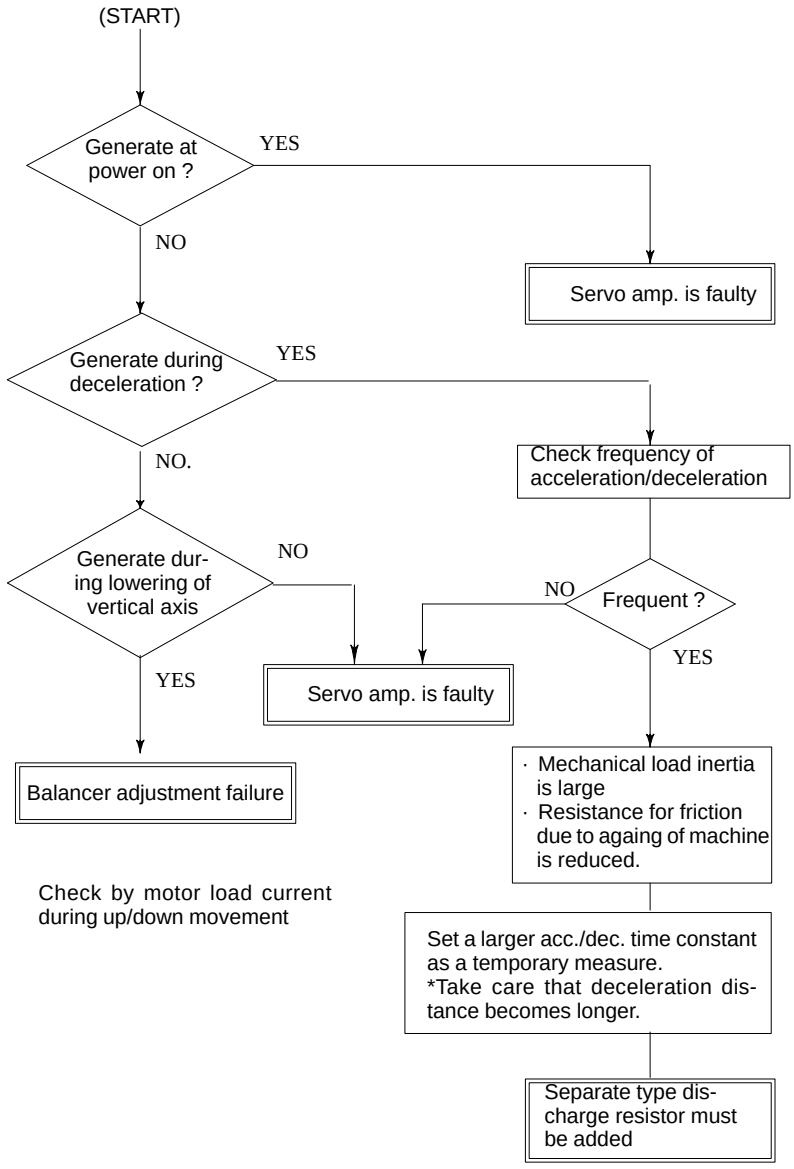

2 Servo amp LED 5 lights (discharge circuit overheat)

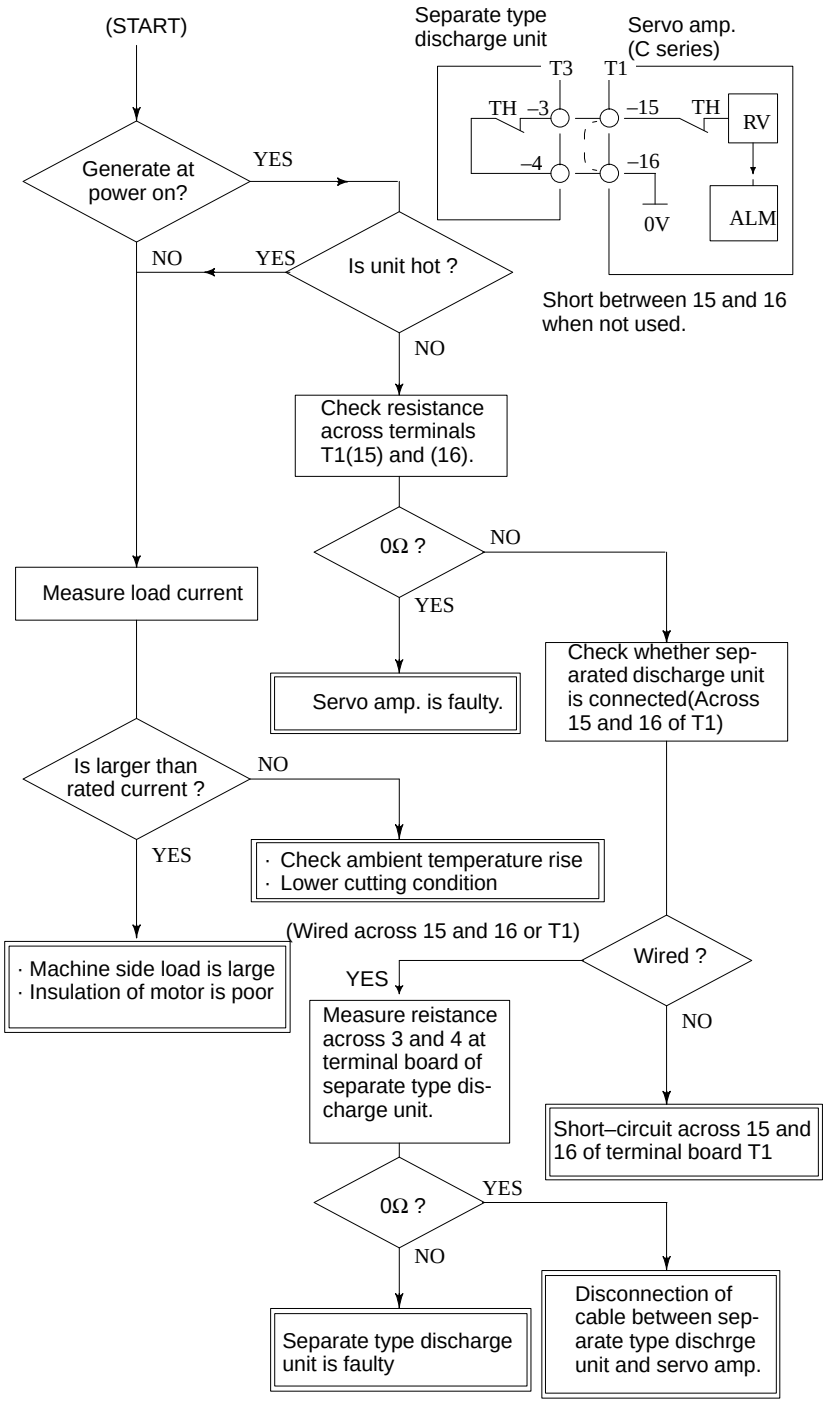

- **#1(FBA):DISCONNECTION ALARM** Position detection signal line is disconnected or short–circuited.

	#7	#6	#5	#4	#3	#2	#1	#0
DGN 0201	ALD			EXP				
	→			→				

1	–	–	0	Built–in serial pulse coder disconnection	→ENC_X
1	–	–	1	Separate type position detector connection	→$SCALE_X$
0	–	–	0	Pulse coder disconnection (software)	Note

Note
This alarm is related with full–closed system.

- **Causes**

1 Signal cable is disconnected or short–circuited
2 Serial pulse coder or position detector is faulty Refer to Notes 1
3 Main CPU board or option 2 board is faulty. Refer to Notes 2

Notes
1 After the pulse coder is replaced, reference position or machine's standard position is different from former one. Adjust and set it correctly.
2 When the main CPU board is replaced, all the data stored in memory is lost. Set NC data again, referring to chapter 3 "data input/output".

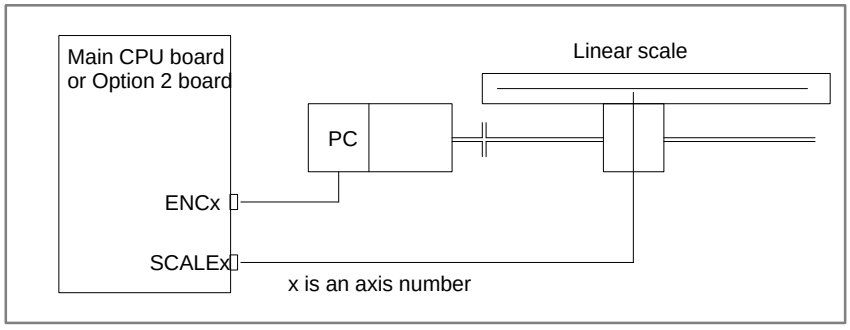

From 1st axis to 4th axis are main CPU board. 5th axis or later are option 2 board.

7)#0(OFA):Overflow alarm

causes

1 Wrong setting of servo parameters 1800s.
2 Main CPU (1axis to 4 axes) or option 2 board (5 axes or more)

> **Note**
> When the main CPU board is replaced, all the data stored in memory is lost. Set NC data again, referring to chapter 3 “data input/output ” .

When 1 is displayed at DGN 204

		#7	#6	#5	#4	#3	#2	#1	#0
DGN	0204		OFS	MCC					

#6(OFS): A/D converter used for current feedback in the digital servo is abnormal.

#5(MCC): Contacts of electromagnetic contactor in the servo amp. is blown.→LED 7 lights.

Serial pulse coder C is an incremental pulse coder.

- **#6(OFS):A/D converter is abnormal**

Main CPU board or option 2 board is faulty
When the main CPU board is replaced, all the data stored in memory is lost.
Set NC data again, referring to chapter 3 ” data input/output ”.

- **#5(MCC):Contacts of electro–magnetic contactor is blown within servo amp.**

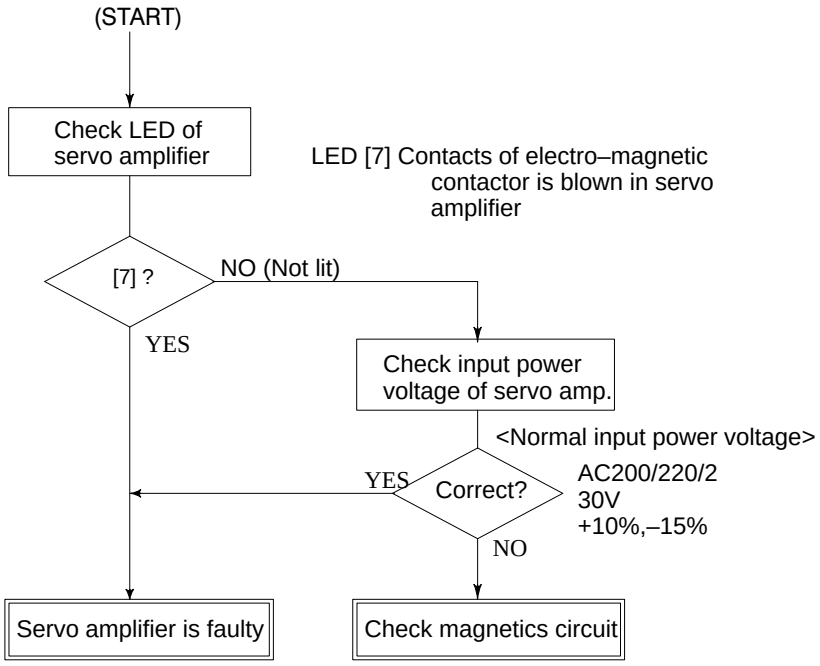

- **LED display**

Display	Meaning	Explanation
	Power off	Power to the servo converter is not supplied.
	NOT READY	Internal MMC (electro–magnetic contactor) is not turned on.
	READY	Internal MMC is turned on and the motor becomes ready.
	HV Excessive voltage alarm	DC voltage for driving main circuit is considerabley high.
	LV5V Control power low alarm	+5V of control power is abnormally low.
	LVDC DC link voltage low alarm	DC voltage for main circuit is extremely low.
	DCSW Abnormal regenerative control circuit	Regenerative discharge energy in short time is large or regenerative discharge circuit is faulty.
	DCOH Excessive regenerative discharge	Average regenerative discharge energy is large or frequency of acc./dec. is large.
	OH Servo amplifier overheat	Lights when thermostat in the servo amplifier functions.
	MCC Electromagnetic contactor	Contacts of electro–magnetic contactor is blown.
	HCL L axis excess current	Lights when a large current flows through the main circuit of L axis.
	HCM M axis excess current	Lights when a large current flows through the main circuit of M axis.
	HCLM Excess current	Lights when a large current flows throught the main circuit of L axis and M axis.

Note) 1st axis is L, 2nd axis is M.

- **LVDC alarm**

When the electro–magnetic contactor is turned on in the servo amp. or DC voltage for the main circuit becomes low, this LED is lit.
Causes are;

1) Input voltage is insufficient.
2) Contacts of electro–magnetic contactor in servo amp. is poor.
3) Power circuit in servo amp. is abnormal.

- **DCSW alarm**

This alarm is lit when the transistor for regenerative discharging turns on more than 1 second.
Its causes are;

1) Mulfunction of servo amplifier such as regenerative discharge circuit.
2) Regenerative discharge energy is excessive due to cutting conditions.

- **DCOH alarm**

This alarm is lit when regenerative discharge registance is overheated and the thermost operates.
Its causes are ;

1) Average discharge energy is excessive due to frequent acc./dec. or no use of balancer in vertical axis
2) Functioning of a thermostat in the power transformer when thermostat signal TH1 and TH2 are connected.

- **MCC alarm**

When turning on MCC, if the contacts are already on.

- **Check terminals on servo amp.**

When you open the cover of the terminal board, you can see the check terminal below LED.

- **Terminal name and meaning**

Terminal name	Meaning
OV	0V
5V	Control power +5V(+5 ± 0.25)
IRL	R–phase motor current of L axis
ISL	S–phase motor current of L axis
IRM	R–phase motor current of M axis
ISM	S–phase motor current of M axis

- **Current/volt**

Type of unit	A/V	Type of unit	(A/V)	
A06B–6066–H002	1	A06B–6066–H222	1/1	Left side L axis/ Right side M axis
A06B–6066–H003	3	A06B–6066–H223	1/3	
A06B–6066–H004	10	A06B–6066–H224	1/10	
A06B–6066–H006	20	A06B–6066–H233	3/3	
		A06B–6066–H234	3/10	
		A06B–6066–H244	10/10	

- **Current waveform**

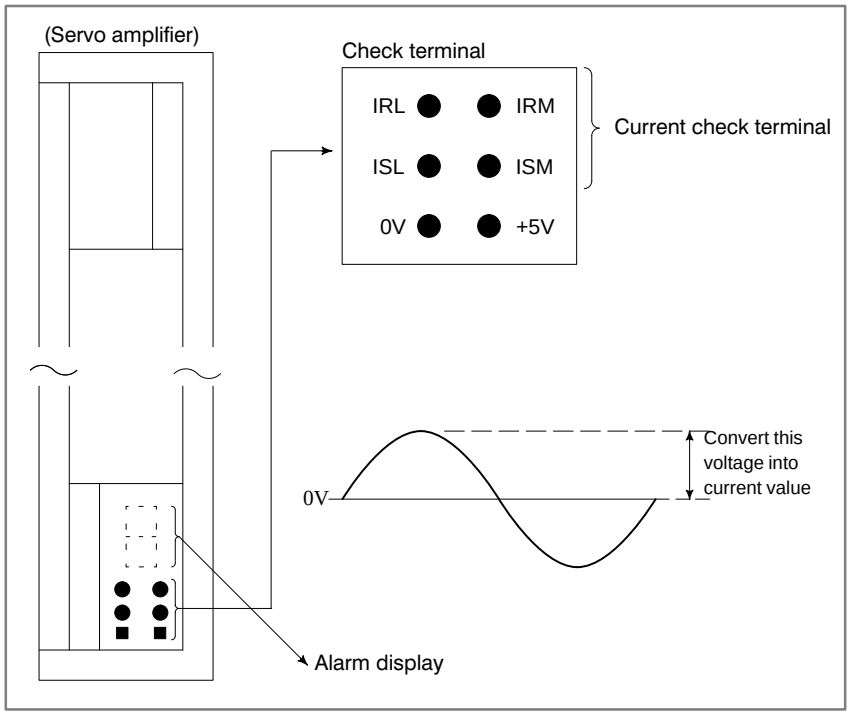

8.23 ALRAM 416 (DISCONNECTION ALARM)

Position detection signal line is disconnected or short–circuited.

Point

Check the details using the CNC's diagnostic fucntion.

	#7	#6	#5	#4	#3	#2	#1	#0
DGN 0201	ALD			EXP				
	→			→				

1	–	–	0	Built–in serial pulse coder disconnection	→ENC_X
1	–	–	1	Separate type position detector connection	→$SCALE_X$
0	–	–	0	Pulse coder disconnec-tion (software)	Note

Note
This alarm is related with full–closed system.

Causes

1 Signal cable is disconnected or short–circuitted
2 Serial pulse coder or position detector is faulty Refer to Note 1
3 Main CPU board or option 2 board is faulty Refer to Note 2

Notes
1 After the pulse coder is replaced, reference position or machine's standard position is different from former one. Adjust and set it correctly.
2 When the main board is replaced, all the data stroed in memory is lost. Set NC data again, referring to chapter 3 " Data input/output" .

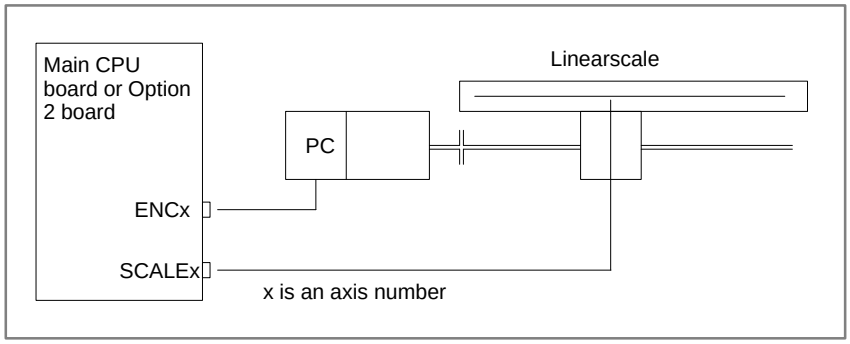

From 1st axis to 4th axis are main CPU board. 5th axis or more are option 2 board.

8.24 ALARM 417 (DIGITAL SERVO SYSTEM IS ABNORMAL)

Digital servo parameters are abnormal.
(Digital servo parameters are set incorrectly.)
When alarm 315 is occured at the same time, check the cause of alarm 351 of section 9.16.

- **Causes**

1 Confirm the setting value of the following parameters:
PRM 2020 : Motor format number
PRM 2022 : Motor rotation direction
PRM 2023 : Number of pulses of velocity feedbacks
PRM 2024 : Number of pulses of position feedback
PRM 1023 : Servo axis number
PRM 2084 : Flexible feed gear ratio
PRM 2085 : Flexible feed gear ratio
Confirm the details with diagnosis function of CNC side.
2 Change the setting of this parameter to 0.
PRM 2047 : Observer parameter
3 Perform initial setting of digital servo parameters.
”Refer to setcion 5.1 ”initial setting of servo parameters” .

This data indicates the cause of servo alarm No. 417, detected by the NC. If the alarm is detected by the servo, the PRM bit (bit 4 of DGN No. 0203) is set to 1.

	#7	#6	#5	#4	#3	#2	#1	#0
0280		AXS		DIR	PLS	PLC		MOT

#0(MOT) : The motor type specified in parameter No. 2020 falls outside the predetermined range.

#2(PLC) : The number of velocity feedback pulses per motor revolution, specified in parameter No. 2023, is zero or less. The value is invalid.

#3(PLS) : The number of position feedback pulses per motor revolution, specified in parameter No. 2024, is zero or less. The value is invalid.

#4(DIR) : The wrong direction of rotation for the motor is specified in parameter No. 2022 (the value is other than 111 or –111).

#6(AXS) : In parameter No. 1023 (servo axis number), a value that falls outside the range of 1 to the number of controlled axes is specified. (For example, 4 is specified instead of 3.) Alternatively, the values specified in the parameter are not consecutive.

8.25 ALARM 700 (OVERHEAT AT CONTROL SIDE)

Because an ambient temperature of the control unit becomes high, a thermostat mounted on the back panel of NC functions and informs an alarm.

Remedies

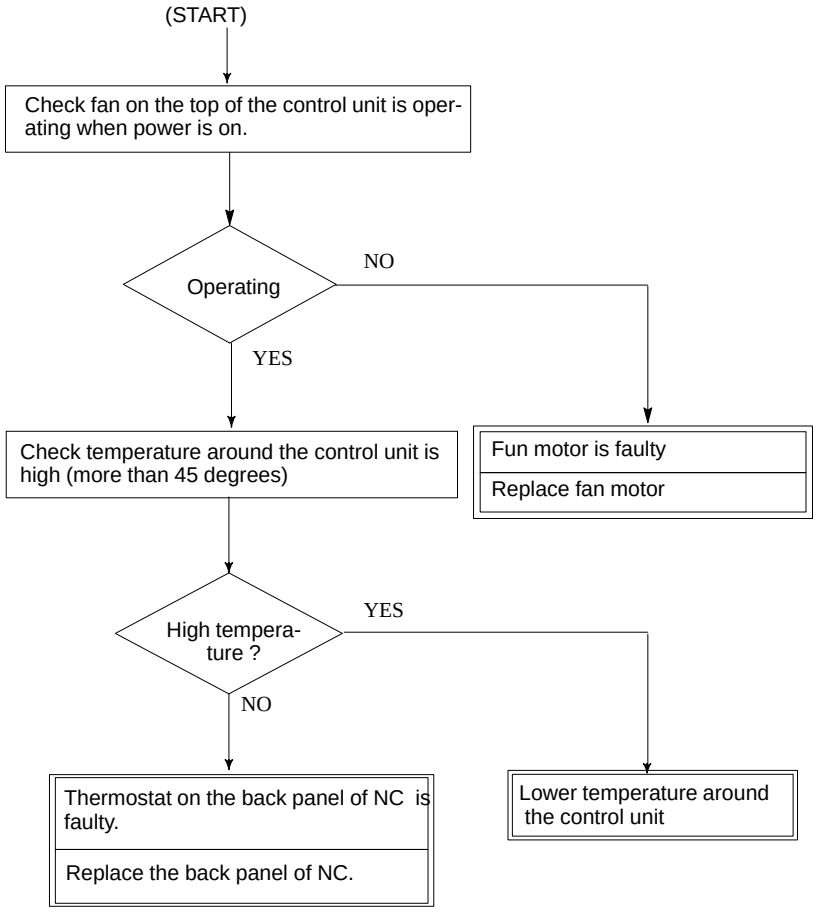

8.26 ALARM 704 (SPINDLE SPEED FLUCTUATION DETECTION ALARM)

Spindle speed changes abnormally due to load.

Remedies

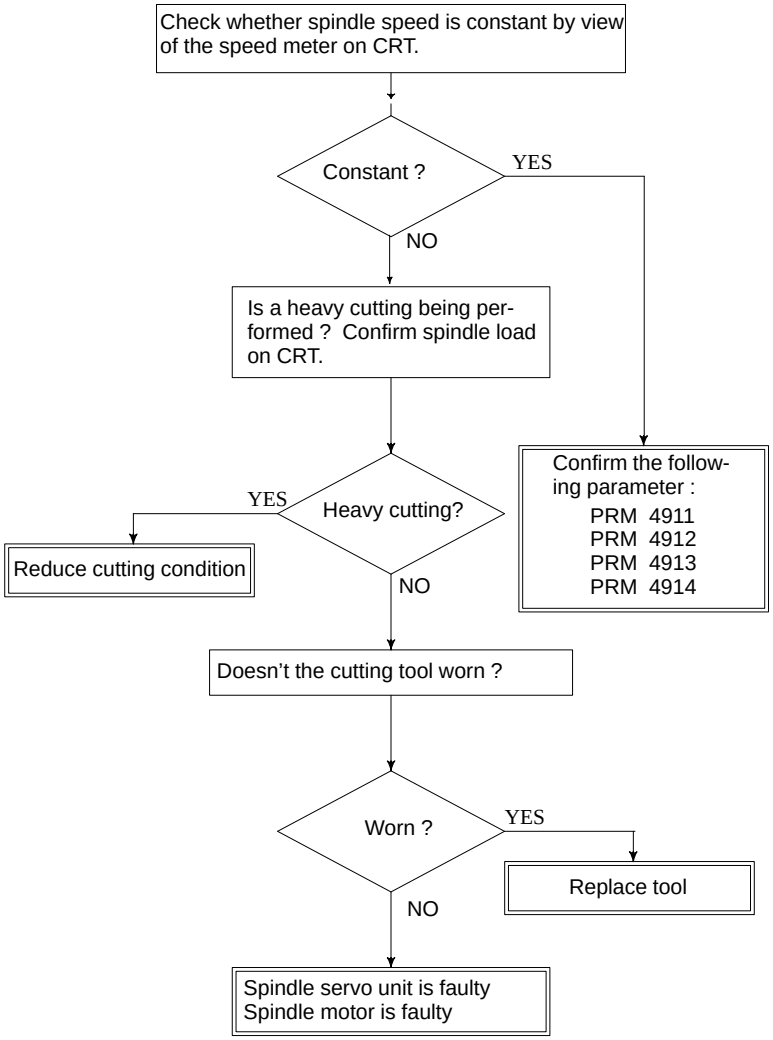

Remedies

PRM 4911 : A ratio of spindle speed at which actual spindle speed is regarded as arrived at a command spindle speed.

PRM 4912 : Spindle speed fluctuation ratio up to which the spindle speed fluctuation detection alarm is not issued.

PRM 4913 : Spindle speed fluctuation that is not regarded as the spindle speed fluctuation alarm.

PRM 4914 : Time when a spindle speed changed to when spindle speed fluctuation detection is started.

8.27 ALARM 749 (SERIAL SPINDLE COMMUNICATION ERROR)

Communication error has generated in serial spindle

Causes and Remedies

Improper connection between the main CPU board and the serial spindle. The following reason is considered.

<Spindle module>
For Series 16 main CPU A20B–2901–0980,0981,0982
For Series 16 option A20B–2901–0984,0985,0986

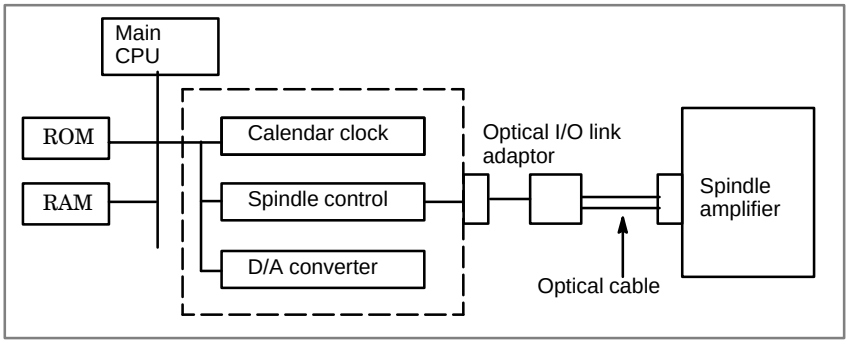

System control module is faulty.(Bold line in the figure below indicates module mounting position.)
A cable between the main CPU board and optical I/O link adapter is disconnected or short–circuited.
Optical I/O link adapter is faulty.
Optical cable is disconnected.
Serial spindle amplifier is faulty.

<Location of spindle module> Main CPU board
Specification of spindle module : A20B–2901–0980 to A20B–2901–0982

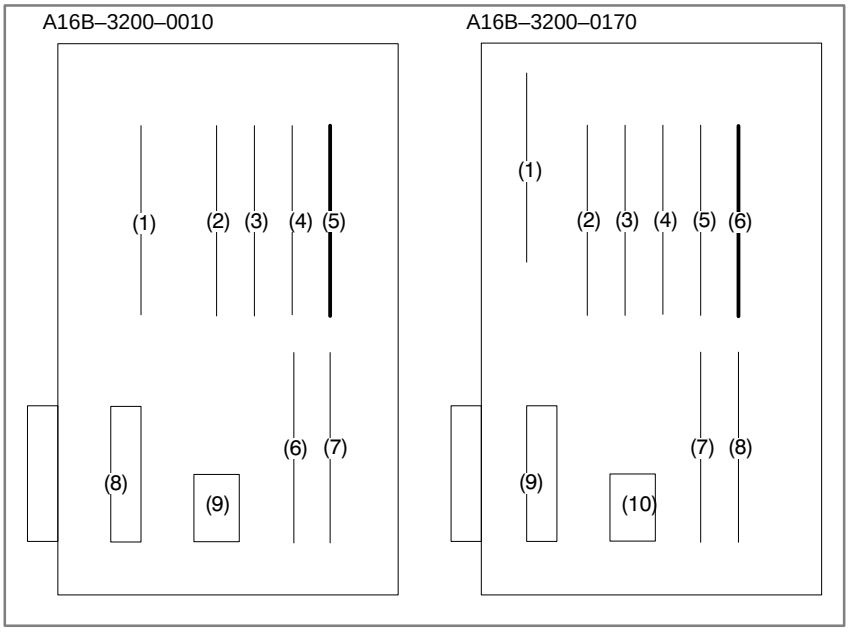

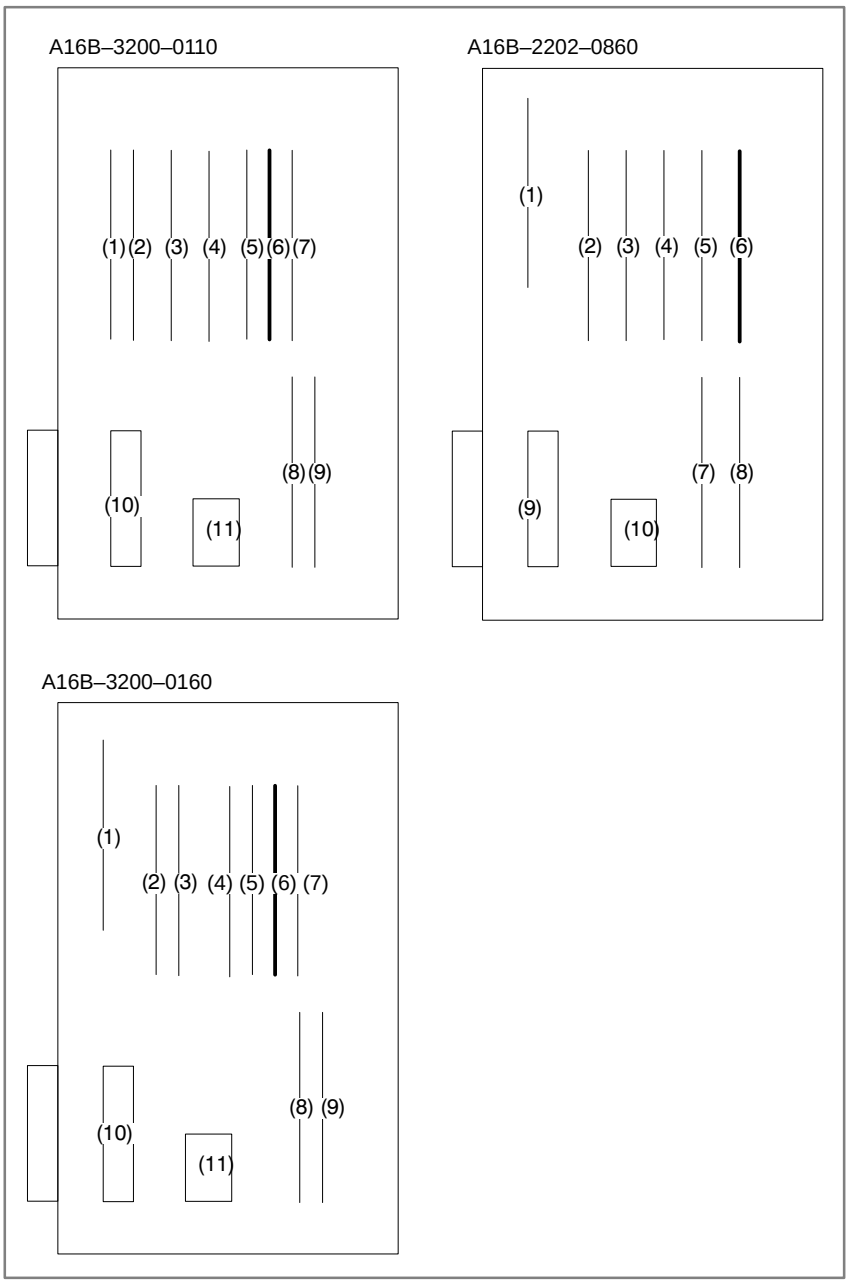
A16B–3200–0110
(1) (2) (3) (4) (5) (6) (7)
(8) (9)
(10)
(11)
A16B–2202–0860
(1)
(2) (3) (4) (5) (6)
(7) (8)
(9)
(10)
A16B–3200–0160
(1)
(2) (3) (4) (5) (6) (7)
(8) (9)
(10)
(11)

<Location of spindle module> Option 2 board
Specification of spindle module : A20B–2901–0984 to A20B–2901–0986

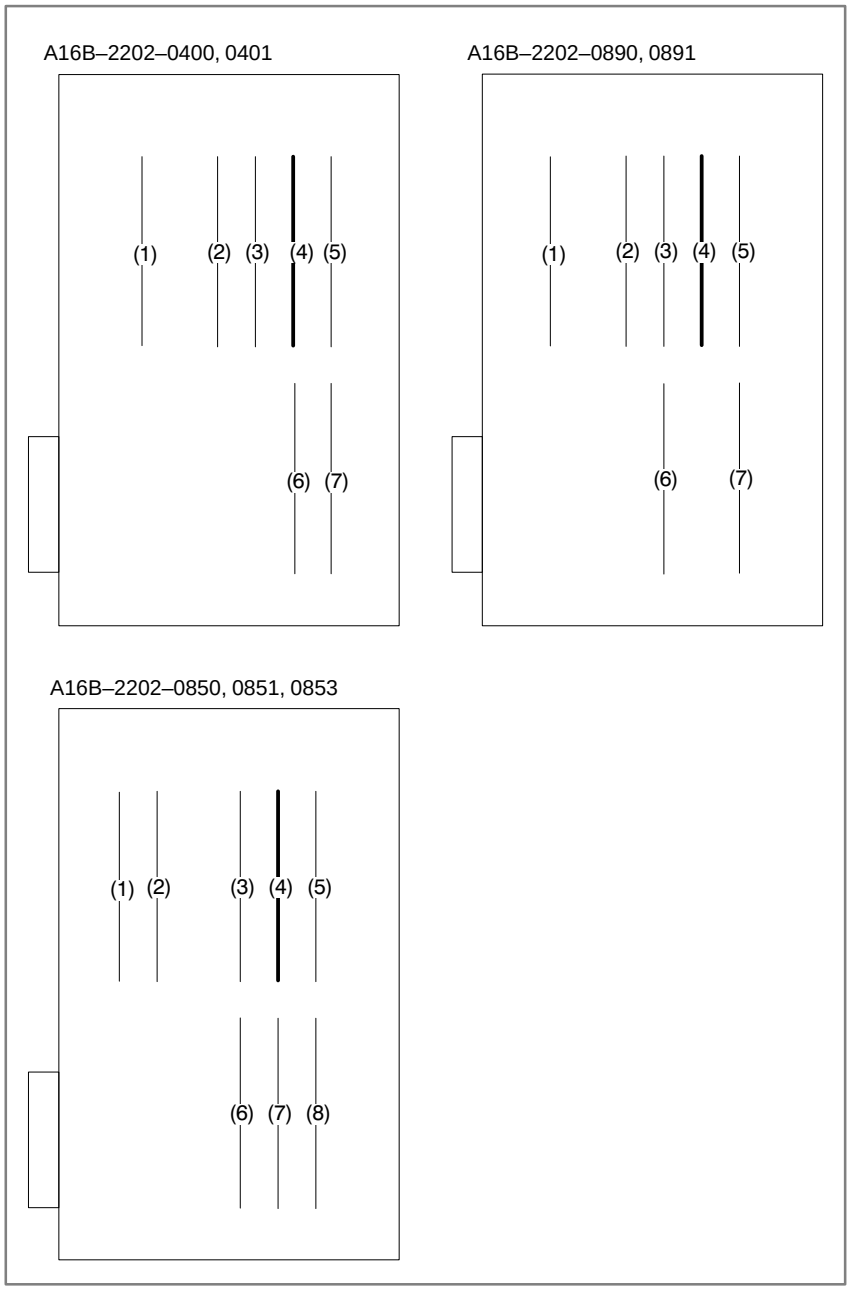

8.28 ALARM 750 (SPINDLE SERIAL LINK CANNOT BE STARTED)

When the spindle amplifier does not become normal state immediately after power is turned on in the serial spindle system, this alarm is informed.

Points

This alarm does not occur once the system becomes ready including the spindle system .
This alarm occurs during power on sequence before the system becomes ready.
After the system becomes ready, serial spindle alarm is issued by alarm 749.

Causes

(1) Optical cable is in poor contact or spindle amplifier power is off.

(2) When display of spindle amplifier shows SU–01 or an alarm other than AL–24 is displayed, power to the NC is turned on.

In this case, this alarm usually occurs when the NC's power is turned off while the serial spindle is operating. Turn off the power of serial spindle once, then turn it on and starts the system.

(3) Combination of hardware is wrong.

(4) When the 2nd spindle is at the state of (1) to (3).

When the 2nd spindle is used, parameter is set as follows :
Bit 4 of parameter no.3701 is 1: No. of serial spindles connected is 2.

Details of Alarms

Confirm the details of troubles on diagnostic 409.

		#7	#6	#5	#4	#3	#2	#1	#0
DGN	0409					SPE	S2E	S1E	SHE

#3(SPE) 0 : In spindle serial control, the serial spindle parameters satisfies the starting conditions for spindle amplifier.

1 : In spindle serial control, the serial spindle parameters do not satisfy the starting conditions for spindle amplifier.

#2(S2E) 0 : At the start of spindle serial control, the spindle is normal.

1 : At the start of spindle serial control, the spindle is abnormal.

#1(S1E) 0 : The serial communication module of the CNC side is normal.

1 : The serial communication module of the CNC side is abnormal.

#0(SPE) 0 : Serial communication module on the CNC side is normal.

1 : Serial communication module was detected to be abnormal on the CNC side.

Remedies

Reform the following countermeasures based on the above configurations:

(1) #3(SPE)1: In spindle serial control, the serial spindle parameters does not satisfy the starting conditions for spindle amplifier.

↓

Confirm the settings of parameters 4000s.
Especially checks the parameters those are changed from the standard parameters.

(2) #2(S2E)1: At the start of spindle serial control, when an abnormality is found in the 2nd spindle side.

↓

Check the 2nd spindle parameters and connections to see whether the spindle is mechanically and electronically connected to the spindle.

↓

If the above settings and connections are right, the module of (4) or the spindle amplifier itself may be defective.

(3) #1(SIE)1: When an abnormality is found in the 1st spindle at the start of serial spindle control, exchange the unit if the following check items are not concerned.

↓

Check the parameters and connections at the 1st spindle to see whether the 1st spindle is mechanically and electrically connected.

↓

If the parameters and connections are correct, the system control module shown below or the spindle amplifier itself is faulty.

(4) #0(SPE)1: The serial communication module is detected to be abnormal. Exchange the following module :

<Location of spindle module> Main CPU board
Specification of spindle module : A20B–2901–0980 to A20B–2901–0982

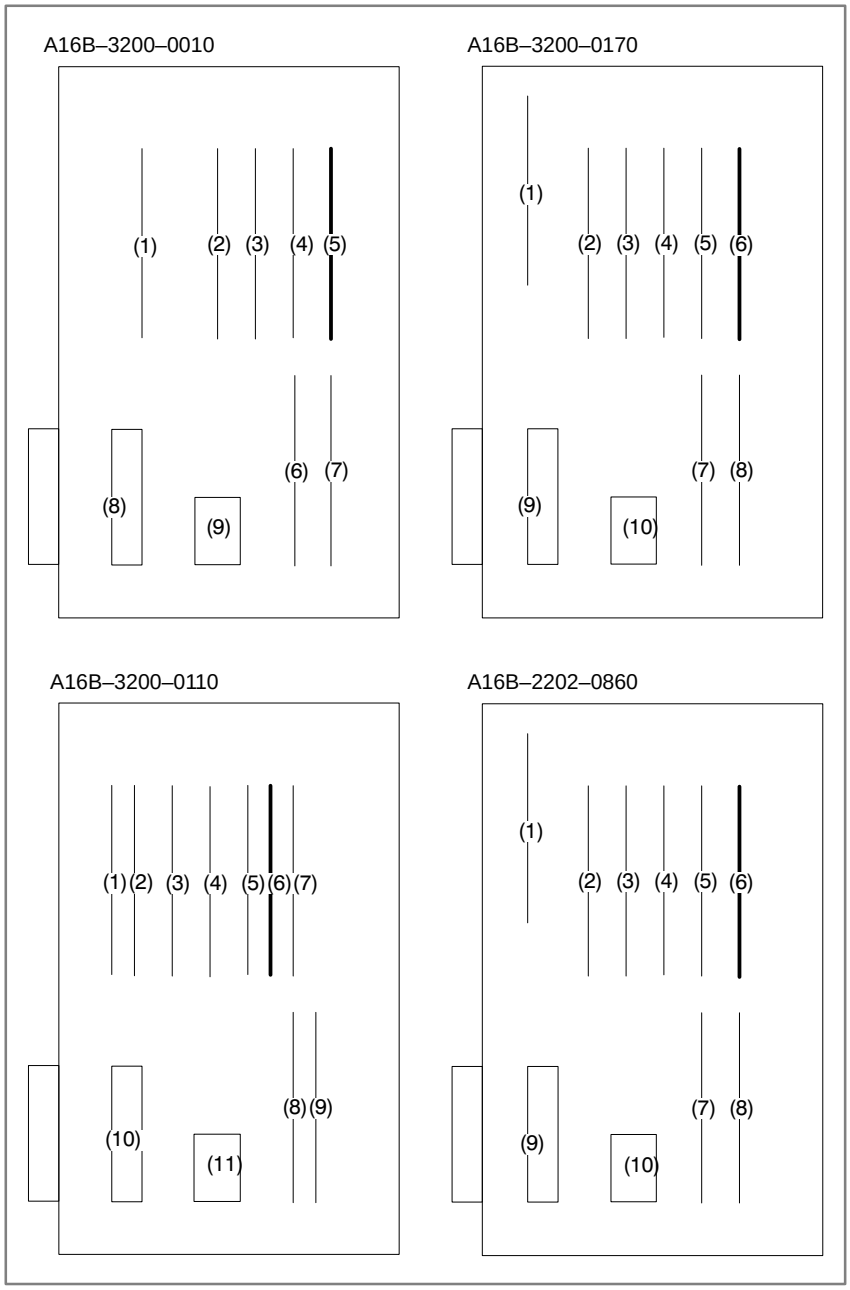

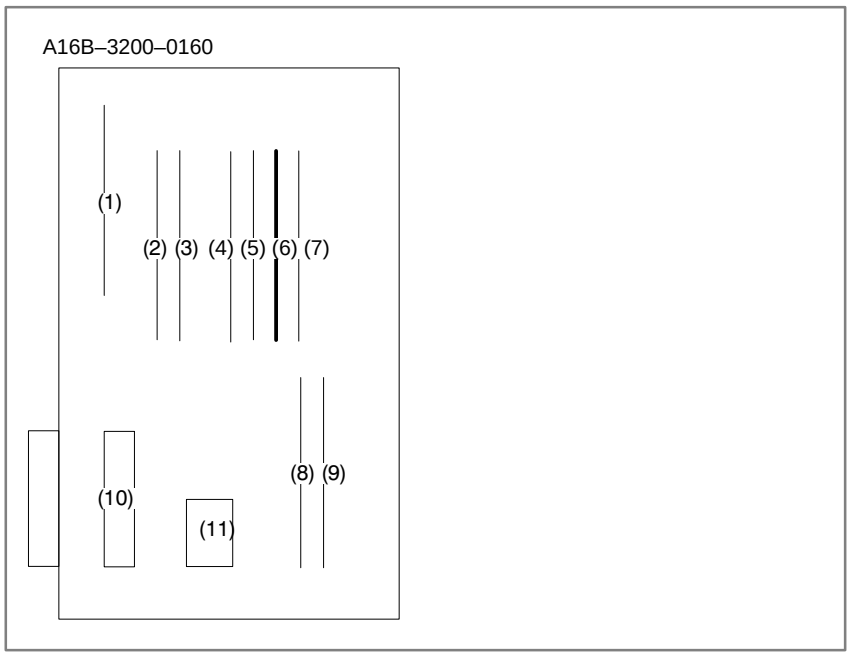
A16B–3200–0160
(1)
(2) (3) (4) (5) (6) (7)
(8) (9)
(10)
(11)

<Location of spindle module> Option 2 board
Specification of spindle module:A20B–2901–0984 to A20B–2901–0986

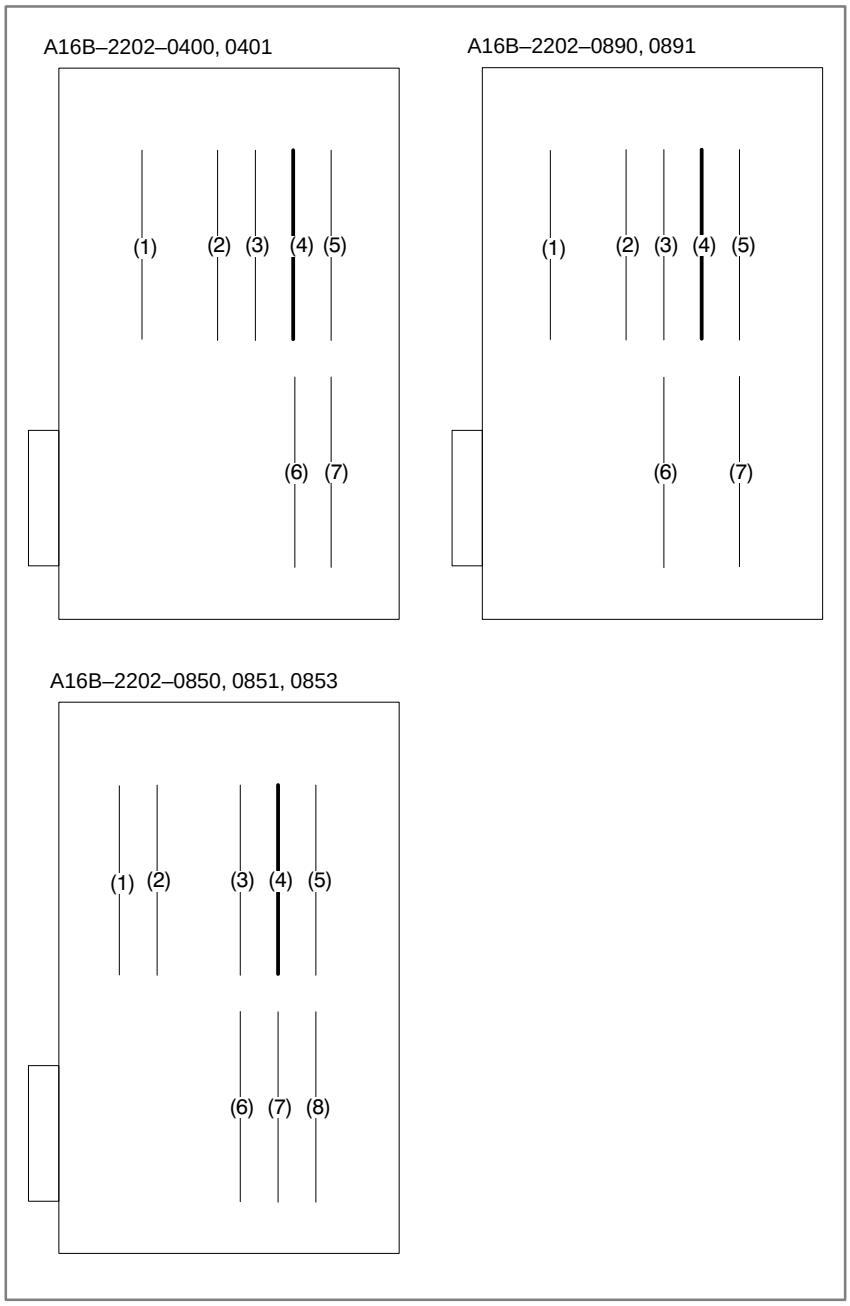

8.29 ALARM 751,761 (SPINDLE ALARM)

With serial spindle system, an alarm on the spindle unit is informed to the CNC.
751 (Alarm detection by 1st spindle)
761(Alarm detection by 2nd spindle)
The alarm contents is displayed by AL–xx on the display of spindle amp.
Refer to appendix 2.3 or 2.4 for the contents.
The CNC holds an alarm number display (AL–xx).

- **Point**

This alarm informs of trouble of spindle control unit.
Repair the spindle side by the method of remedy for each alarm.

- **Causes and Remedies**

Refer to Appendix 2.3 or 2.4 for details.

8.30 ALARM 900 (ROM PARITY ERROR)

ROM parity error occurred.

Causes and Remedies

(1) ROM module mounted on the main CPU board or ROM is defective.

```
SYSTEM ALARM                                B0A1–02


900  ROM PARITY


CNC  ROM MODULE : FC0
                                  Defective file
                                  or ROM is displayed

MACRO ROM MODULE
SERVO ROM
```

Confirm the series and versions of control software those are displayed on upper right of the screen.
*FROM module may be written data by machine tool builder.
*Mounting position of ROM/FROM module

<Main CPU board>

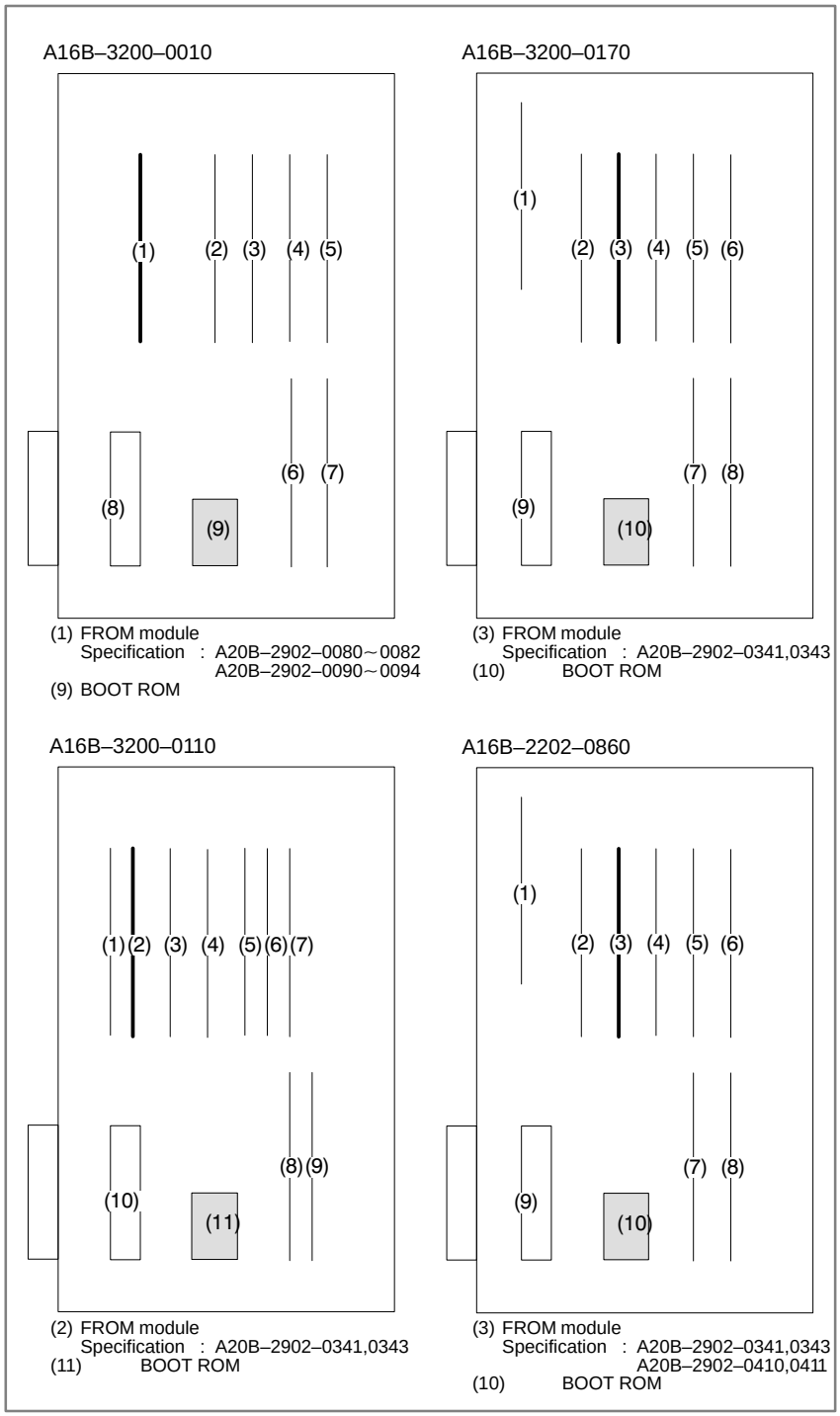

A16B–3200–0160

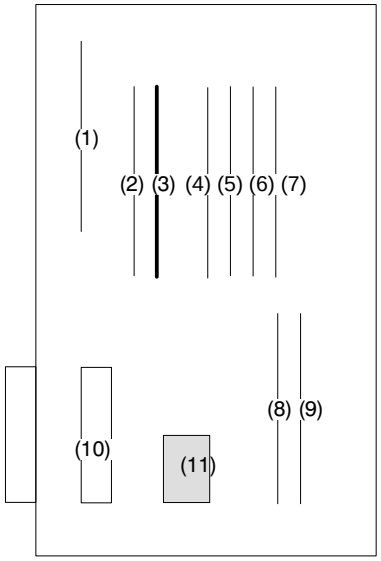

(2) FROM module
Specification : A20B–2902–0341,0343
A20B–2902–0410,0411
(11) BOOT ROM

8.31 ALARM 910 TO 915 (SRAM PARITY)

Parity error of RAM module that stores part programs.

Points

A parity bit is prepared for writing data in memory correctly. There are odd–number parity and even–number parity.

#7	#6	#5	#4	#3	#2	#1	#0	#P	
1	0	1	1	0	1	1	1	0	(Parity bit) (Even–number parity)

Causes and Remedies

(1) Causes are faults of RAM on the main board or RAM module, or fault of data memorized in RAM. When this alarm occurs immediately after power is turned on, once turn off power, then turn on power while pushing RESET and DELETE key to perform memory all clear

If parity error is not released by clearing all memory, RAM on the main board or RAM module may be faulty. Change (4)RAM module on main CPU board.
Set all the data again, referring to chapter 3 “data input/output”.

- **RAM module mounting position**

1 : SRAM module (Part program editing, parameters)

<Main CPU board>

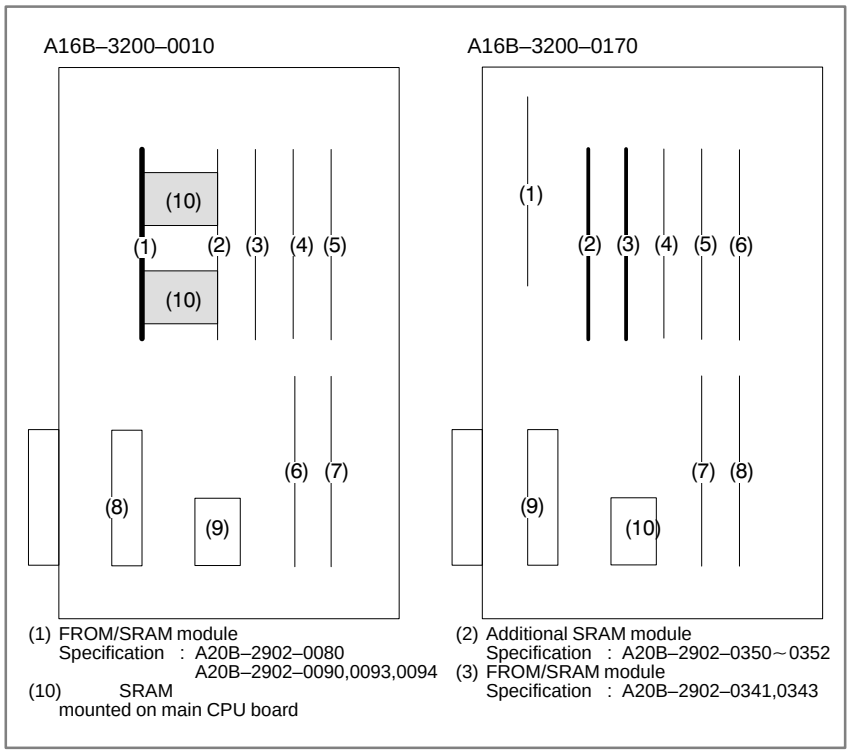

A16B–3200–0110

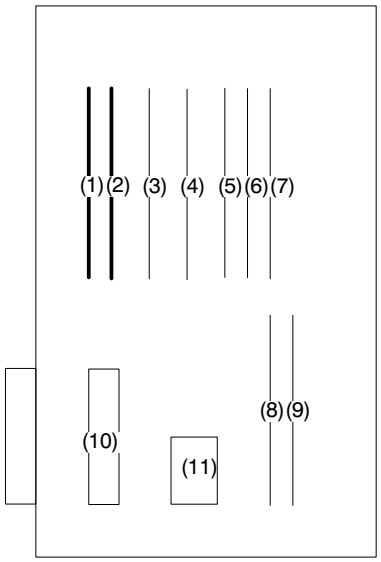

(1) Additional SRAM module
Specification : A20B–2902–0350～0352
(2) FROM/SRAM module
Specification : A20B–2902–0341,0343

A16B–2202–0860

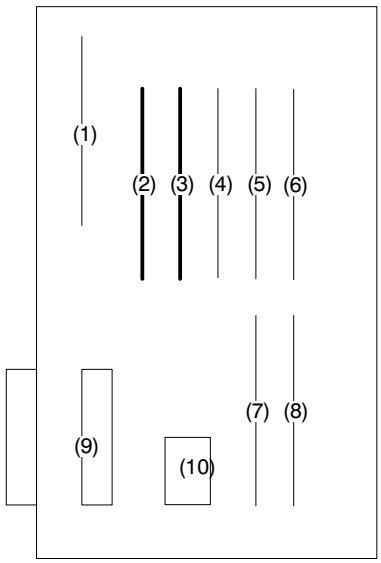

(2) Additional SRAM module
Specification : A20B–2902–0350～0352
FROM/SRAM module
Specificaiton : A20B–2902–0341,0343
A20B–2902–0410,0411

A16B–3200–0160

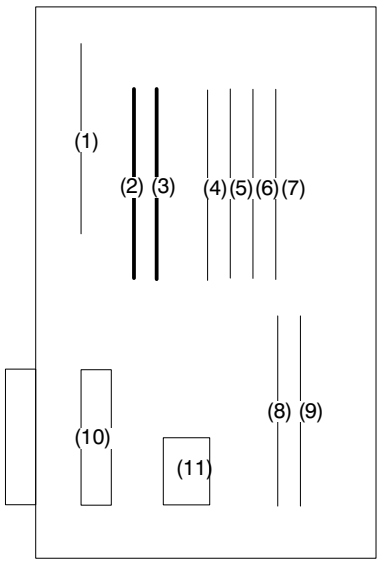

(1) Addition SRAM module
Specification : A20B–2902–0350～0352
(10) FROM/SRAM module
Specification : A20B–2902–0341,0343

(2) Low voltage of memory back up battery. Battery alarm occurs if voltage is 2.6V or less (3.0V rating).

When the memory back up battery voltage is lowered, BAT is displayed at lower part of the screen.

When battery alarm is lit, replace with new lithium batteries as soon as possible.

Refer to 2.8 battery replacing item and change the batteries.

(3) Power supply unit is faulty

When alarm turns off by an operation of clearing all the memory, power supply unit may also be faulty.

8.32 ALARM 916 (DRAM PARITY ERROR)

A parity error occurred in the DRAM module.

Cause and action

The DRAM module on the main CPU board may be faulty. Replace the DRAM module.

<Location of DRAM module> Main CPU board
Specification: A20B–2901–0940 ~ 0942

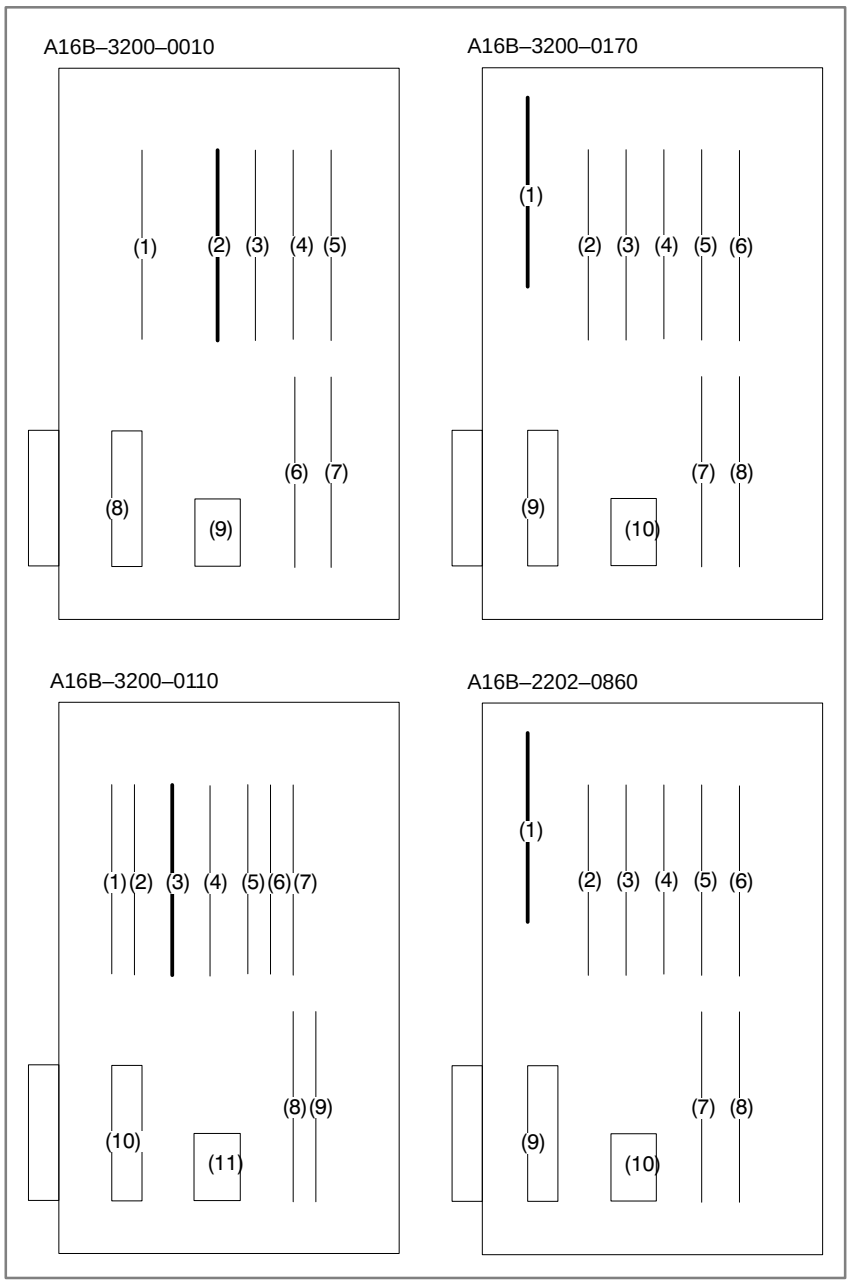

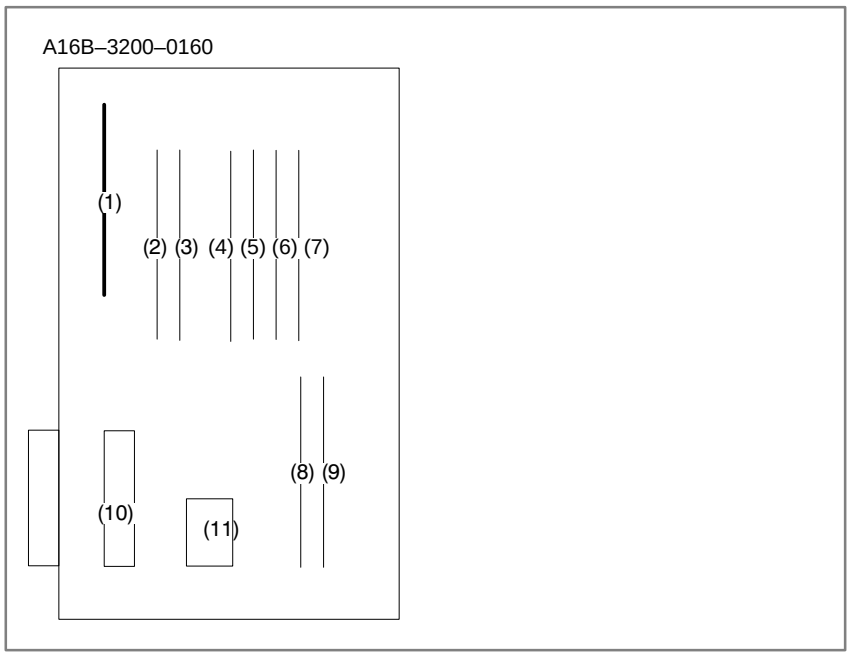
A16B–3200–0160
(1)
(2) (3) (4) (5) (6) (7)
(8) (9)
(10)
(11)

8.33 ALARM 920 TO 923 (WATCH DOG OR RAM PARITY)

920: Watch dog alarm or RAM parity in servo control module has occurred in the 1st or 2nd axis
921: Above alarm has occurred in the 3rd or 4th axis
922: Above alarm has occurred in the 5th or 6th axis
923: Above alarm has occurred in the 7th or 8th axis

points

- **Watch dog timer alarm**

The timer used to monitor the operation of CPU is called the watch dog timer. The CPU resets timer time every time a constant time has passed. When an error occurs in CPU or peripheral device, timer is not reset but the alarm is informed.

- **RAM parity error**

Refer to alarm 910 to 915

Causes and Remedies

- **Servo control module is faulty**

The servo module includes servo RAM, watch dog timer circuit, etc. Defectiveness of hardware, abnormality or malfunctioning of detection circuit or the like is considered. Therefore, replace servo module on the main CPU board for alarm 920 and 921; replace servo module on the option 2 board for alarm 922 and 923.

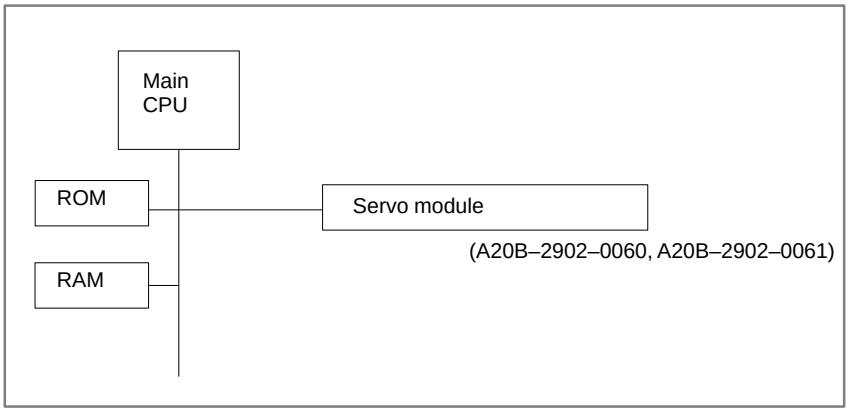

- **Main CPU board is faulty**

CPU or peripheral circuits may be faulty. Replace the main CPU board.

- **CNC control software ROM module is faulty**

Software may not work properly due to failure of FROM module. Change FROM module.

- **Power supply unit is faulty**

DC output voltage of power supply unit may be faulty. Replace the power supply unit.

<Location of module> Main CPU board

A16B–3200–0010

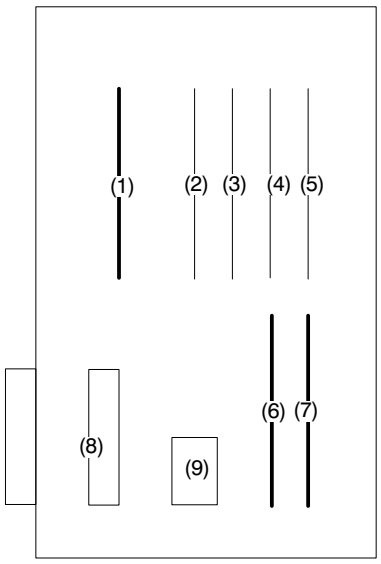

(1) FROM module
Specification : A20B–2902–0080～0082
A20B–2902–0090～0094
(7) Servo module of 1st, 2nd axis
Specification : A20B–2902–0060～0061
(6) Servo module of 3rd, 4th axis
Specification : A20B–2902–0060～0061

A16B–3200–0170

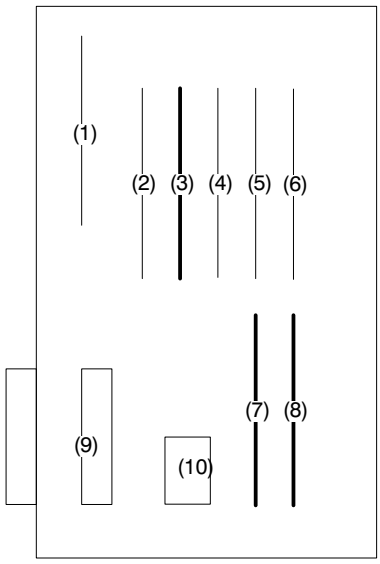

(3) FROM module
Specification : A20B–2902–0341,0343
A20B–2902–0410～0411
(7) Servo module of 1st, 2nd axis
Specification : A20B–2902–0060～0061
(6) Servo module of 3rd, 4th axis
Specification : A20B–2902–0060～0061

A16B–3200–0110

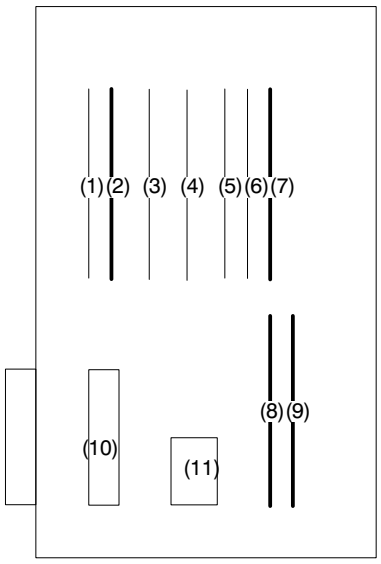

(2) FROM Module
Specification : A20B–2902–0341,0343
(7) Servo module of 1st, 2nd axis
Specification : A20B–2902–0060～0061
(9) Servo module of 3rd, 4th axis
Specification : A20B–2902–0060～0061
(8) Servo module of 5th, 6th axis
Specification : A20B–2902–0060～0061

A16B–2202–0860

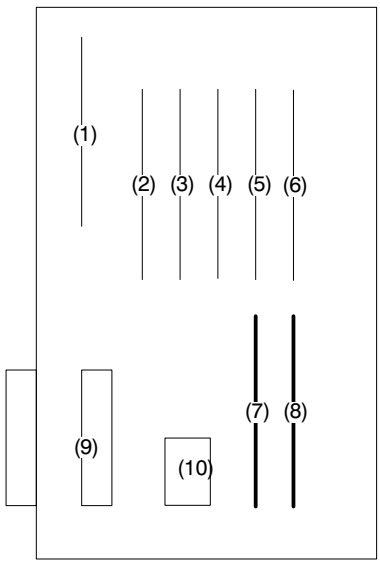

(3) FROM module
Specification : A20B–2902–0341,0343
A20B–2902–0410～0411
(8) Servo module of 1st, 2nd axis
Specification : A20B–2902–0060～0061
(7) Servo module of 3rd, 4th axis
Specification : A20B–2902–0060～0061

A16B–3200–0160

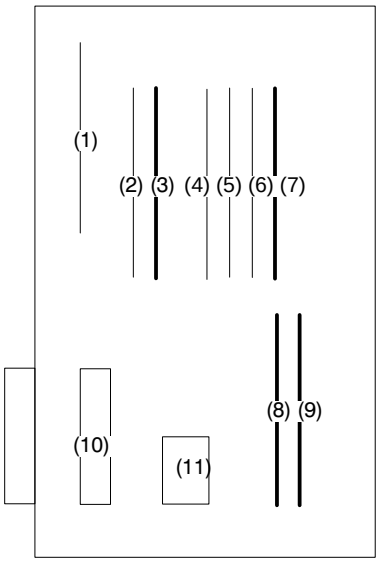

(3) FROM module
Specification : A20B–2902–0341, 0343
(7) Servo module of 1st, 2nd axis
Specification : A20B–2902–0060～0061
(9) Servo module of 3rd, 4th axis
Specification : A20B–2902–0060～0061
(8) Servo module of 5th, 6th axis
Specification : A20B–2902–0060～0061

<Location of module> Option 2 board

A16B–2202–0400,0401

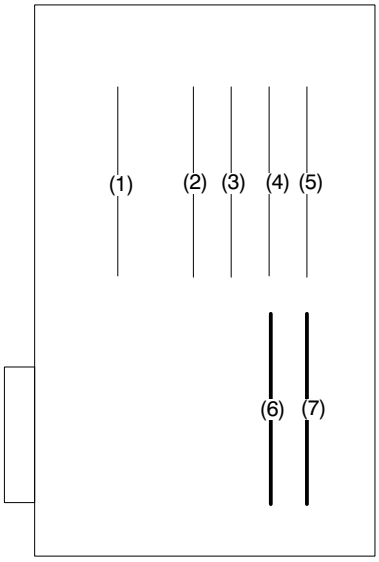

(7) Servo module of 5th, 6th axis
Specification : A20B–2902–0060～0061
(6) Servo module of 7th, 8th axis
Specification : A20B–2902–0060～0061

A16B–2202–0890,0891

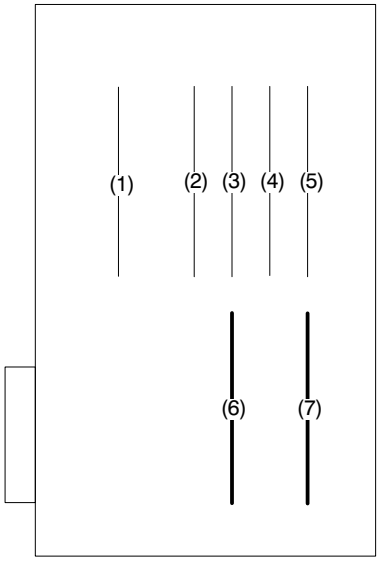

(7) Servo module of 5th, 6th axis
Specification : A20B–2902–0060～0061
(6) Servo module of 7th, 8th axis
Specification : A20B–2902–0060～0061

A16B–2202–0850,0851,0853

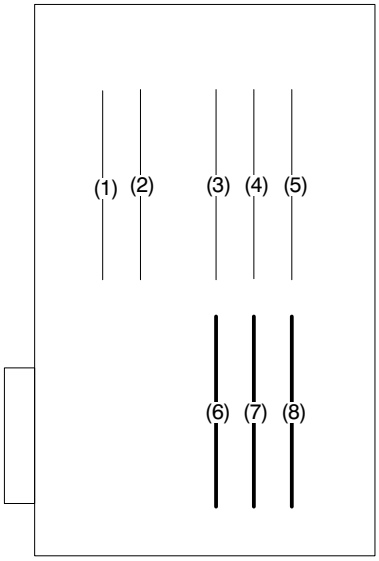

(6) Servo module of 5th, 6th axis
Specification : A20B–2902–0060～0061
(7) Servo module of 3rd, 4th axis
Specification : A20B–2902–0060～0061
(8) Servo module of 1st, 2nd axis
Specification : A20B–2902–0060～0061

8.34 ALARM 924 (SERVO MODULE MOUNTING ERROR)

The digital servo module is not mounted.

Note
This alarm may not occur during normal operaion.
This alarm may be generated when a PCB is changed for maintenance.

- **Causes and remedies**

Check installation of servo module on main CPU or option 2 board. For location of servo module, refer to an installation diagram of alarm 920 to 923.

<Series 16 Main CPU board>
1st to 4th axis servo module
(A20B–2902–0060 or A20B–2902–0061)

<Option 2 board>
5th to 8th axis servo module
(A20B–2902–0060 or A20B–2902 –0061)

Unless these boards are mounted correctly, if this alarm still generates, change main CPU board, option 2 board and/ or servo module.

- **Kinds of servo module**

A20B–2902–0060	Standard
A20B–2902–0061	For Learning control

8.35 ALARM 930 (CPU ERROR)

CPU error (illeagal interrupt) has generated.

Causes and Remedies

1) Main CPU board is faulty

An interrupt which will not occur during usual operation has generated.
Peripheral circuit of the CPU may be abnormal. Change the main CPU board. If operation is performed normally by power off and on, noise may be a cause. Refer to 8. Suppressing Noise.

8.36 ALARM 950 (PMC SYSTEM ALARM)

An error occurred when RAM test is being executed.

Causes and Remedies

The following causes are considered :

- **For PMC–RB**

Fault on Main CPU board

- PMC control module (3) is faulty.
- DRAM module (2) is faulty.
- FROM module (1) is faulty.

- **For PMC–RC**

Fault on Main CPU board

- PMC control module (5) is faulty.
- DRAM module (4) is faulty (Option 3 board)
- Option 3 board is faulty.

Module mounting position (Main CPU)

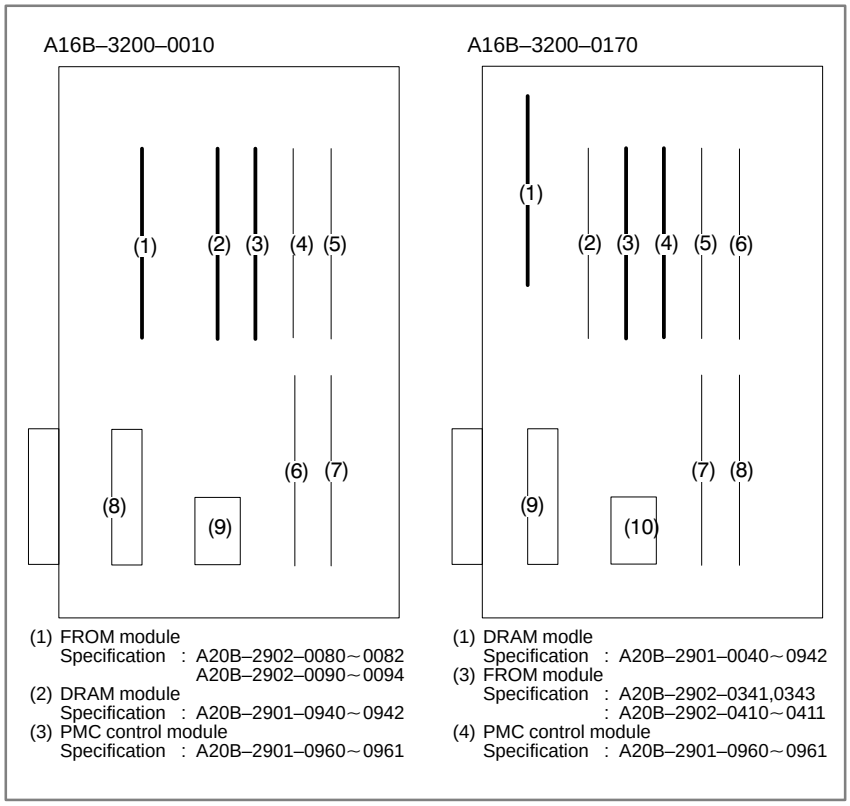

(1) FROM module
Specification : A20B–2902–0080～0082
A20B–2902–0090～0094
(2) DRAM module
Specification : A20B–2901–0940～0942
(3) PMC control module
Specification : A20B–2901–0960～0961

(1) DRAM modle
Specification : A20B–2901–0040～0942
(3) FROM module
Specification : A20B–2902–0341,0343
: A20B–2902–0410～0411
(4) PMC control module
Specification : A20B–2901–0960～0961

A16B–3200–0110

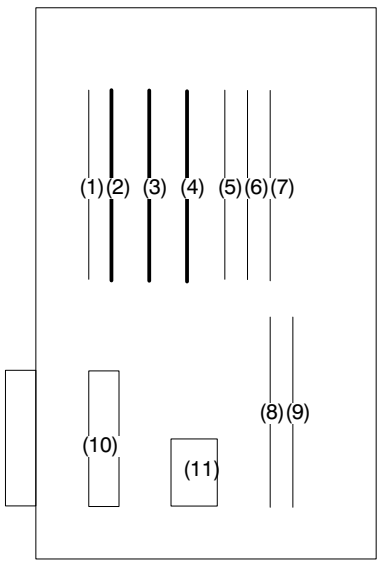

(2) FROM module
Specification : A20B–2902–0341,0343
(3) DRAM module
Specification : A20B–2901–0940～0942
(4) PMC control module
Specification : A20B–2901–0960～0961

A16B–2202–0860

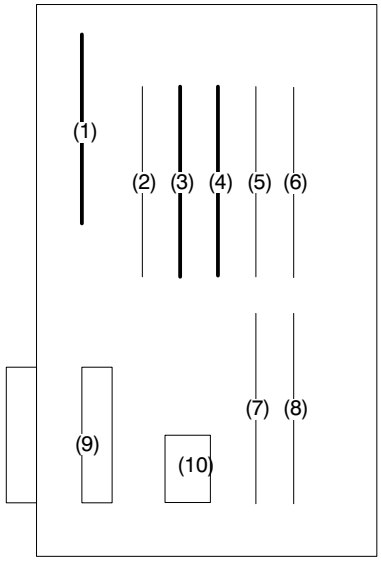

(1) DRAM module
Specification : A20B–2901–0940～0942
(3) FROM module
Specification : A20B–2902–0341,0343
: A20B–2902–0410～0411
(4) PMC control module
Specification: A20B–2901–0960～0961

A16B–3200–0160

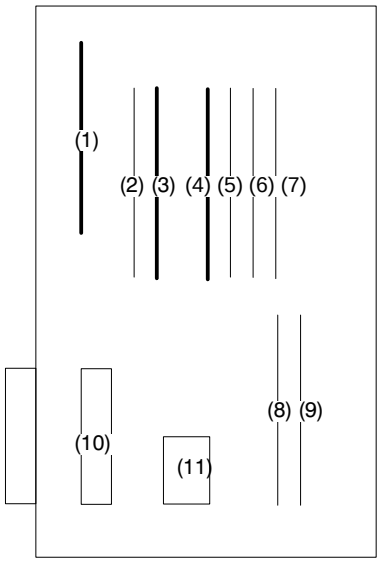

(1) DRAM module
Specification : A20B–2901–0940～0942
(3) FROM module
Specification : A20B–2902–0341,0343
A20B–2902–0410～0411
(4) PMC control module
Specification : A20B–2901–0960～0961

8.37 ALARM 951 (PMC–RC WATCH DOG ALARM)

A watch dog alarm has generated in PMC–RC.

Causes and Remedies

Option 3 board or a module on the option 3 board

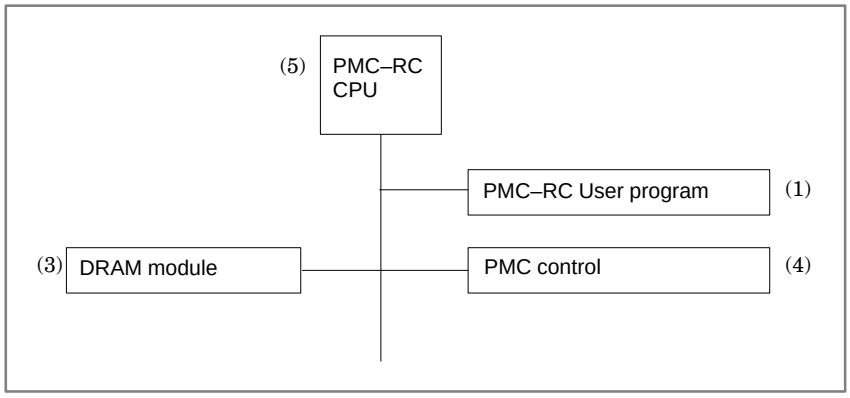

- Option 3 board is faulty.
- PMC DRAM module (4) is faulty.
- PMC control module (5) is faulty.

Module mounting position

(Option 3 board)

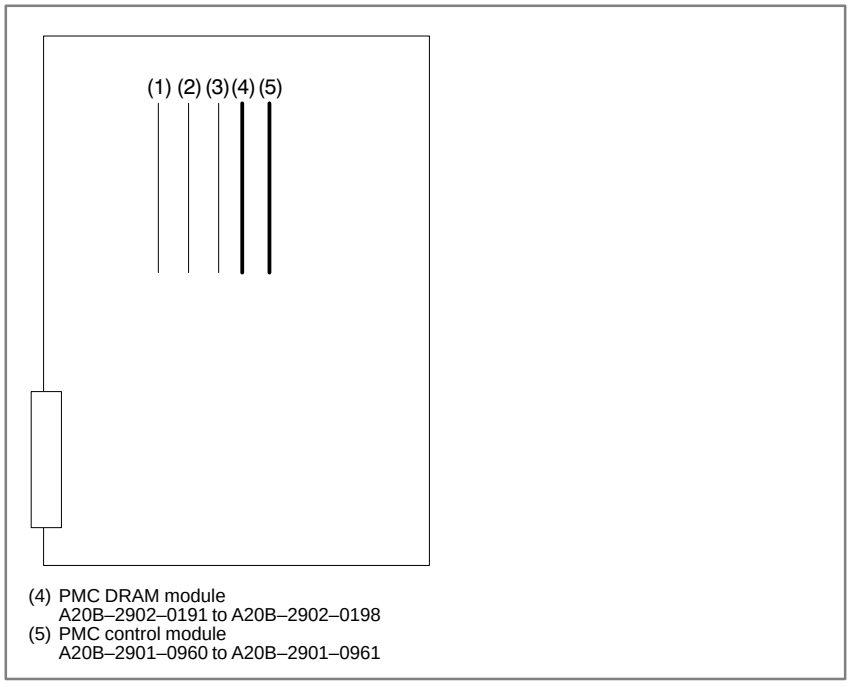

8.38 ALARM 970 (NMI ALARM IN PMC CONTROL MODULE)

RAM parity error or NMI has occurred in the PMC control module.

Causes and Remedies

Fault of PMC module is considered.

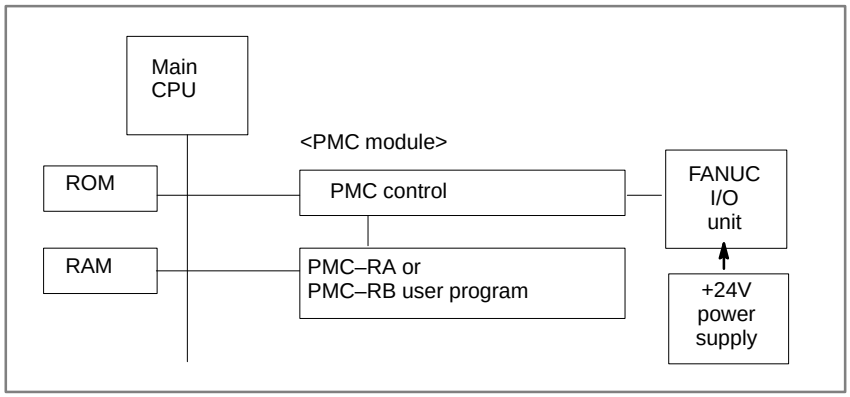

- PMC control module (3) is faulty.
- DRAM module (9) is faulty.

Module mounting position

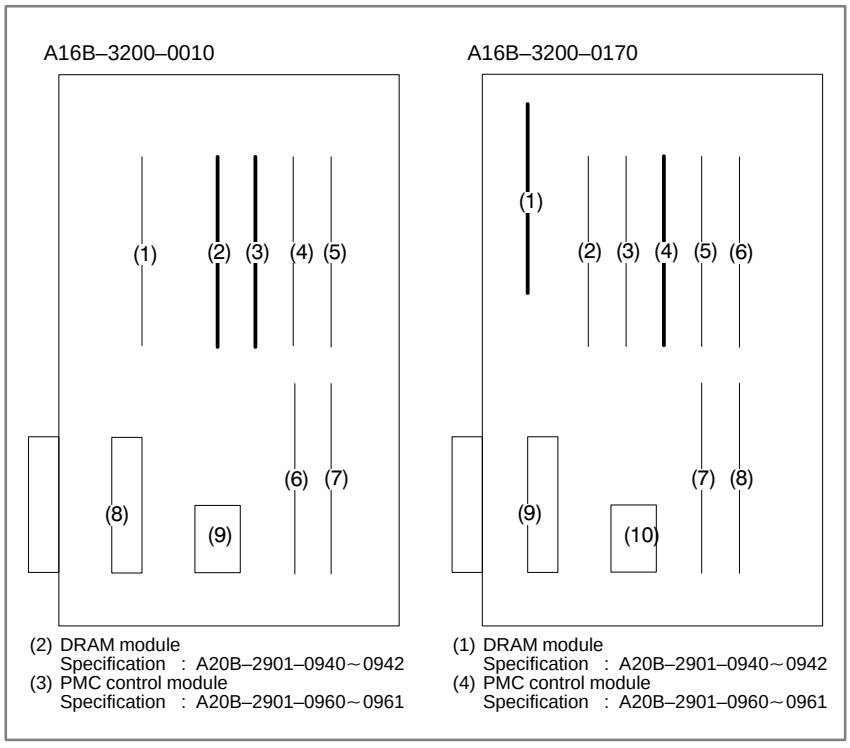

A16B–3200–0110

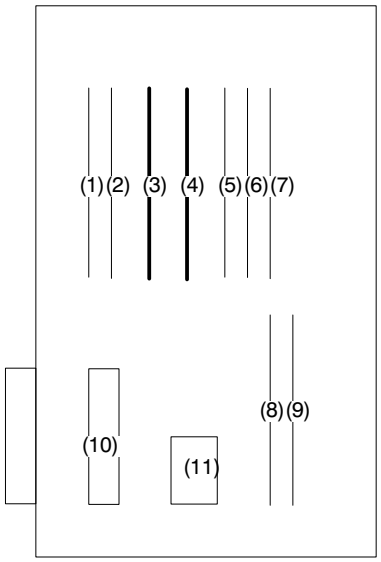

(3) DRAM module
Specification : A20B–2901–0940～0942
(4) PMC control module
Specification : A20B–2901–0960～0961

A16B–2202–0860

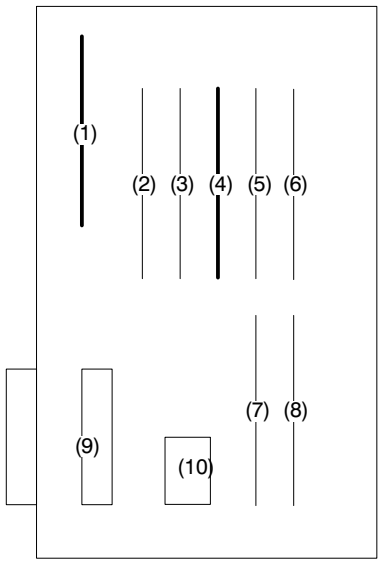

(1) DRAM modle
Specification : A20B–2901–0940～0942
(4) PMC control module
Specification : A20B–2901–0960～0961

A16B–3200–0160

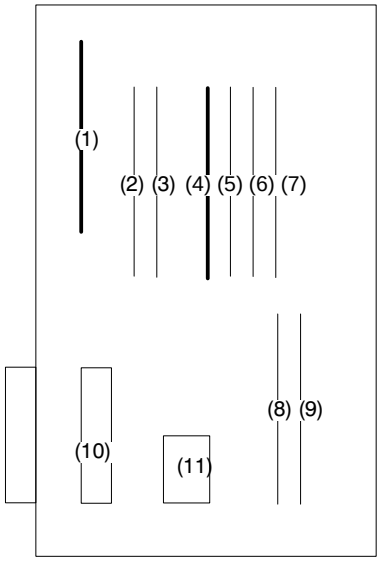

(1) DRAM module
Specification : A20B–2901–0940～0942
(4) PMC control module
Specification : A20B–2901–0960～0961

8.39 ALARM 971 (NMI ALARM IN SLC)

A communication error is detected between the CNC and FANUC I/O unit at SLC in the PMC control module.

Causes and Remedies

Fault of PMC module or fault of FANUC I/O unit

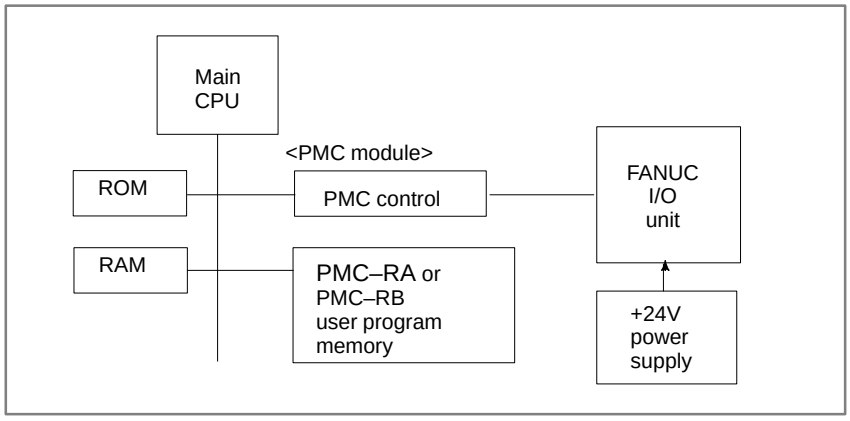

- PMC control module (3) is faulty.
- FANUC I/O unit is faulty.
- +24V power to the FANUC I/O unit is faulty.
- Remove connector CP32 of the interface module (AF01A,AF01B) and
- measure voltage across 1st and 2nd pins using tester.
- (Normally+24VDC±10%)

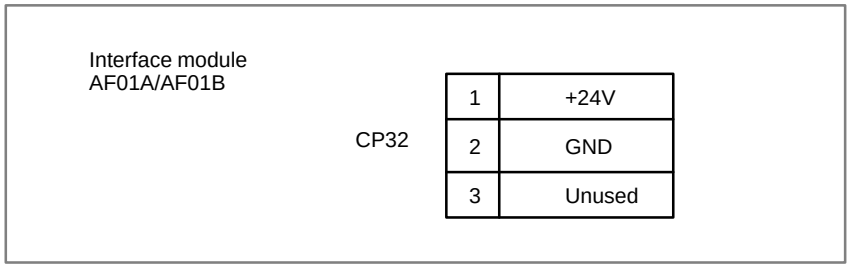

Disconnection or broken of cable.
Refer to previous page for the module mounting position.

8.40 ALARM 972 (NMI ALARM)

NMI has generated in a board other than the main CPU board.

Causes and Remedies

1) Any of option boards shown below may be faulty.
- Option 1 board
- Option 2 board
- Option 3 board
- Loader control board

Change above boards in the order, in which replacement is easier.

Note
When you change option 2 board, you must input data (parameters, programs, etc.) on sub side.
When you change loader control board, you must input data (parameters, programs, etc.) on loader side.

8.41 ALARM 973 (NMI ALARM BY UNKNOWN CAUSE)

An unknown NMI has generated.

Causes and Remedies

1) Main CPU board or power supply unit is faulty
   - Main CPU board is faulty.
   - Power supply unit is faulty.

Note
When the main CPU board is replaced, all the data in memory is lost. Set the NC data (parameter, offset and program etc) again.

2) Option boards may be faulty.
   - Option 1 board is faulty.
   - Option 2A
   - Option 3 board is faulty.
   - Loader control board is faulty

   Change above boards in the order, in which replacement is easier.

Note
When you change the option 2 board, you must input data (parameters, programs,etc.) on the sub side.
When you change loader control board, you must input data again (parameters, programs, etc.)

9 TROUBLESHOOTING (SERIAL INTERFACE SPINDLE)

This chapter describes a troubleshooting of the serial interface spindle amplifier.

9.1 LIST OF SERIAL INTERFACE SPINDLE AMPLIFIER ALARMS 401

9.2 TROUBLESHOOTING FOR EACH ALARM 404

9.1 LIST OF SERIAL INTERFACE SPINDLE AMPLIFIER ALARMS

For troubleshooting the listed alarms, refer to 9.2 “TROUBLE SHOOTING FOR EACH ALARM”.

Alarm No.	Meanings	Description	Remedy
AL–01	Motor overheat	Detects internal motor temperature : exceeding specified temperature.	Check load status. Cool motor, then reset alarm.
AL–02	Excessive speed deviation	Detects motor speed exceeding specified speed excessively.	Check load status. Reset alarm.
AL–03	DC link section fuse blown	Detects that fuse F4 in DC link section is blown (models 30S and 40S).	Check power transistors, and so forth. Replace fuse.
AL–04	Input fuse blown. Input power open phase.	Detects blown fuse (F1 to F3), open phase or momentary failure of power (models 30S and 40S).	Replace fuse. Check open phase and power supply regenerative circuit operation.
AL–05	Control power supply fuse blown	Detects that control power supply fuse AF2 or AF3 is blown (models 30S and 40S).	Check for control power supply short circuit. Replace fuse.
AL–07	Excessive speed	Detects that motor rotation has exceeded 115% of its rated speed.	Reset alarm.
AL–08	High input voltage	Detects that switch is set to 200 VAC when input voltage is 230 VAC or higher (models 30S and 40S).	Set switch to 230 VAC.
AL–09	Excessive load on main circuit section	Detects abnormal temperature rise of power transistor radiator.	Cool radiator, then reset alarm.
AL–10	Low input voltage	Detects drop in input power supply voltage.	Correct cause, then reset alarm.
AL–11	Overvoltage in DC link section	Detects abnormally high direct current power supply voltage in power circuit section.	Correct cause, then reset alarm.
AL–12	Overcurrent in DC link section	Detects flow of abnormally large current in direct current section of power circuit.	Correct cause, then reset alarm.
AL–13	CPU internal data memory abnormality	Detects abnormality in CPU internal data memory. This check is made only when power is turned on.	Correct cause, then reset alarm.
AL–15	Spindle switch/output switch alarm	Detects incorrect switch sequence in spindle switch/output switch operation.	Check sequence.
AL–16	RAM abnormality	Detects abnormality in RAM for external data. This check is made only when power is turned on.	Correct cause, then reset alarm.
AL–18	Program ROM sum check error	Detects program ROM data error. This check is made only when power is turned on.	Correct cause, then reset alarm.
AL–19	Excessive U phase current detection circuit offset	Detects excessive U phase current detection circuit offset. This check is made only when power is turned on.	Correct cause, then reset alarm.
AL–20	Excessive V phase current detection circuit offset	Detects excessive V phase current detection circuit offset. This check is made only when power is turned on.	Correct cause, then reset alarm.
AL–24	Serial transfer data error	Detects serial transfer data error (such as NC power supply turned off, etc.)	Correct cause, then reset alarm.
AL–25	Serial data transfer stopped	Detects that serial data transfer has stopped.	Correct cause, then reset alarm.
AL–26	Disconnection of speed detection signal for Cs contouring control	Detects abnormality in speed detection signal for Cs contouring control (such as unconnected cable and adjustment error).	Correct cause, then reset alarm.

Alarm No.	Meanings	Description	Remedy
AL–27	Position coder signal disconnection	Detects abnormality in position coder signal (such as unconnected cable and parameter setting error).	Correct cause, then reset alarm.
AL–28	Disconnection of position detection signal for Cs contouring control	Detects abnormality in position detection signal for Cs contouring control (such as unconnected cable and adjustment error).	Correct cause, then reset alarm.
AL–29	Short-time overload	Detects that overload has been continuously applied for some period of time (such as restraining motor shaft in positioning).	Correct cause, then reset alarm.
AL–30	Input circuit overcurrent	Detects overcurrent flowing in input circuit.	Correct cause, then reset alarm.
AL–31	Speed detection signal disconnection motor restraint alarm	Detects that motor cannot rotate at specified speed (but rotates at very slow speed or has stopped). (This includes checking of speed detection signal cable.)	Correct cause, then reset alarm.
AL–32	Abnormality in RAM internal to LSI for serial data transfer	Detects abnormality in RAM internal to LSI for serial data transfer. This check is made only when power is turned on.	Correct cause, then reset alarm.
AL–33	Insufficient DC link section charging	Detects insufficient charging of direct current power supply voltage in power circuit section when magnetic contactor in amplifier is turned on (such as open phase and defective charging resistor).	Correct cause, then reset alarm.
AL–34	Parameter data setting beyond allowable range of values	Detects parameter data set beyond allowable range of values.	Set correct data.
AL–35	Excessive gear ratio data setting	Detects gear ratio data set beyond allowable range of values.	Set correct data.
AL–36	Error counter over flow	Detects error counter overflow.	Correct cause, then reset alarm.
AL–37	Speed detector parameter setting error	Detects incorrect setting of parameter for number of speed detection pulses.	Set correct data.
AL–39	Alarm for indicating failure in detecting 1-rotation signal for Cs contouring control	Detects 1-rotation signal detection failure in Cs contouring control.	Make signal adjustment. Check cable shield status.
AL–40	Alarm for indicating 1-rotation signal for Cs contouring control not detected	Detects that 1-rotation signal has not occurred in Cs contouring control.	Make 1-rotation signal adjustment.
AL–41	Alarm for indicating failure in detecting position coder 1-rotation signal.	Detects failure in detecting position coder 1-rotation signal.	Make signal adjustment for signal conversion circuit. Check cable shield status.
AL–42	Alarm for indicating position coder 1-rotation signal not detected	Detects that position coder 1-rotation signal has not occurred.	Make 1-rotation signal adjustment for signal conversion circuit.
AL–43	Alarm for indicating disconnection of position coder signal for differential speed mode	Detects that main spindle position coder signal used for differential speed mode is not connected yet (or is disconnected).	Check that main spindle position coder signal is connected to connector CN12.
AL–46	Alarm for indicating failure in detecting position coder 1-rotation signal in thread cutting operation.	Detects failure in detecting position coder 1-rotation signal in thread cutting operation.	Make 1-rotation signal adjustment for signal conversion circuit. Check cable shield status.
AL–47	Position coder signal abnormality	Detects incorrect position coder signal count operation.	Make signal adjustment for signal conversion circuit. Check cable shield status.
AL–48	Position coder 1-rotation signal abnormality	Detects that occurrence of position coder 1-rotation signal has stopped.	Make 1-rotation signal adjustment for signal conversion circuit.

Alarm No.	Meanings	Description	Remedy
AL–49	The converted differential speed is too high.	Detects that difference between a spindle speed and another spindle speed has exceeded allowable limit in differential speed mode.	Calculate differential speed by multiplying speed of other spindle by gear ratio. Check if calculated value is not greater than maximum speed of motor.
AL–50	Excessive speed command calculation value in spindle synchronization control	Detects that speed command calculation value exceeded allowable range in spindle synchronization control.	Calculate motor speed by multiplying specified spindle speed by gear ratio. Check if calculated value is not greater than maximum speed of motor.
AL–51	Undervoltage at DC link section	Detects that DC power supply voltage of power circuit has dropped (due to momentary power failure or loose contact of magnetic contactor).	Correct cause, then reset alarm.
AL–52	ITP signal abnormality I	Detects abnormality in synchronization signal (ITP signal) with CNC (such as loss of ITP signal).	Correct cause, then reset alarm.
AL–53	ITP signal abnormality II	Detects abnormality in synchronization signal (ITP signal) with CNC (such as loss of ITP signal).	Correct cause, then reset alarm.
AL–54	Overload current alarm	Detects that excessive current flowed in motor for long time.	Check if overload operation or frequent acceleration/deceleration is performed.
AL–55	Power line abnormality in spindle switching/output switching	Detects that switch request signal does not match power line status check signal.	Check operation of magnetic contractor for power line switching. Check if power line status check signal is processed normally.

9.2 TROUBLESHOOTING FOR EACH ALARM

AL–01 Motor overheat

Item	Cause of trouble	Check procedure	Remedy
1	Defective fan motor of motor	Check if fan motor is rotating.	Replace fan motor.
2	Overload operation	Check cutting conditions and how tools are worn. Check load meter for cutting.	Review cutting conditions and tools.
3	Dirty motor cooling system	Check motor cooling system for dirt.	Clean motor cooling system with an air gun or vacuum cleaner.
4	Disconnection or loose contact of motor overheat signal line	Check signal line connection status.	Connect signal line correctly.

AL–02 Excessive speed deviation

Item	Cause of trouble	Check procedure	Remedy
1	Overload operation (overload)	Check with load meter.	Review cutting conditions and tools.
2	Defective transistor module	Check if transistor collector-emitter is open.	Replace transistor module.
3	Fuse for protecting driver on PCB blown or not inserted correctly (disconnection, loose contact, etc.)	Check if fuses F3A to F3M (models 1S to 26S) or FA to FG (models 30S and 40S) are blown or removed.	Insert fuses firmly. Replace any blown fuse.
4	Speed feedback signal abnormality	Check level of speed feedback signal.	Check motor speed detector and signal cable connection.
5	Wiring failure (disconnection, loose contact, etc.)	Check that cables are connected correctly.	

Note

How to check the speed feedback signal

Observe the speed feedback signal with an osciloscope after turning on power and setting the rotation command off (motor stopped and drive power set off).

Observe the test points indicated below, while turning the motor slowly by hand.

Test point	Normal wave form
PA–0V	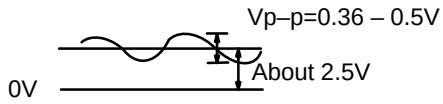
PB–0V	Same as above
RA–0V	DC2.5V±0.2V
RB–0V	Same as above
PAA–0V PBA–0V (CW rotation)	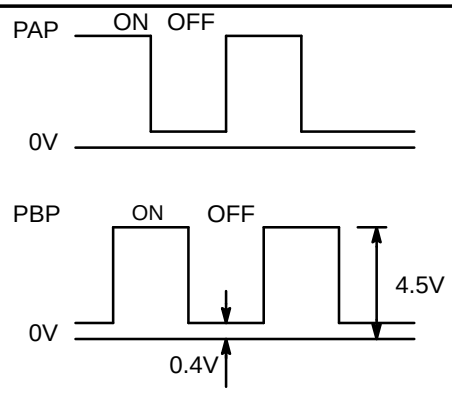 Check that the ON/OFF duty cycle is 50%. (The PAP and PBP signals are inverted in CCW direction.)

AL–03 Blown fuse in DC link section

This alarm indicates that the fuse (F4) in the DC link section is blown. In this case, the transistor module may have failed.

AL–04 Input fuse blown Input power open phase

Item	Cause of trouble	Check procedure	Remedy
1	High impedance on AC power supply side. Example: Two transformers are connected in series, or variable autotransformer is connected.	Alarm No. 04 is on only at time of deceleration from high speed operation. Alarm No. 04 can be on when F1 to F3 are not blown.	Change power supply to one with low impedance. There may be loose connection of input power cable Example: Open phase due to screws not tightened firmly
2	Defective transistor module		Replace transistor module and fuse.
3	Defective diode module or thyristor module	Disconnect diode modules DM1 to DM3 and thyristor modules SM1 to SM3, then check A-K connection with multimeter. (Defective modules are usually short-circuited.)	Replace defective part. Replace blown fuse.
4	Defective surge absorber or capacitor	Check surge absorbers Z1 to Z3 and capacitors C4 to C6.	Replace defective part. Replace blown fuse.
5	When input fuse is not blown	Check if Item 1 is applicable.	When Item 1 is not applicable, replace PCB.

AL–05 Control power supply fuse blown

Item	Cause of trouble	Check procedure	Remedy
1	Defective PCB	Check AC input voltage. See (5) above.	Replace PCB.
2	Abnormal power supply voltage		

AL–07 Excessive speed (Detection by digital value)

Item	Cause of trouble	Check procedure	Remedy
1	Incorrect setting of parameter for number of speed feedback pulses (No. 6511)	Check if number of speed feedback pulses matches parameter setting.	Set correct value in parameter.

Note
See Chapter 6.

AL–08 High input voltage

Item	Cause of trouble	Check procedure	Remedy
1	AC power supply voltage 10% higher than rated voltage.	Check power supply voltage.	
2	Incorrect setting of toggle switch for voltage switching.	Check power supply voltage.	Change setting from 200V to 230V.

AL–09 Heat sink is overheated

Item	Cause of trouble	Check procedure	Remedy
1	Cooling fan is defective.	Check if fan is rotating.	Replace fan.
2	Overload operation.	Check load by using a load meter.	Re-examine the cutting condition.
3	Dusty and dirty.		Clean using compressed air or vacuum cleaner.

AL–10 Input power voltage drops

This alarm indicates abnormally low AC power voltage (–15% or less). This alarm may be generated even during momentary power failures.

AL–11 Overvoltage of DC link circuit (Regenerative circuit is faulty…Regeneration failure)

Item	Cause of trouble	Check procedure	Remedy
1	High power impedance.		Examine AC power specification.
2	PCB is defective.		Replace PCB.
3	Defective transistor module (TM1).		Replace transistor module.

AL–12 Overcurrent flows to DC link circuit

Item	Cause of trouble	Check procedure	Remedy
1	Output terminals or internal circuit of motor is shorted.	Check connections.	
2	Transistor module is defective.	Check the transistor module.	Replace transistor module.
3	PCB is defective.		Replace PCB.

AL–13 **CPU internal data memory alarm**

Replace PCB .

AL–16 **RAM abnormality**

Item	Cause of trouble	Check procedure	Remedy
1	External data memory (RAM) defective		Replace memory (RAM).
2	PCB defective		Replace PCB.

AL–18 **Program ROM sum check error**

Item	Cause of trouble	Check procedure	Remedy
1	Program memory data (ROM) defective	Compare data displayed when power is turned ON with ROM labels.	Replace program memory (ROM).

AL–19 **Excessive U phase current detection circuit offset**

Item	Cause of trouble	Check procedure	Remedy
1	A/D converter defective		Replace A/D converter.
2	U-phase current detector circuit defective	After power is turned on, check if offset voltage on check terminal IU is beyond range of about ±100 mV.	Replace PCB.
3	Loose contact of connectors between PCB and power circuit	Check connector connection between PCB and power circuit.	Ensure that PCB and power circuit are securely connected with each other.

AL–20 **Excessive V phase current detection circuit offset**

Item	Cause of trouble	Check procedure	Remedy
1	V-phase current detector circuit defective	After power is turned on, check if offset voltage on check terminal IV is beyond range of about ±100 mV.	Replace PCB.
2	Loose contact of connectors between PCB and power circuit	Check connector connection between PCB and power circuit.	Ensure that PCB and power circuit are securely connected with each other.

AL–24 **Serial transfer data error**

AL–25 **Serial data transfer stopped**

Item	Cause of trouble	Check procedure	Remedy
1	CNC power supply is OFF	Check that CNC power is ON.	Turn CNC power ON.
2	Defective optical cable for serial data transmission	Check that optical cable is fitted securely to the connector. Check that the cable is not broken. Check that transmission/ reception surfaces of the cable are clean.	Connect securely. Replace optical cable. Clean optical cable transmission/reception surfaces.
3	Defective data transmission/reception elements in LSI used in serial data transmission		Replace LSI. Replace PCB.

AL–26 Disconnection of speed detection signal for Cs contouring control

Item	Cause of trouble	Check procedure	Remedy
1	Signal level of spindle motor for Cs contouring control is invalid.	Check the signal, and if necessary adjust to the normal level using the variable resistor for signal level adjustment in the preamp.	
2	Signal line of spindle motor for Cs contour control is defective	Check that signal cable is connected securely to connector. Check that signal cable is not broken.	Connect signal cable securely. Replace signal cable.
3	Defective detector circuit for Cs contour control		Replace detector circuit.
4	Incorrect parameter setting	Check that the parameter setting does not indicate that the Cs contour control detector is used when actually it is not.	Parameter CAXIS1 = 0 No. 4001#5

AL–27 Position coder signal disconnection

Item	Cause of trouble	Check procedure	Remedy
1	Position coder signal line defective	Check that signal cable is connected securely to connector. Check that signal cable is not broken.	Connect signal cable securely. Replace signal cable.
2	Incorrect parameter setting	Check that the parameter setting does not indicate that the position coder signal is used when actually it is not.	Parameter MRDY2 = 0 No. 4001#2

AL–28 Disconnection of position detection signal for Cs contouring control

Item	Cause of trouble	Check procedure	Remedy
1	Signal level of spindle detector for Cs axis control is defective	Check the signal level, and if necessary adjust to the normal level using the variable resistor for signal level adjustment in the preamp.	
2	Signal line of spindle detector for Cs axis control is defective	Check that signal cable is connected securely to connector. Check that signal cable is not broken.	Connect signal cable securely. Replace signal cable.
3	Defective detector circuit for Cs axis control		Replace detector circuit.

AL–29 Short–time overload

Item	Cause of trouble	Check procedure	Remedy
1	Overloaded operation (Overload)	Use loadmeter to check that a load close to the load resistance limit is not imposed continuously for 30 seconds or more.	Re-examine cutting conditions and tools.

AL–30 Input circuit overcurrent

Item	Cause of trouble	Check procedure	Remedy
1	Defective of power transistor used for power	Check power transistor.	Replace power transistor.
2	Defective of power regeneration circuit		Replace PCB.

AL–31 Speed detection signal disconnection motor restraint alarm

Item	Cause of trouble	Check procedure	Remedy
1	Motor constrained	Check that nothing is preventing the motor from accelerating.	Remove cause.
2	Defective motor speed feedback signal	Check signal waveform. (Alarm No. 2)	Remove cause.
3	Defective motor speed feedback signal cable	Check that cable is connected securely to connector. Check that cable is not broken.	Connect cable securely. Replace cable.

AL–32 Abnormality in RAM internal to LSI for serial data transfer

Item	Cause of trouble	Check procedure	Remedy
1	Defective LSI used in serial data transmission		Replace LSI. Replace PCB.

AL–33 Insufficient DC link section charging

Item	Cause of trouble	Check procedure	Remedy
1	Defective relay used in DC link recharging.Disconnection of resistor used in limiting re-charge current	Check relevant parts.	Replace amp.

AL–34 Parameter data setting beyond allowable range of values

Item	Cause of trouble	Check procedure	Remedy
1	Incorrect parameter setting	Check if specified parameter value is beyond allowable range of values.	Specify value within allowable range.

AL–34 and F–XXX are alternately displayed in the spindle amplifier indicator section if an AL–34 alarm is raised.
”XXX” indicates the data number internal to the spindle for a parameter where a value beyond the allowable range is specified.

AL–35 Excessive gear ratio data setting

Item	Cause of trouble	Check procedure	Remedy
1	Parameter data of gear ratio and position gain are too large.	Check gear ratio and position gain data.	Change to suitable values.

AL–37 Speed detector parameter setting error

Item	Cause of trouble	Check procedure	Remedy
1	Incorrect setting of parameter for number of speed feedback pulses (No. 6511)	Check if number of speed feedback pulses matches parameter setting.	Set correct value in parameter.

AL–39 Alarm for indicating failure in detecting 1–rotation signal for Cs contouring control

Item	Cause of trouble	Check procedure	Remedy
1	Incorrect data ROM type for Cs contouring control detector circuit, or incorrect setting	Check data ROM type for Cs contouring control detector circuit and setting.	Install correct type of ROM. Perform setting correctly.
2	Low level of Cs contouring control feedback signal, or noise on same feedback signal	Check feedback signal level and also check if feedback signal waveform includes noise.	Adjust feedback signal. Check shielding status.

AL–40 Alarm for indicating 1–rotation signal for Cs contouring control not detected

Item	Cause of trouble	Check procedure	Remedy
1	No occurrence of 1-rotation signal among Cs contouring control feedback signals, or 1-rotation signal offset adjustment error	Check 1-rotation signal among Cs contouring control feedback signals.	Make 1-rotation signal offset adjustment. Check cables.

AL–41 Alarm for indicating failure in detecting position coder 1–rotation signal

Item	Cause of trouble	Check procedure	Remedy
1	Incorrect setting of parameter for number of position coder signal pulses (No. 4003#4,6,7).	Check number of position coder signal pulses and parameter setting.	Set correct value in parameter.
2	Incorrect amplitude and offset of position coder feedback signal, or noise on same feedback signal.	Check feedback signal level and also check if feedback signal waveform includes noise.	Adjust feedback signal. Check shielding status.

AL–47 Position coder signal abnormality

Item	Cause of trouble	Check procedure	Remedy
1	Incorrect setting of parameter for number of position coder signal pulses (No. 4003#4,6,7).	Check number of position coder signal pulses and parameter setting.	Set correct value in parameter.
2	Incorrect amplitude and offset of position coder feedback signal, or noise on same feedback signal.	Check feedback signal level and also check if feedback signal waveform includes noise.	Adjust feedback signal. Check shielding status.

10 TROUBLESHOOTING (ANALOG INTERFACE SPINDLE)

This chapter describes troubleshooting of the analog interface spindle.

10.1 AL–01 (MOTOR OVERHEAT) 412
10.2 AL–02
(EXCESSIVE DEVIATION OF SPEED) 413
10.3 AL–06,07 (OVER SPEED) 414
10.4 AL–09
(UNIT OVERHEAT / 6S TO 26S ONLY) 415
10.5 AL–10 (LOW INPUT VOLTAGE) 416
10.6 AL–11 (DC LINK EXCESSIVE VOLTAGE) 417
10.7 AL–12 (DC LINK EXCESSIVE CURRENT) 418
10.8 ABNORMAL SOUND AND VIBRATION
DURING ROTATION 419
10.9 NO ROTATION OR INCORRECT SPEED 420
10.10 CONFIRMATION OF TRANSISTOR
MODULE 421

10.1
AL–01
(MOTOR OVERHEAT)

Model 6S to 22S (A20B–1003–0010)

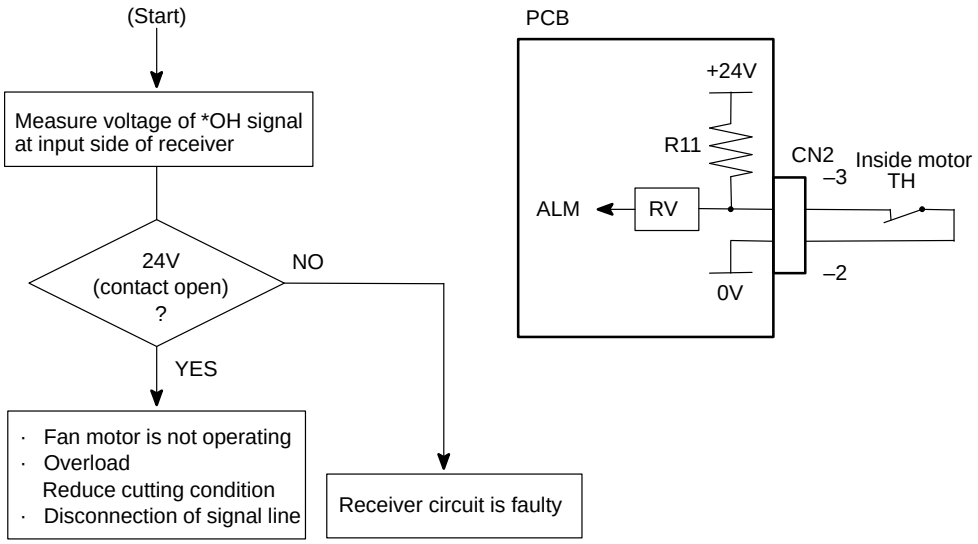

Model 1S to 3S (A16B–1100–0200)

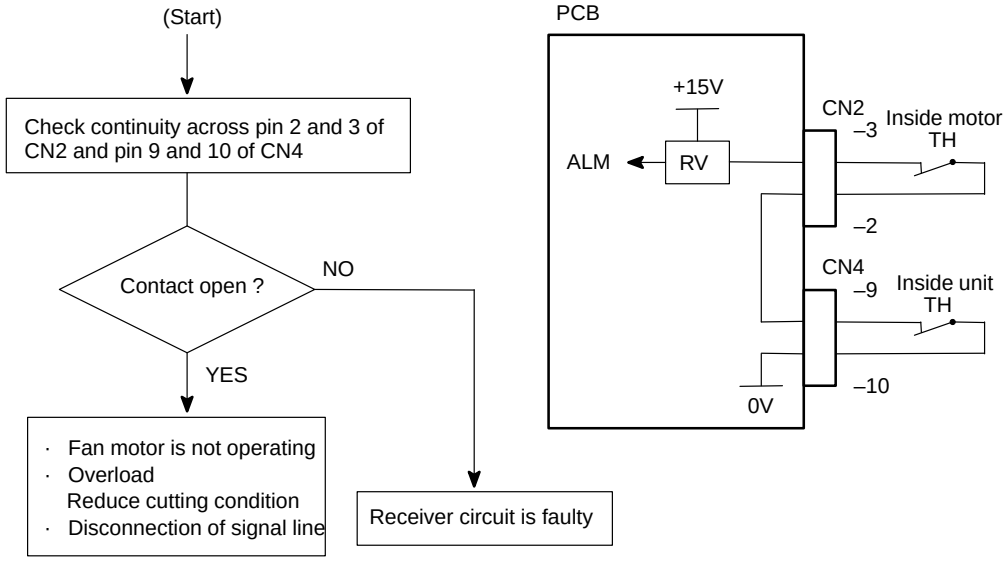

10.2 AL–02 (EXCESSIVE DEVIATION OF SPEED)

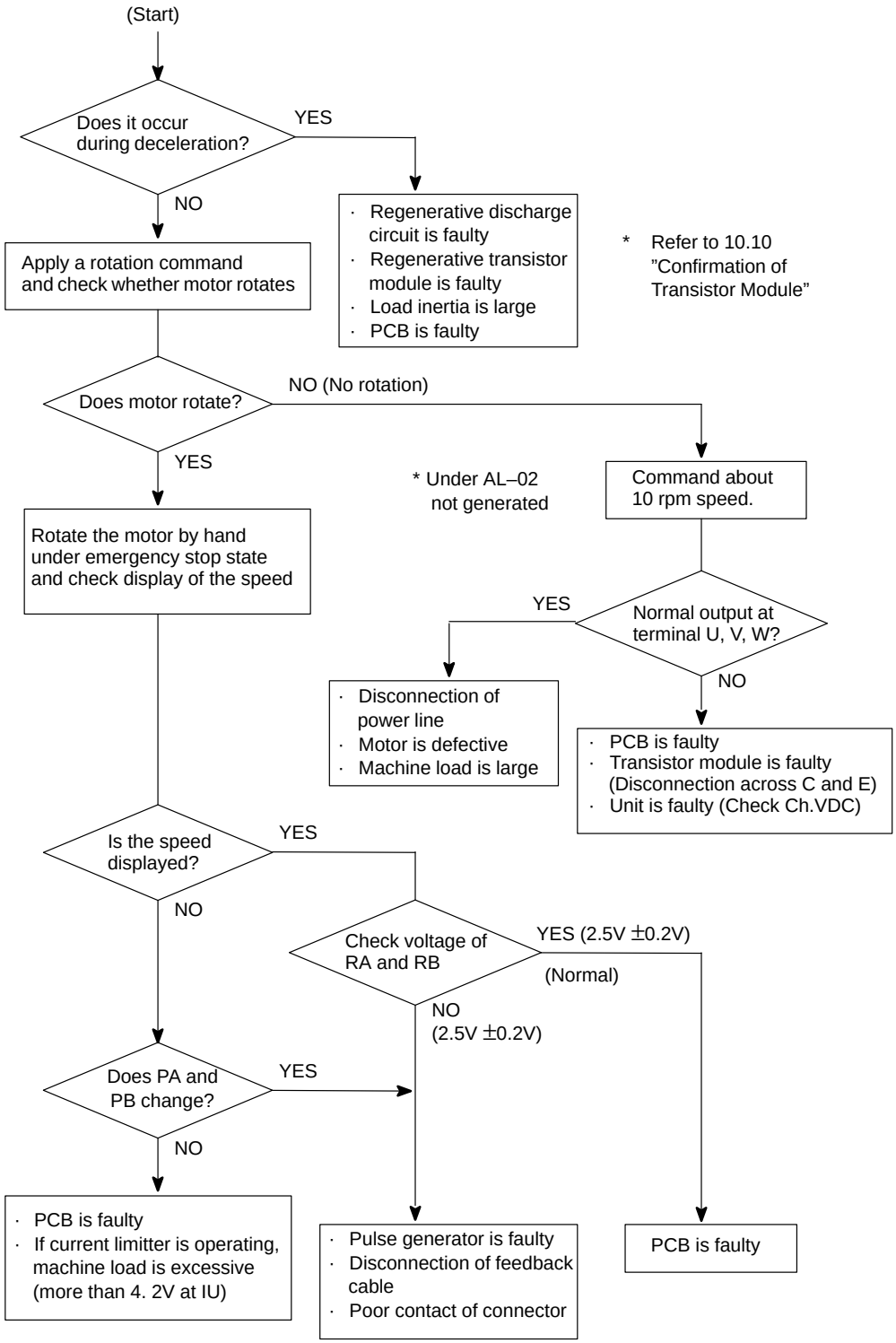

10.3
AL–06, 07
(OVER SPEED)

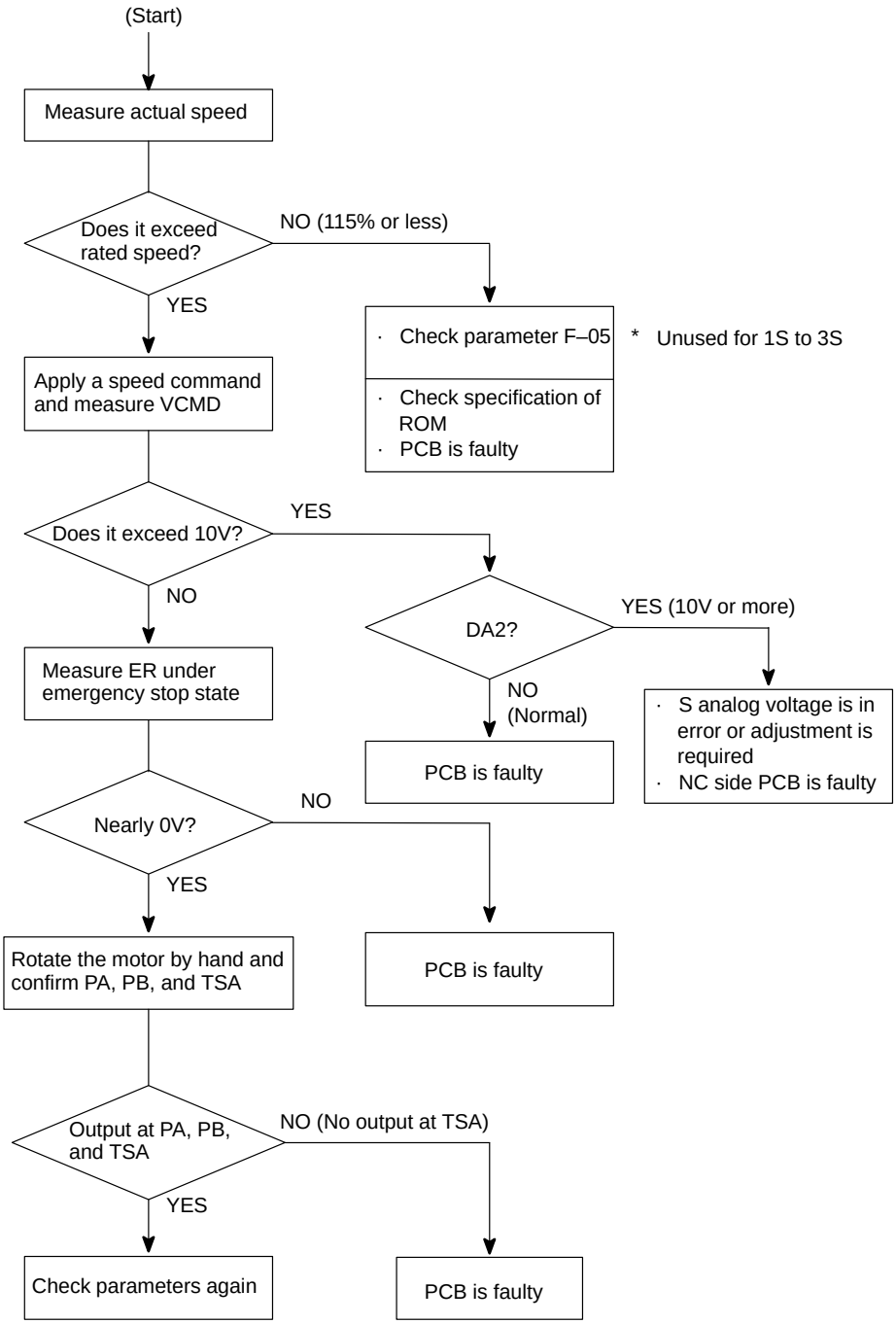

10.4 AL–09 (UNIT OVERHEAT / 6S TO 26S ONLY)

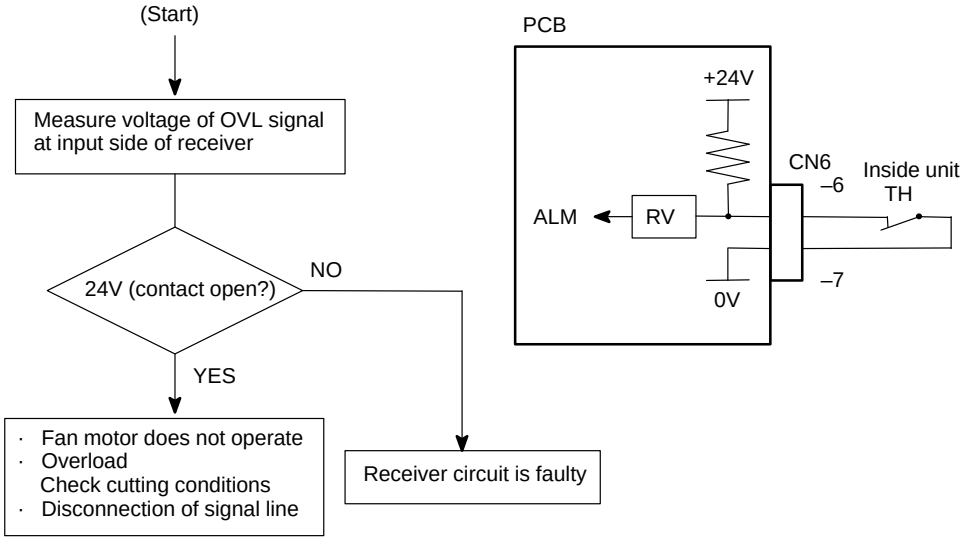

10.5 AL–10 (LOW INPUT VOLTAGE)

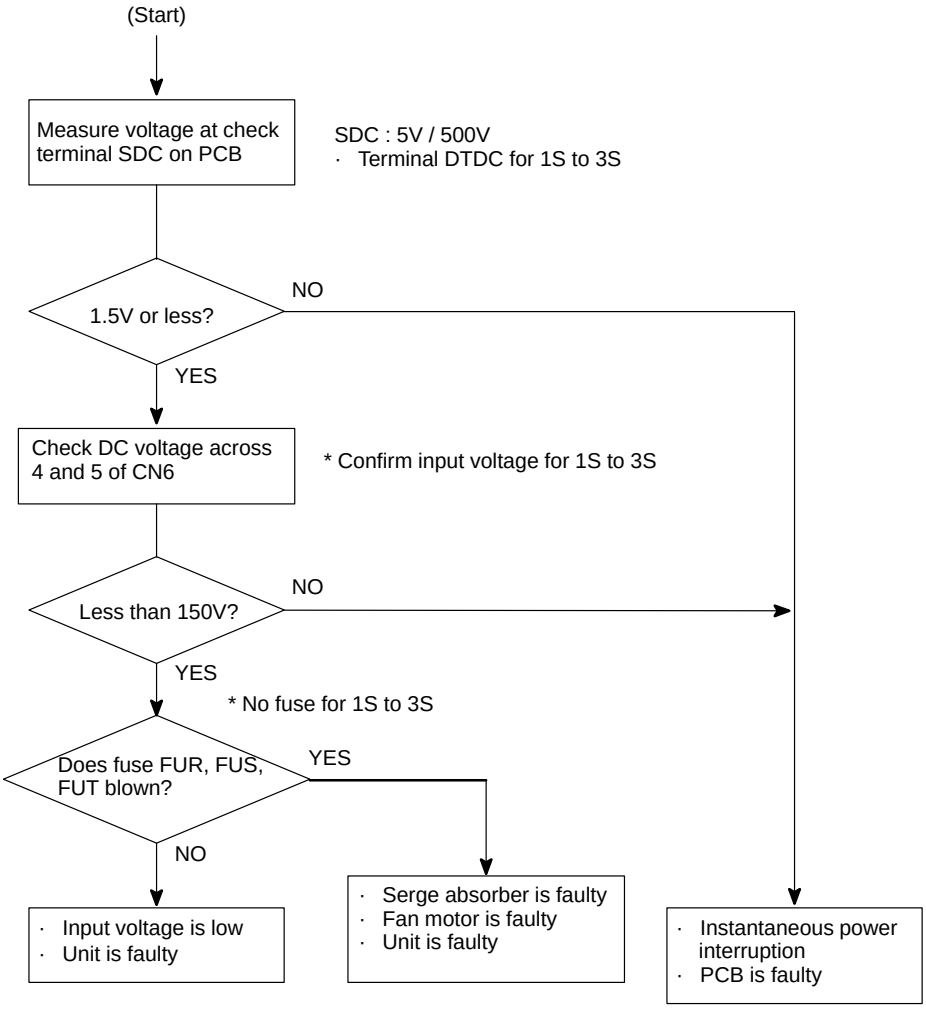

10.6 AL–11 (DC LINK EXCESSIVE VOLTAGE)

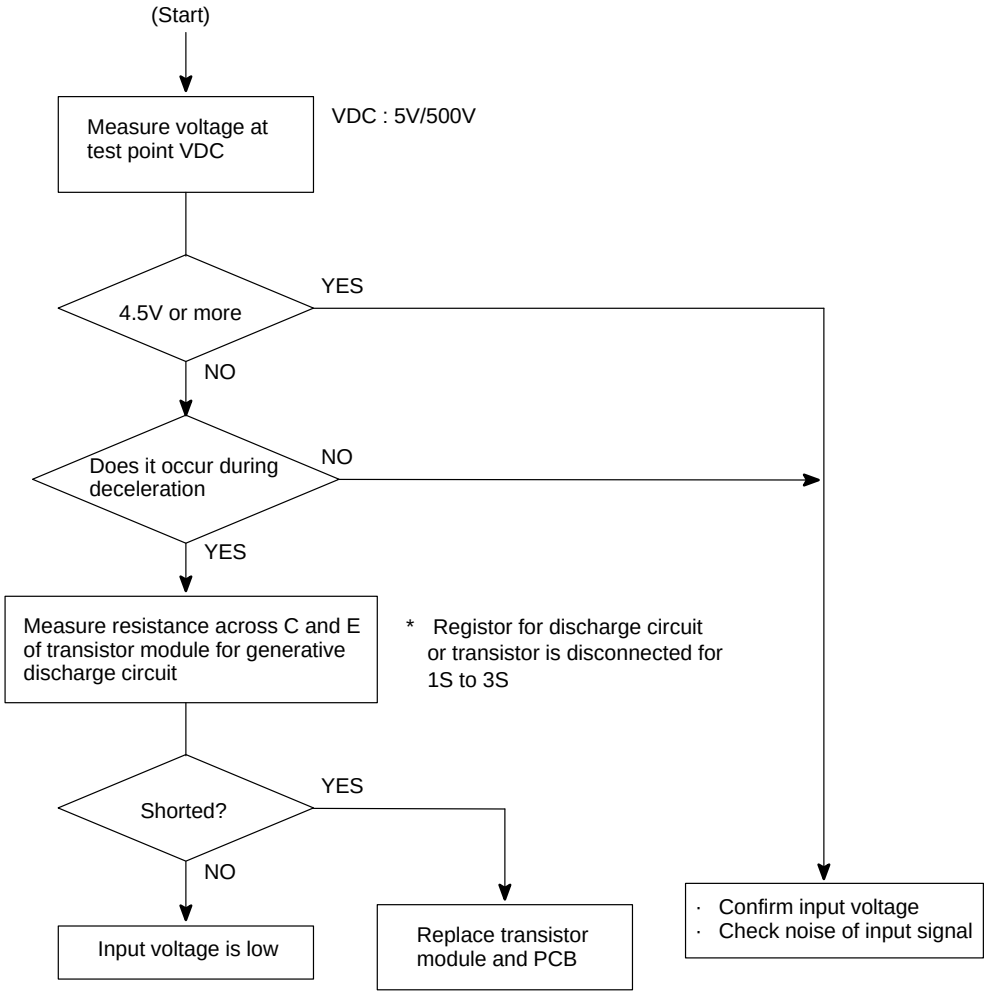

10.7 AL–12 (DC LINK EXCESSIVE CURRENT)

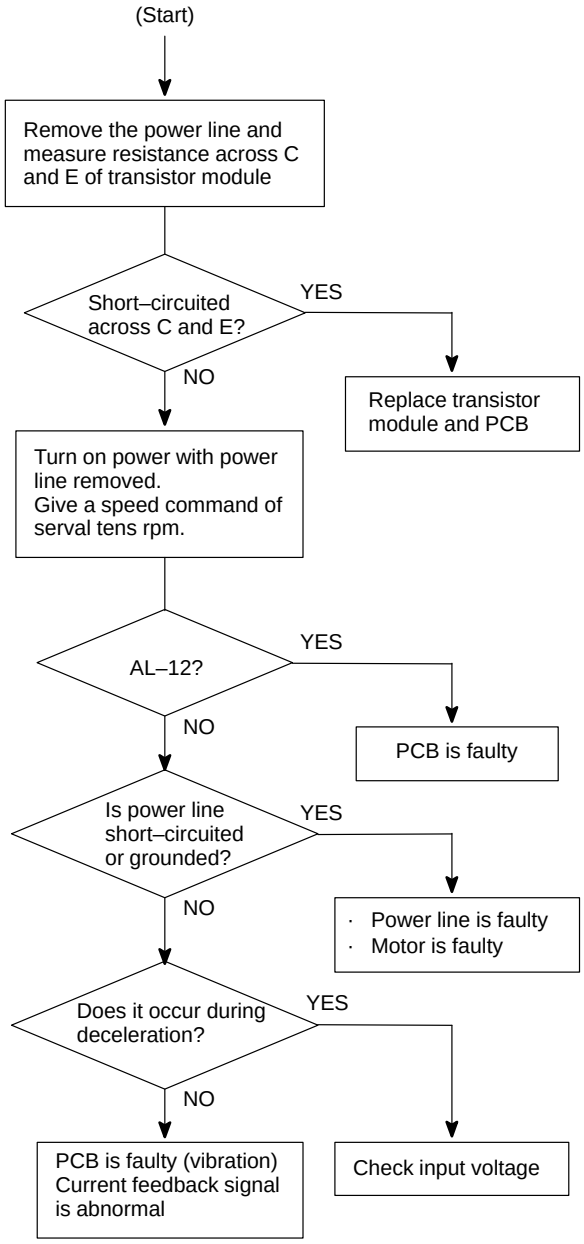

10.8 ABNORMAL SOUND AND VIBRATION DURING ROTATION

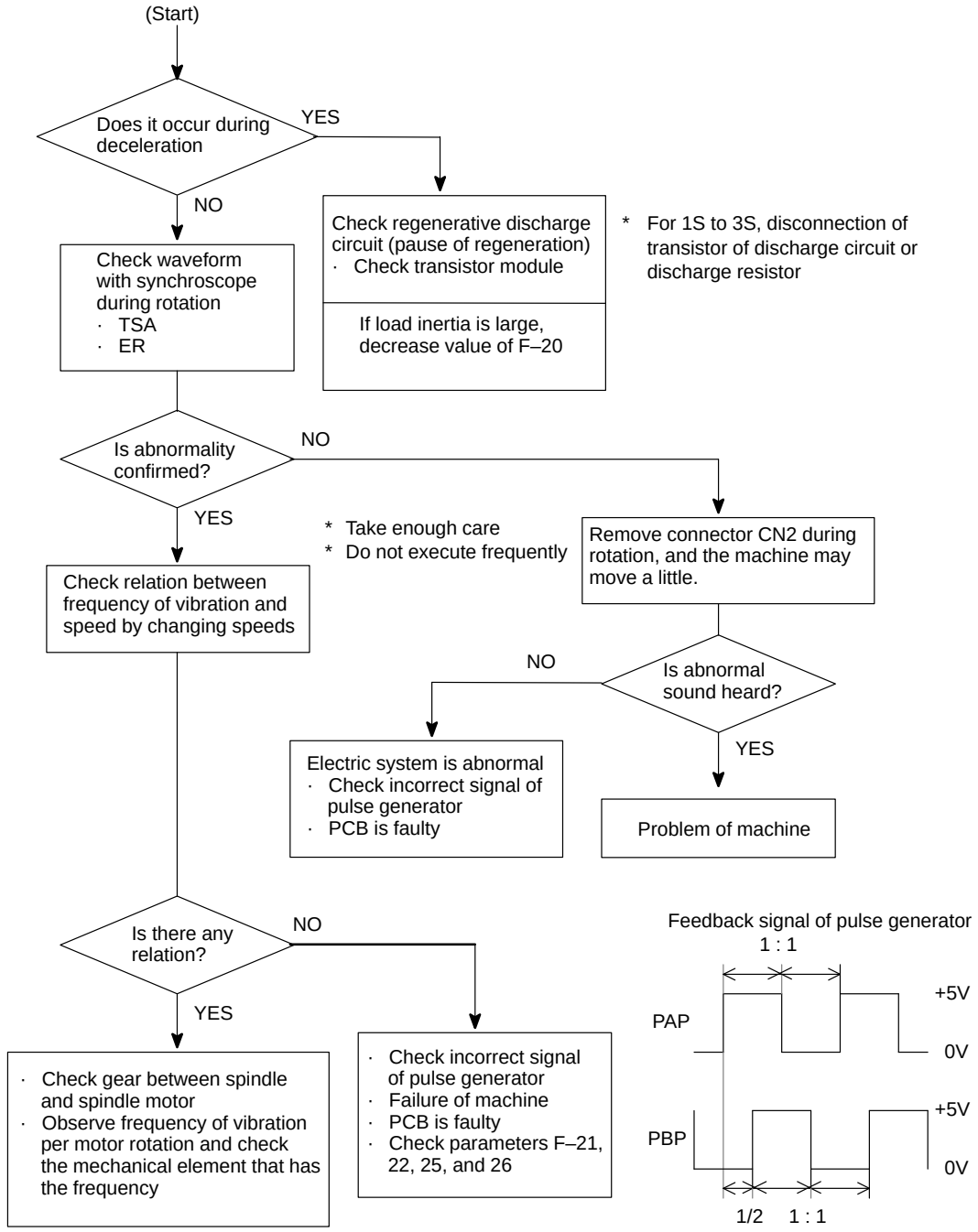

10.9 NO ROTATION OR INCORRECT SPEED

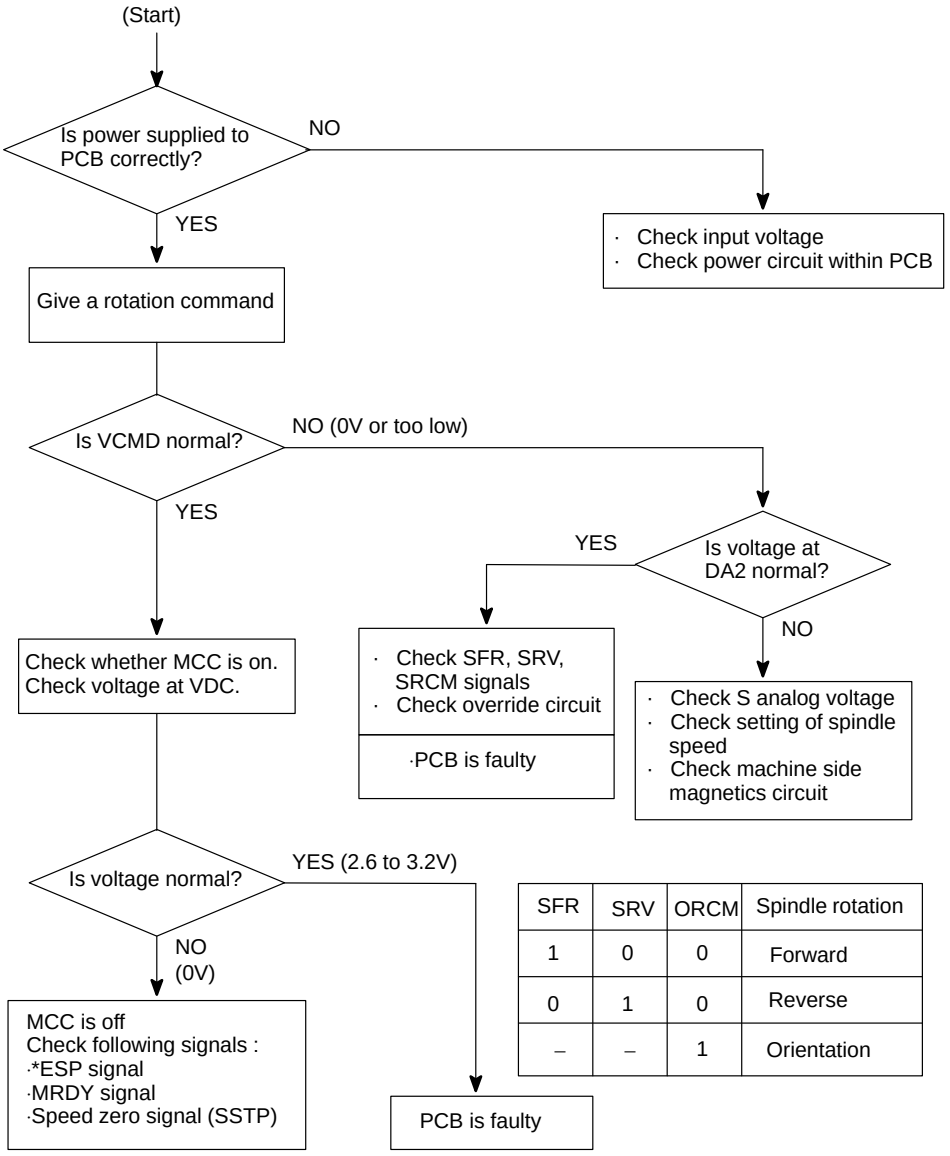

SFR	SRV	ORCM	Spindle rotation
1	0	0	Forward
0	1	0	Reverse
–	–	1	Orientation

Caution

1 Whille you are checking above items, if the system may recover, the spindle may suddenly start its rotation. Therefore, take enough care when you access the spindle or its peripherals.

10.10 CONFIRMATION OF TRANSISTOR MODULE

(1) Remove PCB–1 on the spindle amplifier.
(2) Turn off power of main power supply of machine side and remove the motor power line.
(3) Measure resistance across the following terminals of the transistor module on the circuit board shown below with a tester.

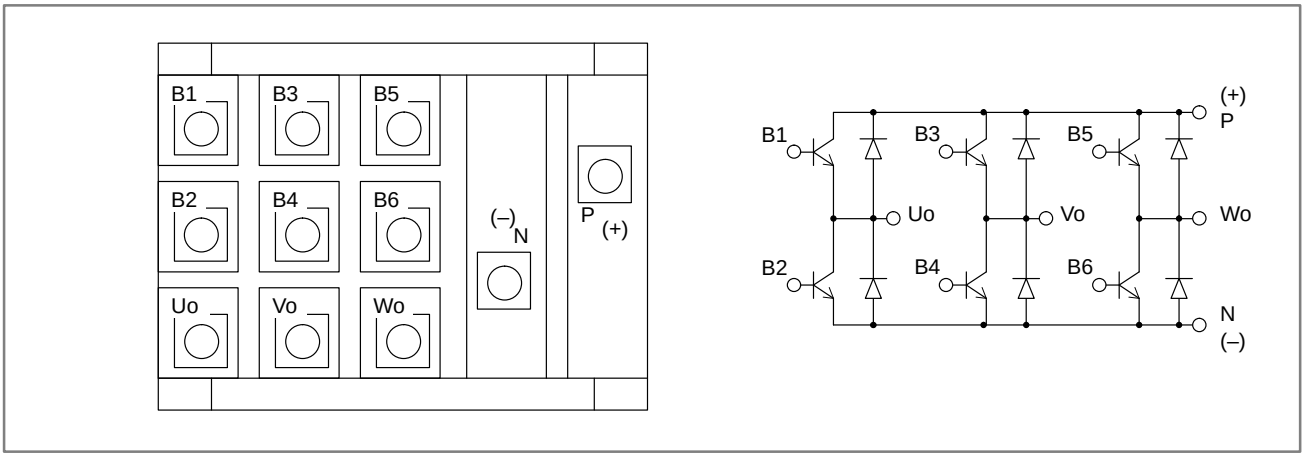

Judgement (Range of tester : x10 ohm)

Terminal	Tester	Normal	Abnormal
C – E	C : +	100 ohms	Short, infinity
	C : –	Infinity	Short, 100 ohms
C – B	C : +	100 ohms	Short, infinity
	C : –	Infinity	Short, 100 ohms
B – E	B : +	100 ohms	Short, infinity
	B : –	100 ohms	Short, infinity

* When a transistor is defective, terminals across collector and emitter, and across collector and base are short–circuited.

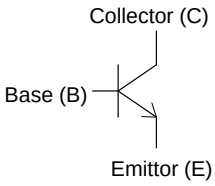

APPENDIXES

A I/O UNIT MODEL A

A.1 SYSTEM CONFIGURATION 426
A.2 HARDWARE CONFIGURATION 426
A.3 LED INDICATION 427
A.4 FUSES 428
A.5 REMOVING A PRINTED CIRCUIT BOARD 429

A.1 SYSTEM CONFIGURATION

Up to 16 FANUC I/O Unit–MODEL A groups can be connected to a CNC through the FANUC I/O Link high–speed serial interface.

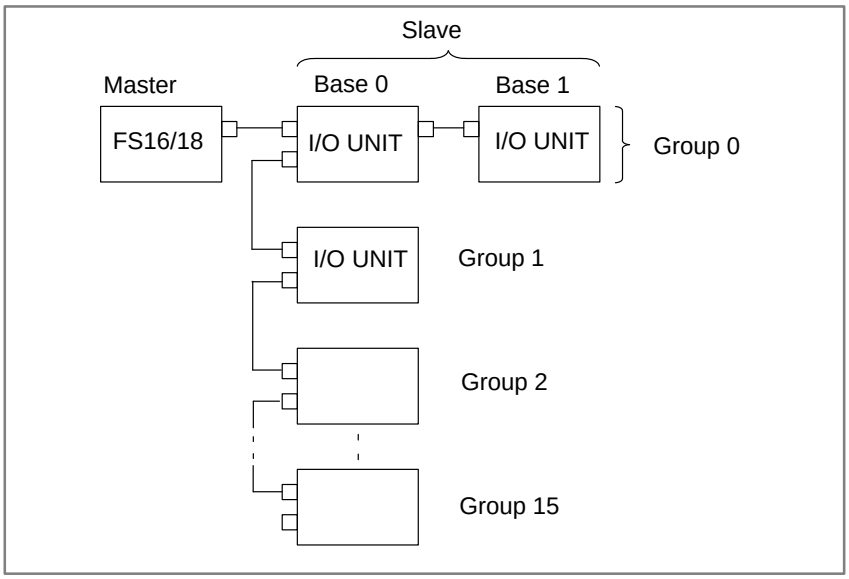

* The number and types of slave units that can be connected for each group are as follows :

- Up to two I/O Units
- One Power Mate
- One Operator's–panel connection unit
- One Series 0–C

A.2 HARDWARE CONFIGURATION

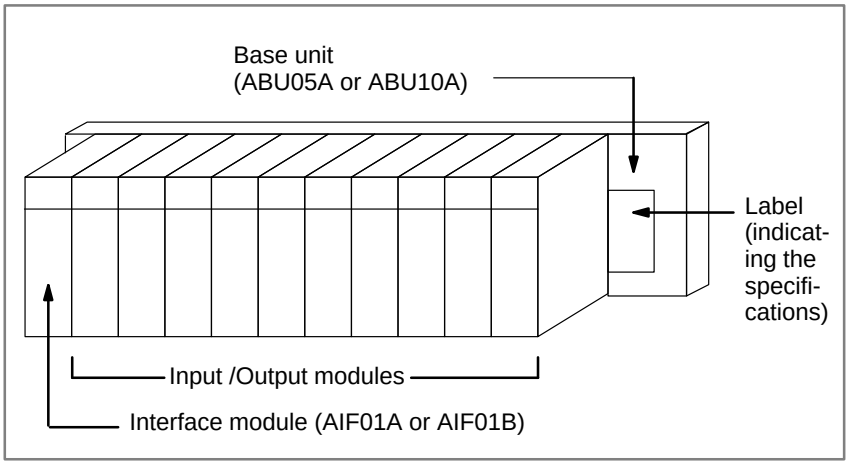

A.3 LED INDICATION

Modules having up to 16 input/output points are provided with LEDs to indicate their statuses.
Use these LED's to assist you with troubleshooting.

AIF01A

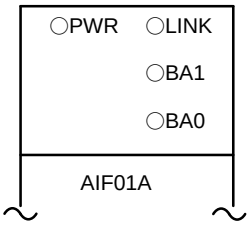

Symbol	Description
PWR	Indicates that the internal 24 VDC power supply is operating normally.
LINK	Indicates that the I/O Link is operating normally.
BA0 BA1	Indicates the number of the base from which data is being transferred. BA1 / BA0 / Base number ○ / ○ / Base #0 ○ / ● / Base #1 ● / ○ / Base #2 ● / ● / Base #3 ●:On ○:Off If the LINK went on once, but then falled, these LEDs indicate the number of the base that was transferring data when the error occurred.

AIF01B

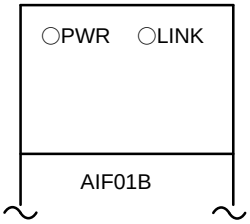

Symbol	Description
PWR	Indicates that the internal 24 VDC power supply is operating normally.
LINK	Indicates that the I/O Link is operating normally.

Input / Output modules (with up to 16 input / output points)

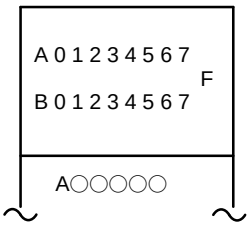

Symbol	Description
A0 – 7 B0 – 7	Indicate the state of an input / output signal (LED on : signal on, LED off : signal off)
F	Indicates that the internal fuse has blown

A.4 FUSES

The following modules provide the corresponding protection fuses. If a fuse blows for any reason , such as the short–circuiting of a cable connected to a load, firt remove the cause of the problem, then replace the fuse.

Module	Indication of whether a fuse has blown	Parts number of fuse	Rated current
AIF01A Interface module	PWR off	A60L–0001–0290#LM32	3.2A
AIF01B Interface module	PWR off	A60L–0001–0290#LM32	3.2A
A0D08C Output module (8 DC points)	F on	A60L–0001–0260#5R00	5A
A0D08D Output module (8 DC points)	F on	A60L–0001–0260#5R00	5A
A0A05E Output module (5 AC points)	F on	A60L–0001–0276#3.15	3.15A
A0A08E Output module (8 AC points)	F on	A60L–0001–0276#3.15	3.15A
A0A12F Output module (12 AC points)	F on	A60L–0001–0276#3.15	3.15A

A.5 REMOVING A PRINTED CIRCUIT BOARD

- **Removing a terminal–box–type input/output module**

1 Remove the terminal box, if necessary.

2 Remove the LED cap by pulling it in the direction indicated by the arrow.

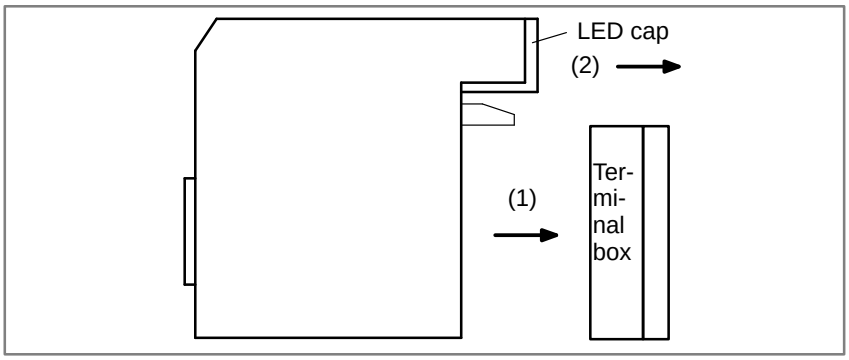

3 While pushing the connector in the direction indicated by the arrow, use a screwdriver to release the two claws on the module case.

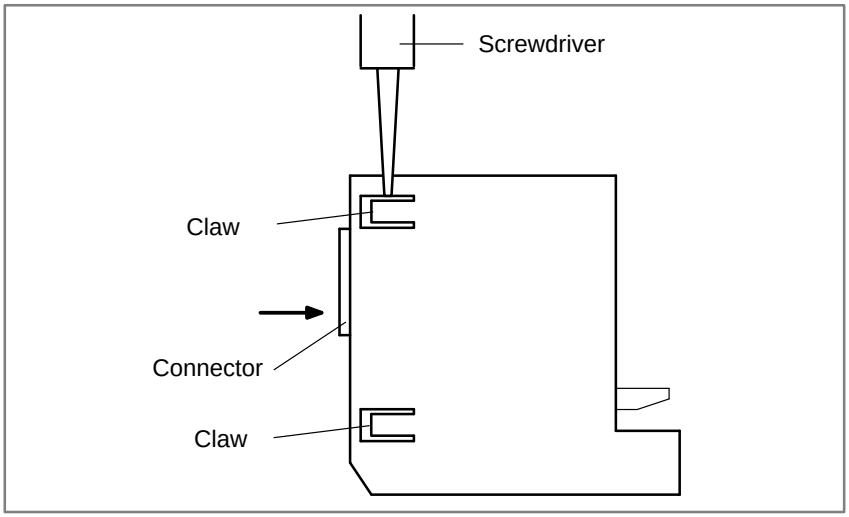

4 As shown on the right, insert a screwdriver into the gap between the module case and the connector of the terminal box. To remove the printed circuit board, push the connector in the direction indicated by arrow B while pushing the screwdriver in the direction indicated by arrow A

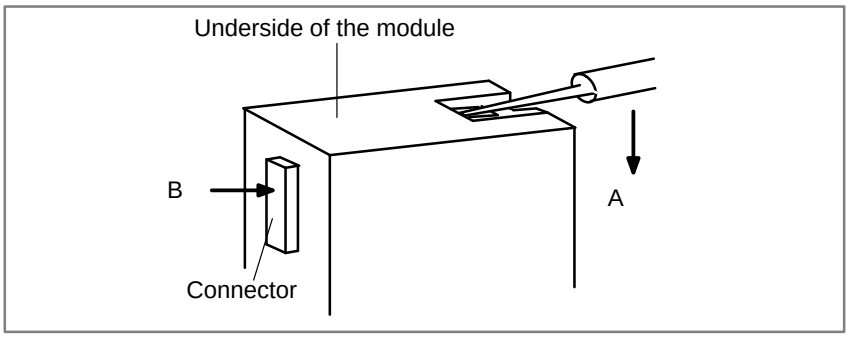

- **Removing a connector–type input/output module**

1 To remove the cover, pull it in the direction indicated by the arrow, while using a screwdriver to release claws A and B on both sides.

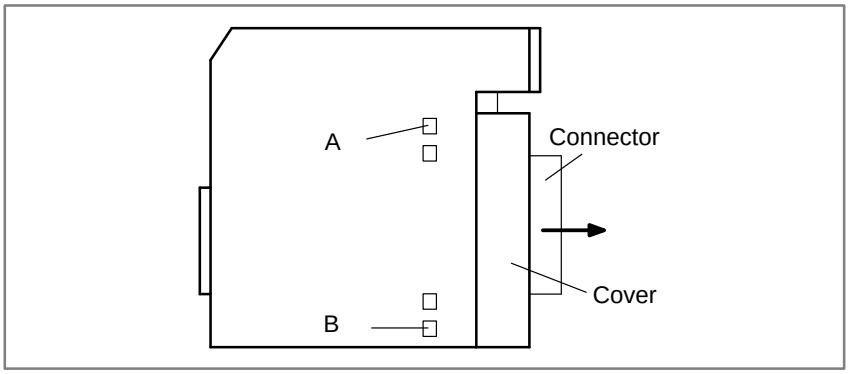

2 To remove the LED cap, pull it in the direction indicated by the arrow.

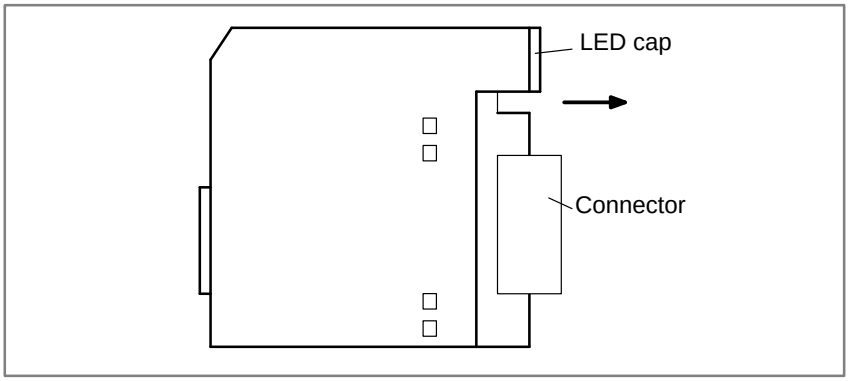

3 While pushing the connector in the direction indicated by the arrow, use a screwdriver to release the two or four claws on the module case. Then, remove the printed circuit board by pushing the connector in the direction indicated by the arrow.

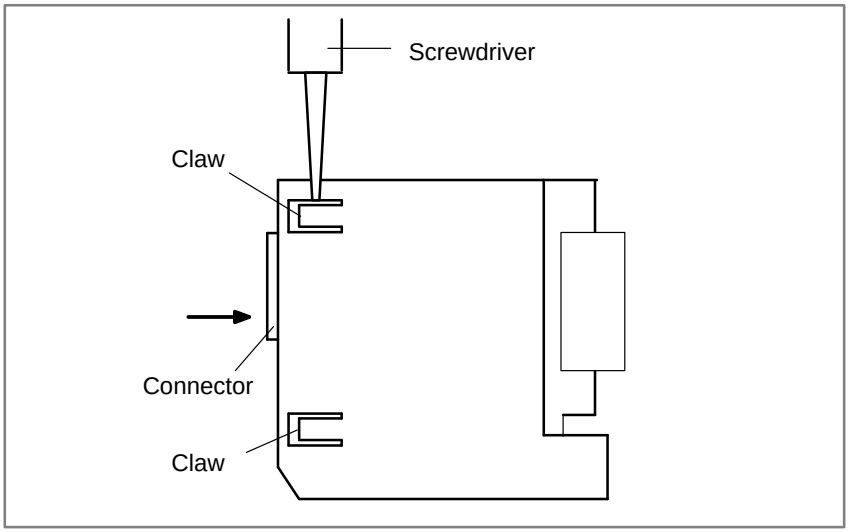

B ALARM LIST

B.1 LIST OF ALARM CODES
(1) Program errors/Alarms on program and operation (P/S alarm) 432
(2) Background edit alarm 448
(3) Absolute pulse coder (APC) alarm 448
(4) Serial pulse coder (SPC) alarms 449
(5) Servo alarms 450
(6) Over travel alarms 452
(7) Overheat alarms 452
(8) Rigid tapping alarms 453
(9) Serial spindle alarms 453
(10) System alarms 455
B.2 LIST OF ALARMS (PMC)
(1) Alarm messages (PMC) 456
(2) Alarm messages (For EDIT 1) 460
(3) Alarm messages (For I/O) 462
B.3 SPINDLE ALARMS (SERIAL SPINDLE) 463
B.4 SPINDLE ALARMS (ANALOG INTERFACE)
(S SERIES AC SPINDLE) 468

B.1 LIST OF ALARM CODES

(1) Program errors /Alarms on program and operation (P/S alarm)

Number	Message	Contents
000	PLEASE TURN OFF POWER	A parameter which requires the power off was input, turn off power.
001	TH PARITY ALARM	TH alarm (A character with incorrect parity was input). Correct the tape.
002	TV PARITY ALARM	TV alarm (The number of characters in a block is odd). This alarm will be generated only when the TV check is effective.
003	TOO MANY DIGITS	Data exceeding the maximum allowable number of digits was input. (Refer to the item of max. programmable dimensions.)
004	ADDRESS NOT FOUND	A numeral or the sign " – " was input without an address at the beginning of a block. Modify the program .
005	NO DATA AFTER ADDRESS	The address was not followed by the appropriate data but was followed by another address or EOB code. Modify the program.
006	ILLEGAL USE OF NEGATIVE SIGN	Sign " – " input error (Sign " – " was input after an address with which it cannot be used. Or two or more " – " signs were input.) Modify the program.
007	ILLEGAL USE OF DECIMAL POINT	Decimal point " . " input error (A decimal point was input after an address with which it can not be used. Or two decimal points were input.) Modify the program.
009	ILLEGAL ADDRESS INPUT	Unusable character was input in significant area. Modify the program.
010	IMPROPER G–CODE	An unusable G code or G code corresponding to the function not provided is specified. Modify the program.
011	NO FEEDRATE COMMANDED	Feedrate was not commanded to a cutting feed or the feedrate was inadequate. Modify the program.
014	ILLEGAL LEAD COMMAND (T series)	In variable lead threading, the lead incremental and decremental outputted by address K exceed the maximum command value or a command such that the lead becomes a negative value is given. Modify the program.
	CAN NOT COMMAND G95 (M series)	A synchronous feed is specified without the option for threading / synchronous feed.
015	TOO MANY AXES COMMANDED	An attempt was made to move the machine along the axes, but the number of the axes exceeded the specified number of axes controlled simultaneously. Alternatively, in a block where where the skip function activated by the torque–limit reached signal (G31 P99/P98) was specified, either moving the machine along an axis was not specified, or moving the machine along multiple axes was specified. Specify movement only along one axis.
	TOO MANY AXES COMMANDED (T series)	An attempt has been made to move the tool along more than the maximum number of simultaneously controlled axes. Alternatively, no axis movement command or an axis movement command for two or more axes has been specified in the block containing the command for skip using the torque limit signal (G31 P99/98). The command must be accompanied with an axis movement command for a single axis, in the same block.
020	OVER TOLERANCE OF RADIUS	In circular interpolation (G02 or G03), difference of the distance between the start point and the center of an arc and that between the end point and the center of the arc exceeded the value specified in parameter No. 3410.

Number	Message	Contents
021	ILLEGAL PLANE AXIS COMMANDED	An axis not included in the selected plane (by using G17, G18, G19) was commanded in circular interpolation. Modify the program.
022	NO CIRCLE RADIUS	The command for circular interpolation lacks arc radius R or coordinate I, J, or K of the distance between the start point to the center of the arc.
023	ILLEGAL RADIUS COMMAND (T series)	In circular interpolation by radius designation, negative value was commanded for address R. Modify the program.
025	CANNOT COMMAND F0 IN G02/G03 (M series)	F0 (fast feed) was instructed by F1 –digit column feed in circular interpolation. Modify the program.
027	NO AXES COMMANDED IN G43/G44 (M series)	No axis is specified in G43 and G44 blocks for the tool length offset type C. Offset is not canceled but another axis is offset for the tool length offset type C. Modify the program.
028	ILLEGAL PLANE SELECT	In the plane selection command, two or more axes in the same direction are commanded. Modify the program.
029	ILLEGAL OFFSET VALUE (M series)	The offset values specified by H code is too large. Modify the program.
	ILLEGAL OFFSET VALUE (T series)	The offset values specified by T code is too large. Modify the program.
030	ILLEGAL OFFSET NUMBER (M series)	The offset number specified by D/H code for tool length offset or cutter compensation is too large. Modify the program.
	ILLEGAL OFFSET NUMBER (T series)	The offset number in T function specified for tool offset is tool large. Modify the program.
031	ILLEGAL P COMMAND IN G10	In setting an offset amount by G10, the offset number following address P was excessive or it was not specified. Modify the program.
032	ILLEGAL OFFSET VALUE IN G10	In setting an offset amount by G10 or in writing an offset amount by system variables, the offset amount was excessive.
033	NO SOLUTION AT CRC (M series)	A point of intersection cannot be determined for cutter compensation. Modify the program.
	NO SOLUTION AT CRC (T series)	A point of intersection cannot be determined for tool nose radius compensation. Modify the program.
034	NO CIRC ALLOWED IN ST–UP / EXT BLK (M series)	The start up or cancel was going to be performed in the G02 or G03 mode in cutter compensation C. Modify the program.
	NO CIRC ALLOWED IN ST–UP / EXT BLK (T series)	The start up or cancel was going to be performed in the G02 or G03 mode in tool nose radius compensation. Modify the program.
035	CAN NOT COMMANDED G39 (M series)	G39 is commanded in cutter compensation B cancel mode or on the plane other than offset plane. Modify the program.
	CAN NOT COMMANDED G31 (T series)	Skip cutting (G31) was specified in tool nose radius compensation mode. Modify the program.
036	CAN NOT COMMANDED G31 (M series)	Skip cutting (G31) was specified in cutter compensation mode. Modify the program.
037	CAN NOT CHANGE PLANE IN CRC (M seires)	G40 is commanded on the plane other than offset plane in cutter compensation B. The plane selected by using G17, G18 or G19 is changed in cutter compensation C mode. Modify the program.
	CAN NOT CHANGE PLANE IN NRC (T seires)	The offset plane is switched in tool nose radius compensation. Modify the program.

Number	Message	Contents
038	INTERFERENCE IN CIRCULAR BLOCK (M seires)	Overcutting will occur in cutter compensation C because the arc start point or end point coincides with the arc center. Modify the program.
	INTERFERENCE IN CIRCULAR BLOCK (T series)	Overcutting will occur in tool nose radius compensation because the arc start point or end point coincides with the arc center. Modify the program.
039	CHF/CNR NOT ALLOWED IN NRC (T series)	Chamfering or corner R was specified with a start–up, a cancel, or switching between G41 and G42 in tool nose radius compensation. The program may cause overcutting to occur in chamfering or corner R. Modify the program.
040	INTERFERENCE IN G90/G94 BLOCK (T series)	Overcutting will occur in tool nose radius compensation in canned cycle G90 or G94. Modify the program.
041	INTERFERENCE IN CRC (M seires)	Overcutting will occur in cutter compensation C. Two or more blocks are consecutively specified in which functions such as the auxiliary function and dwell functions are performed without movement in the cutter compensation mode. Modify the program.
	INTERFERENCE IN NRC (T seires)	Overcutting will occur in tool nose radius compensation. Modify the program.
042	G45/G48 NOT ALLOWED IN CRC (M series)	Tool offset (G45 to G48) is commanded in cutter compensation. Modify the program.
043	ILLEGAL T–CODE COMMAND (M series)	In a system using the DRILL–MATE with an ATC, a T code was not specified together with the M06 code in a block. Alternatively, the Tcode was out of range.
044	G27–G30 NOT ALLOWED IN FIXED CYC (M sries)	One of G27 to G30 is commanded in canned cycle mode. Modify the program.
046	ILLEGAL REFERENCE RETURN COMMAND	Other than P2, P3 and P4 are commanded for 2nd, 3rd and 4th reference position return command.
047	ILLEGAL AXIS SELECT (M series)	Two or more parallel axes (in parallel with a basic axis) have been specified upon start–up of three–dimensional tool compensation or three–dimensional coordinate conversion.
048	BASIC 3 AXIS NOT FOUND (M series)	Start–up of three–dimensional tool compensation or three–dimensional coordinate conversion has been attempted, but the three basic axes used when Xp, Yp, or Zp is omitted are not set in parameter No. 1022.
050	CHF/CNR NOT ALLOWED IN THRD BLK (M series)	Optional chamfering or corner R is commanded in the thread cutting block. Modify the program.
	CHF/CNR NOT ALLOWED IN THRD BLK(T series)	Chamfering or corner R is commanded in the thread cutting block. Modify the program.
051	MISSING MOVE AFTER CHF/CNR (M series)	Improper movement or the move distance was specified in the block next to the optional chamfering or corner R block. Modify the program.
	MISSING MOVE AFTER CHF/CNR (T series)	Improper movement or the move distance was specified in the block next to the chamfering or corner R block. Modify the program.
052	CODE IS NOT G01 AFTER CHF/CNR (M series)	The block next to the chamfering or corner R block is not G01,G02 or G03. Modify the program.
	CODE IS NOT G01 AFTER CHF/CNR (T series)	The block next to the chamfering or corner R block is not G01. Modify the program.

Number	Message	Contents
053	TOO MANY ADDRESS COMMANDS (M series)	For systems without the arbitary angle chamfering or corner R cutting, a comma was specified. For systems with this feature, a comma was followed by something other than R or C Correct the program.
	TOO MANY ADDRESS COMMANDS (T seires)	In the chamfering and corner R commands, two or more of I, K and R are specified. Otherwise, the character after a comma(”,”) is not C or R in direct drawing dimensions programming. Modify the program.
054	NO TAPER ALLOWED AFTER CHF/CNR	A block in which chamfering in the specified angle or the corner R was specified includes a taper command. Modify the program.
055	MISSING MOVE VALUE IN CHF/CNR (M series)	In the arbitrary angle chamfering or corner R block, the move distance is less than chamfer or corner R amount.
	MISSING MOVE VALUE IN CHF/CNR (T series)	In chamfering or corner R block, the move distance is less than chamfer or corner R amount.
056	NO END POINT & ANGLE IN CHF/CNR (T series)	Neither the end point nor angle is specified in the command for the block next to that for which only the angle is specified (A). In the chamfering comman, I(K) is commanded for the X(Z) axis.
057	NO SOLUTION OF BLOCK END (T series)	Block end point is not calculated correctly in direct dimension drawing programming.
058	END POINT NOT FOUND (M series)	In a arbitrary angle chamfering or corner R cutting block, a specified axis is not in the selected plane. Correct the program.
	END POINT NOT FOUND (T series)	Block end point is not found in direct dimension drawing programming.
059	PROGRAM NUMBER NOT FOUND	In an external program number search, a specified program number was not found. Otherwise, a program specified for searching is being edited in background processing. Check the program number and external signal. Or discontinue the background eiting.
060	SEQUENCE NUMBER NOT FOUND	Commanded sequence number was not found in the sequence number search. Check the sequence number.
061	ADDRESS P/Q NOT FOUND IN G70–G73 (T series)	Address P or Q is not specified in G70, G71, G72, or G73 command. Modify the program.
062	ILLEGAL COMMAND IN G71–G76 (T series)	1. The depth of cut in G71 or G72 is zero or negative value. 2. The repetitive count in G73 is zero or negative value. 3. the negative value is specified to Δi or Δk is zero in G74 or G75. 4. A value other than zero is specified to address U or W though Δi or Δk is zero in G74 or G75. 5. A negative value is specified to Δd, thoughthe relief direction in G74 or G75 is determined. 6. Zero or a negative value is specified to the height of thread or depth of cut of first time in G76. 7. The specified minimum depth of cut in G76 is greater than the height of thread. 8. An unusable angle of tool tip is specified in G76. Modify the program.
063	SEQUENCE NUMBER NOT FOUND (T series)	The sequence number specified by address P in G70, G71, G72, or G73 command cannot be searched. Modify the program.
064	SHAPE PROGRAM NOT MONOTONOUSLY (T series)	A target shape which cannot be made by monotonic machining was specified in a repetitive canned cycle (G71 or G72).

Number	Message	Contents
065	ILLEGAL COMMAND IN G71–G73 (T series)	1. G00 or G01 is not commanded at the block with the sequence number which is specified by address P in G71, G72, or G73 command. 2. Address Z(W) or X(U) was commanded in the block with a sequence number which is specified by address P in G71 or G72, respectively. Modify the program.
066	IMPROPER G–CODE IN G71–G73 (T series)	An unallowable G code was commanded beween two blocks specified by address P in G71, G72, or G73. Modify the program.
067	CAN NOT ERROR IN MDI MODE (T series)	G70, G71, G72, or G73 command with address P and Q. Modify the program.
069	FORMAT ERROR IN G70–G73 (T series)	The final move command in the blocks specified by P and Q of G70, G71, G72, and G73 ended with chamfering or corner R. Modify the program.
070	NO PROGRAM SPACE IN MEMORY	The memory area is insufficient. Delete any unnecessary programs, then retry.
071	DATA NOT FOUND	The address to be searched was not found. Or the program with specified program number was not found in program number search. Check the data.
072	TOO MANY PROGRAMS	The number of programs to be stored exceeded 63 (basic), 125 (option), 200 (option), 400 (option) or 1000 (option). Delete unnecessary programs and execute program registeration again.
073	PROGRAM NUMBER ALREADY IN USE	The commanded program number has already been used. Change the program number or delete unnecessary programs and execute program registeration again.
074	ILLEGAL PROGRAM NUMBER	The program number is other than 1 to 9999. Modify the program number.
075	PROTECT	An attempt was made to register a program whose number was protected.
076	ADDRESS P NOT DEFINED	Address P (program number) was not commanded in the block which includes an M98, G65, or G66 command. Modify the program.
077	SUB PROGRAM NESTING ERROR	The subprogram was called in five folds. Modify the program.
078	NUMBER NOT FOUND	A program number or a sequence number which was specified by address P in the block which includes an M98, M99, M65 or G66 was not found. The sequence number specified by a GOTO statement was not found. Otherwise, a called program is being edited in background processing. Correct the program, or discontinue the background editing.
079	PROGRAM VERIFY ERROR	In memory or program collation,a program in memory does not agree with that read from an external I/O device. Check both the programs in memory and those from the external device.
080	G37 ARRIVAL SIGNAL NOT ASSERTED (M series)	In the automatic tool length measurement function (G37), the measurement position reach signal (XAE, YAE, or ZAE) is not turned on within an area specified in parameter 6254 6255 (value ε). This is due to a setting or operator error.
	G37 ARRIVAL SIGNAL NOT ASSERTED (T series)	In the automatic tool compensation function (G36, G37), the measurement position reach signal (XAE or ZAE) is not turned on within an area specified in parameter 6254 (value ε). This is due to a setting or operator error.

Number	Message	Contents
081	OFFSET NUMBER NOT FOUND IN G37 (M series)	Tool length automatic measurement (G37) was specified without a H code. (Automatic tool length measurement function) Modify the program.
	OFFSET NUMBER NOT FOUND IN G37 (T series)	Automatic tool compensation (G36, G37) was specified without a T code. (Automatic tool compensation function) Modify the program.
082	H–CODE NOT ALLOWED IN G37 (M series)	H code and automatic tool compensation (G37) were specified in the same block. (Automatic tool length measurement function) Modify the program.
	T–CODE NOT ALLOWED IN G37 (T series)	T code and automatic tool compensation (G36, G37) were specified in the same block. (Automatic tool compensation function) Modify the program.
083	ILLEGAL AXIS COMMAND IN G37 (M series)	In automatic tool length measurement, an invalid axis was specified or the command is incremental. Modify the program.
	ILLEGAL AXIS COMMAND IN G37 (T series)	In automatic tool compensation (G36, G37), an invalid axis was specified or the command is incremental. Modify the program.
085	COMMUNICATION ERROR	When entering data in the memory by using Reader / Puncher interface, an overrun, parity or framing error was generated. The number of bits of input data or setting of baud rate or specification No. of I/O unit is incorrect.
086	DR SIGNAL OFF	When entering data in the memory by using Reader / Puncher interface, the ready signal (DR) of reader / puncher was turned off. Power supply of I/O unit is off or cable is not connected or a P.C.B. is defective.
087	BUFFER OVERFLOW	When entering data in the memory by using Reader / Puncher interface, though the read terminate command is specified, input is not interrupted after 10 characters read. I/O unit or P.C.B. is defective.
088	LAN FILE TRANS ERROR (CHANNEL–1)	File data transfer via OSI–ETHERNET has been stopped due to a transfer error.
089	LAN FILE TRANS ERROR (CHANNEL–2)	File data transfer via OSI–ETHERNET has been stopped due to a transfer error.
090	REFERENCE RETURN INCOMPLETE	The reference position return cannot be performed normally because the reference position return start point is too close to the reference position or the speed is too slow. Separate the start point far enough from the reference position, or specify a sufficiently fast speed for reference position return. Check the program contents.
091	REFERENCE RETURN INCOMPLETE	Manual reference position return cannot be performed when automatic operation is halted.
092	AXES NOT ON THE REFERENCE POINT	The commanded axis by G27 (Reference position return check) did not return to the reference position.
094	P TYPE NOT ALLOWED (COORD CHG)	P type cannot be specified when the program is restarted. (After the automatic operation was interrupted, the coordinate system setting operation was performed.) Perform the correct operation according to th operator’s manual.
095	P TYPE NOT ALLOWED (EXT OFS CHG)	P type cannot be specified when the program is restarted. (After the automatic operation was interrupted, the external workpiece offset amount changed.) Perform the correct operation according to th operator’s manual.
096	P TYPE NOT ALLOWED (WRK OFS CHG)	P type cannot be specified when the program is restarted. (After the automatic operation was interrupted, the workpiece offset amount changed.) Perform the correct operation according to the operator’s manual.

Number	Message	Contents
097	P TYPE NOT ALLOWED (AUTO EXEC)	P type cannot be directed when the program is restarted. (After power ON, after emergency stop or P / S 94 to 97 reset, no automatic operation is performed.) Perform automatic operation.
098	G28 FOUND IN SEQUENCE RETURN	A command of the program restart was specified without the reference position return operation after power ON or emergency stop, and G28 was found during search. Perform the reference position return.
099	MDI EXEC NOT ALLOWED AFT. SEARCH	After completion of search in program restart, a move command is given with MDI. Move axis before a move command or don't interrupt MDI operation.
100	PARAMETER WRITE ENABLE	On the PARAMETER(SETTING) screen, PWE(parameter writing enabled) is set to 1. Set it to 0, then reset the system.
101	PLEASE CLEAR MEMORY	The power turned off while rewriting the memory by program edit operation. If this alarm has occurred, press <RESET> while pressing <PROG>, and only the program being edited will be deleted. Register the deleted program.
109	P/S ALARM	A value other than 0 or 1 was specified after P in the G08 code, or no value was specified.
110	DATA OVERFLOW	The absolute value of fixed decimal point display data exceeds the allowable range. Modify the program.
111	CALCULATED DATA OVERFLOW	The result of calculation turns out to be invalid, an alarm No.111 is issued. -10^{47} to -10^{-29}, 0, 10^{-29} to 10^{47} Modify the program.
112	DIVIDED BY ZERO	Division by zero was specified. (including tan 90°) Modify the program.
113	IMPROPER COMMAND	A function which cannot be used in custom macro is commanded. Modify the program.
114	FORMAT ERROR IN MACRO	There is an error in other formats than <Formula>. Modify the program.
115	ILLEGAL VARIABLE NUMBER	A value not defined as a variable number is designated in the custom macro or in high–speed cycle machining. The header contents are improper. This alarm is given in the following cases: High speed cycle machining 1. The header corresponding to the specified machining cycle number called is not found. 2. The cycle connection data value is out of the allowable range (0 – 999). 3. The number of data in the header is out of the allowable range (0 – 32767). 4. The start data variable number of executable format data is out of the allowable range (#20000 – #85535). 5. The last storing data variable number of executable format data is out of the allowable range (#85535). 6. The storing start data variable number of executable format data is overlapped with the variable number used in the header. Modify the program.
116	WRITE PROTECTED VARIABLE	The left side of substitution statement is a variable whose substitution is inhibited. Modify the program.
118	PARENTHESIS NESTING ERROR	The nesting of bracket exceeds the upper limit (quintuple). Modify the program.

Number	Message	Contents
119	ILLEGAL ARGUMENT	The SQRT argument is negative. Or BCD argument is negative, and other values than 0 to 9 are present on each line of BIN argument. Modify the program.
122	FOUR FOLD MACRO MODAL–CALL	The macro modal call is specified four fold. Modify the program.
123	CAN NOT USE MACRO COMMAND IN DNC	Macro control command is used during DNC operation. Modify the program.
124	MISSING END STATEMENT	DO – END does not correspond to 1 : 1. Modify the program.
125	FORMAT ERROR IN MACRO	<Formula> format is erroneous. Modify the program.
126	ILLEGAL LOOP NUMBER	In DOn, 1≦ n ≦3 is not established. Modify the program.
127	NC, MACRO STATEMENT IN SAME BLOCK	NC and custom macro commands coexist. Modify the program.
128	ILLEGAL MACRO SEQUENCE NUMBER	The sequence number specified in the branch command was not 0 to 9999. Or, it cannot be searched. Modify the program.
129	ILLEGAL ARGUMENT ADDRESS	An address which is not allowed in <Argument Designation > is used. Modify the program.
130	ILLEGAL AXIS OPERATION	An axis control command was given by PMC to an axis controlled by CNC. Or an axis control command was given by CNC to an axis controlled by PMC. Modify the program.
131	TOO MANY EXTERNAL ALARM MESSAGES	Five or more alarms have generated in external alarm message. Consult the PMC ladder diagram to find the cause.
132	ALARM NUMBER NOT FOUND	No alarm No. concerned exists in external alarm message clear. Check the PMC ladder diagram.
133	ILLEGAL DATA IN EXT. ALARM MSG	Small section data is erroneous in external alarm message or external operator message. Check the PMC ladder diagram.
135	ILLEGAL ANGLE COMMAND (M series)	The index table indexing positioning angle was instructed in other than an integral multiple of the value of the minimum angle. Modify the program.
	SPINDLE ORIENTATION PLEASE (T series)	Without any spindle orientation , an attept was made for spindle indexing. Perform spindle orientation.
136	ILLEGAL AXIS COMMAND (M series)	In index table indexing.Another control axis was instructed together with the B axis. Modify the program.
	C/H–CODE & MOVE CMD IN SAME BLK. (T series)	A move command of other axes was specified to the same block as spindle indexing addresses C, H. Modify the program.
137	M–CODE & MOVE CMD IN SAME BLK.	A move command of other axes was specified to the same block as M–code related to spindle indexing. Modify the program.
138	SUPERIMPOSED DATA OVERFLOW	The total distribution amount of the CNC and PMC is too large during superimposed control of the extended functions for PMC axis control.
139	CAN NOT CHANGE PMC CONTROL AXIS	An axis is selected in commanding by PMC axis control. Modify the program.
141	CAN NOT COMMAND G51 IN CRC (M series)	G51 (Scaling ON) is commanded in the tool offset mode. Modify the program.
142	ILLEGAL SCALE RATE (M series)	Scaling magnification is commanded in other than 1 – 999999. Correct the scaling magnification setting (G51 P_p ..... or parameter 5411 or 5421).
143	SCALED MOTION DATA OVERFLOW (M series)	The scaling results, move distance, coordinate value and circular radius exceed the maximum command value. Correct the program or scaling mangification.
144	ILLEGAL PLANE SELECTED (M series)	The coordinate rotation plane and arc or cutter compensation C plane must be the same. Modify the program.

Number	Message	Contents
145	ILLEGAL CONDITIONS IN POLAR COORDINATE INTERPOLATION	The conditions are incorrect when the polar coordinate interpolation starts or it is canceled. 1) In modes other than G40, G12.1/G13.1 was specified. 2) An error is found in the plane selection. Parameters No. 5460 and No. 5461 are incorrectly specified. Modify the value of program or parameter.
146	IMPROPER G CODE	G codes which cannot be specified in the polar coordinate interpolation mode was specified. See section II–4.4 and modify the program.
148	ILLEGAL SETTING DATA (M series)	Automatic corner override deceleration rate is out of the settable range of judgement angle. Modify the parameters (No.1710 to No.1714)
149	FORMAT ERROR IN G10L3 (M series)	A code other than Q1,Q2,P1 or P2 was specified as the life count type in the extended tool life management.
150	ILLEGAL TOOL GROUP NUMBER	Tool Group No. exceeds the maximum allowable value. Modify the program.
151	TOOL GROUP NUMBER NOT FOUND	The tool group commanded in the machining program is not set. Modify the value of program or parameter.
152	NO SPACE FOR TOOL ENTRY	The number of tools within one group exceeds the maximum value registerable. Modify the number of tools.
153	T–CODE NOT FOUND	In tool life data registration, a T code was not specified where one should be. Correct the program.
154	NOT USING TOOL IN LIFE GROUP (M series)	When the group is not commanded, H99 or D99 was commanded. Correct the program.
155	ILLEGAL T–CODE IN M06 (M series)	In the machining program, M06 and T code in the same block do not correspond to the group in use. Correct the program.
	ILLEGAL T–CODE IN M06 (T series)	Group No.ΔΔ which is specified with TΔΔ 88 of the machining program do not included in the tool group in use. Correct the program.
156	P/L COMMAND NOT FOUND	P and L commands are missing at the head of program in which the tool group is set. Correct the program.
157	TOO MANY TOOL GROUPS	The number of tool groups to be set exceeds the maximum allowable value. (See parameter No. 6800 bit 0 and 1) Modify the program.
158	ILLEGAL TOOL LIFE DATA	The tool life to be set is too excessive. Modify the setting value.
159	TOOL DATA SETTING INCOMPLETE	During executing a life data setting program, power was turned off. Set again.
160	MISMATCH WATING M–CODE T series (At two–path)	Diffrent M code is commanded in heads 1 and 2 as waiting M code. Modify the program.
	G72.1 NESTING ERROR (M series)	A subprogram which performs rotational copy with G72.1 contains another G72.1 command.
161	G72.1 NESTING ERROR (M series)	A subprogram which performs parallel copy with G72.2 contains another G72.2 command.
163	COMMAND G68/G69 INDEPENDENTLY T series (At two–path)	G68 and G69 are not independently commanded in balance cut. Modify the program.
169	ILLEGAL TOOL GEOMETRY DATA T series (At two–path)	Incorrect tool figure data in interference check. Set correct data, or select correct tool figure data.
175	ILLEGAL G107 COMMAND	Conditions when performing circular interpolation start or cancel not correct. To change the mode to the cylindrical interpolation mode, specify the command in a format of “G07.1 rotation–axis name radius of cylinder.”

Number	Message	Contents
176	IMPROPER G–CODE IN G107 (M series)	Any of the following G codes which cannot be specified in the cylindrical interpolation mode was specified. 1) G codes for positioning: G28,, G73, G74, G76, G81 – G89, including the codes specifying the rapid traverse cycle 2) G codes for setting a coordinate system: G52,G92, 3) G code for selecting coordinate system: G53 G54–G59 Modify the program.
	IMPROPER G–CODE IN G107 (T series)	Any of the following G codes which cannot be specified in the cylindrical interpolation mode was specified. 1) G codes for positioning: G28, G76, G81 – G89, including the codes specifying the rapid traverse cycle 2) G codes for setting a coordinate system: G50, G52 3) G code for selecting coordinate system: G53 G54–G59 Modify the program.
177	CHECK SUM ERROR (G05 MODE)	Check sum error Modify the program.
178	G05 COMMANDED IN G41/G42 MODE	G05 was commanded in the G41/G42 mode. Correct the program.
179	PARAM. (NO. 7510) SETTING ERROR	The number of controlled axes set by the parameter 7510 exceeds the maximum number. Modify the parameter setting value.
180	COMMUNICATION ERROR (REMOTE BUF)	Remote buffer connection alarm has generated. Confirm the number of cables, parameters and I/O device.
181	FORMAT ERROR IN G81 BLOCK (M series)	G81 block format error (hobbing machine) 1) T (number of teeth) has not been instructed. 2) Data outside the command range was instructed by either T, L, Q or P. Modify the program.
182	G81 NOT COMMANDED (M series)	G83 (C axis servo lag quantity offset) was instructed though synchronization by G81 has not been instructed. Correct the program. (hobbing machine)
183	DUPLICATE G83 (COMMANDS) (M series)	G83 was instructed before canceled by G82 after compensating for the C axis servo lag quantity by G83. (hobbing machine)
184	ILLEGAL COMMAND IN G81 (M series)	A command not to be instructed during synchronization by G81 was instructed. (hobbing machine) 1) A C axis command by G00, G27, G28, G29, G30, etc. was instructed. 2) Inch/Metric switching by G20, G21 was instructed.
185	RETURN TO REFERENCE POINT (M series)	G81 was instructed without performing reference position return after power on or emergency stop. (hobbing machine) Perform reference position return.
186	PARAMETER SETTING ERROR (M series)	Parameter error regarding G81 (hobbing machine) 1) The C axis has not been set to be a rotary axis. 2) A hob axis and position coder gear ratio setting error Modify the parameter.
190	ILLEGAL AXIS SELECT (M series)	In the constant surface speed control, the axis specification is wrong. (See parameter No. 3770.) The specified axis command (P) contains an illegal value. Correct the program.
194	SPINDLE COMMAND IN SYNCHRO–MODE	A contour control mode, spindle positioning (Cs–axis control) mode, or rigid tapping mode was specified during the serial spindle synchronous control mode. Correct the program so that the serial spindle synchronous control mode is released in advance.

Number	Message	Contents
195	MODE CHANGE ERROR	Switching command to contouring mode, Cs axis control or rigid tap mode or switching to spindle command mode is not correctly completed. (This occurs when the response to switch to the spindle control unit side with regard to the switching command from the NC is incorrect. This alarm is not for the purposes of warning against mistakes in operation, but because continuing operation in this condition can be dangerous it is a P/S alarm.)
197	C–AXIS COMMANDED IN SPINDLE MODE	The program specified a movement along the Cs–axis when the signal CON(DGN=G027#7) was off. Correct the program, or consult the PMC ladder diagram to find the reason the signal is not turned on.
199	MACRO WORD UNDEFINED	Undefined macro word was used. Modify the custom macro.
200	ILLEGAL S CODE COMMAND	In the rigid tap, an S value is out of the range or is not specified. Modify the program.
201	FEEDRATE NOT FOUND IN RIGID TAP	In the rigid tap, no F value is specified. Correct the program.
202	POSITION LSI OVERFLOW	In the rigid tap, spindle distribution value is too large. (System error)
203	PROGRAM MISS AT RIGID TAPPING	In the rigid tap, position for a rigid M code (M29) or an S command is incorrect. Modify the program.
204	ILLEGAL AXIS OPERATION	In the rigid tap, an axis movement is specified between the rigid M code (M29) block and G84 or G74 for M series (G84 or G88 for T series) block. Modify the program.
205	RIGID MODE DI SIGNAL OFF	Rigid mode DI signal is not ON when G84 or G74 for M series (G84 or G88 for T series) is executed though the rigid M code (M29) is specified.Consult the PMC ladder diagram to find the reason the DI signal (DGNG061.1) is not turned on.
206	CAN NOT CHANGE PLANE (RIGID TAP) (M series)	Plane changeover was instructed in the rigid mode. Correct the program.
210	CAN NOT COMAND M198/M199	M198 and M199 are executed in the schedule operation. M198 is executed in the DNC operation. Modify the program. 1) The execution of an M198 or M99 command was attempted during scheduled operation. Alternatively, the execution of an M198 command was attempted during DNC operation. Correct the program. 2) The execution of an M99 command was attempted by an interrupt macro during pocket machining in a multiple repetitive canned cycle.
211	G31 (HIGH) NOT ALLOWED IN G99	G31 is commanded in the per revolution command when the high–speed skip option is provided. Modify the program.
212	ILLEGAL PLANE SELECT (M series)	The arbitrary angle chamfering or a corner R is commanded or the plane including an additional axis. Correct the program.
	ILLEGAL PLANE SELECT (T series)	The direct drawing dimensions programming is commanded for the plane other than the Z–X plane. Correct the program.

Number	Message	Contents
213	ILLEGAL COMMAND IN SYN-CHRO–MODE	Movement is commanded for the axis to be synchronously controlled. Any of the following alarms occurred in the operation with the simple synchronization control. 1) The program issued the move command to the slave axis. 2) The program issued the manual continuous feed/manual handle feed/incremental feed command to the slave axis. 3) The program issued the automatic reference position return command without specifying the manual reference position return after the power was turned on. 4) The difference between the position error amount of the master and slave axes exceeded the value specified in parameter NO.8313.
	ILLEGAL COMMAND IN SYN-CHRO–MODE (T series)	A move command has been specified for an axis subject to synchro-nous control.
214	ILLEGAL COMMAND IN SYN-CHRO–MODE	Coordinate system is set or tool compensation of the shift type is executed in the synchronous control. Correct the program.
217	DUPLICATE G51.2 (COMMANDS) (T series)	G51.2/G251 is further commanded in the G51.2/G251 mode. Modify the program.
218	NOT FOUND P/Q COMMAND IN G251 (T series)	P or Q is not commanded in the G251 block, or the command value is out of the range. Modify the program.
219	COMMAND G250/G251 INDEPEN-DENTLY (T series)	G251 and G250 are not independent blocks.
220	ILLEGAL COMMAND IN SYNCHR–MODE (T series)	In the synchronous operation, movement is commanded by the NC program or PMC axis control interface for the synchronous axis.
221	ILLEGAL COMMAND IN SYNCHR–MODE (T series)	Polygon machining synchronous operation and axis control or bal-ance cutting are executed at a time. Modify the program.
222	DNC OP. NOT ALLOWED IN BG.–EDIT (M series)	Input and output are executed at a time in the background edition. Execute a correct operation.
224	RETURN TO REFERENCE POINT (M series)	Reference position return has not been performed before the auto-matic operation starts. Perform reference position return only when bit 0 of parameter 1005 is 0.
	TURN TO REFERENCE POINT (T series)	Reference position return is necessary before cycle start.
225	SYNCHRONOUS/MIXED CONTROL ERROR T series (At two–path)	This alarm is generated in the following circumstances. (Searched for during synchronous and mixed control command. 1 When there is a mistake in axis number parameter setting. 2 When there is a mistake in control commanded. Modify the program or the parameter.
226	ILLEGAL COMMAND IN SYNCHRO–MODE T series (At two–path)	A travel command has been sent to the axis being synchronized in synchronous mode. Modify the program or the parameter.
229	CAN NOT KEEP SYNCHRO–STATE (T series)	This alarm is generated in the following circumstances. 1 When the synchro/mixed state could not be kept due to system overload. 2 The above condition occurred in CMC devices (hardware) and synchro–state could not be kept. (This alarm is not generated in normal use conditions.)
230	R CODE NOT FOUND (GS series)	The infeed quantity R has not been instructed for the G161 block. Or the R command value is negative. Correct the program.

Number	Message	Contents
231	ILLEGAL FORMAT IN G10 OR L50	Any of the following errors occurred in the specified format at the programmable–parameter input. 1 Address N or R was not entered. 2 A number not specified for a parameter was entered. 3 The axis number was too large. 4 An axis number was not specified in the axis–type parameter. 5 An axis number was specified in the parameter which is not an axis type. Correct the program. 6 An attempt was made to reset bit 4 of parameter 3202 (NE9) or change parameter 3210 (PSSWD) when they are protected by a password. Correct the program.
232	TOO MANY HELICAL AXIS COMMANDS (M series)	Three or more axes (in the normal direction control mode two or more axes) were specified as helical axes in the helical interpolation mode.
233	DEVICE BUSY	When an attempt was made to use a unit such as that connected via the RS–232–C interface, other users were using it.
239	BP/S ALARM	While punching was being performed with the function for controlling external I/O units ,background editing was performed.
240	BP/S ALARM	Background editing was performed during MDI operation.
241	ILLEGAL FORMAT IN G02.2/G03.2 (M series)	The end point, I, J, K, or R is missing from a command for involute interpolation.
242	ILLEGAL COMMAND IN G02.2/G03.2 (M series)	An invalid value has been specified for involute interpolation. • The start or end point is within the basic circle. • I, J, K, or R is set to 0. • The number of rotations between the start of the involute curve and the start or end point exceeds 100.
243	OVER TOLERANCE OF END POINT (M series)	The end point is not on the involute curve which includes the start point and thus falls outside the range specified with parameter No. 5610.
244	P/S ALARM (T series)	In the skip function activated by the torque limit signal, the number of accumulated erroneous pulses exceed 32767 before the signal was input. Therefore, the pulses cannot be corrected with one distribution. Change the conditions, such as feed rates along axes and torque limit, and try again.
245	T–CODE NOT ALOWEE IN THIS BLOCK (T series)	One of the G codes, G50, G10, and G04, which cannot be specified in the same block as a T code, was specified with a T code.
250	Z AXIS WRONG COMMAND (ATC) (M series)	A value for the Z–axis has been specified in a block for the tool exchange command (M06T_) on a system with DRILL–MATE ARC installed.
251	ATC ERROR (M series)	This alarm is issued in the following cases (DRILL–MATE): • An M06T_ command contains an unusable T code. • An M06 command has been specified when the Z machine coordi nate is positive. • The parameter for the current tool number (No. 7810) is set to 0. • An M06 command has been specified in canned cycle mode. • A reference position return command (G27 to G44) and M06 com mand have been specified in the same block. • An M06 command has been specified in tool compensation mode (G41 to G44). • An M06 command has been specified without performing reference position return after power–on or the release of emergency stop. • The machine lock signal or Z–axis ignore signal has been turned on during tool exchange. • A pry alarm has been detected during tool exchange. Refer to diagnosis No. 530 to determine the cause.

Number	Message	Contents
252	ATC SPINDLE ALARM (M series)	An excessive error arose during spindle positioning for ATC. For details, refer to diagnosis No. 531. (Only for DRILL–MATE)
253	G05 IS NOT AVAILABLE (M series)	Alarm details Binary input operation using high–speed remote buffer (G05) or high–speed cycle machining (G05) has been specified in advance control mode (G08P1). Execute G08P0; to cancel advance control mode, before executing these G05 commands.
5000	ILLEGAL COMMAND CODE (M series)	The specified code was incorrect in the high–precision contour control (HPCC) mode.
5003	ILLEGAL PARAMETER (HPCC) (M series)	There is an invalid parameter.
5004	HPCC NOT READY (M series)	High–precision contour control is not ready.
5006	TOO MANY WORD IN ONE BLOCK (M series)	The number of words specified in a block exceeded 26 in the HPCC mode.
5007	TOO LARGE DISTANCE (M series)	In the HPCC mode, the machine moved beyond the limit.
5009	PARAMETER ZERO (DRY RUN) (M series)	The maximum feedrate (parameter No. 1422) or the feedrate in dry run (parameter No. 1410) is 0 in the HPCC model.
5010	END OF RECORD	The end of record (%) was specified. I/O is incorrect. modify the program.
5011	PARAMETER ZERO(CUT MAX) (M series)	The maximum cutting feedrate (parameter No. 1422)is 0 in the HPCC mode.
5012	G05 P10000 ILLEGAL START UP (HPCC) (M series)	Function category: High–precision contour control Alarm details: G05 P10000 has been specified in a mode from which the system cannot enter HPCC mode.
5013	HPCC: CRC OFS REMAIN AT CANCEL (M series)	G05P0 has been specified in G41/G42 mode or with offset remaining.
5014	TRACE DATA NOT FOUND (M series)	Transfer cannot be performed because no trace data exists.
5015	 (M series)	The specified rotation axis does not exist for tool axis direction handle feed.
5016	ILLEGAL COMBINATION OF M CODE	M codes which belonged to the same group were specified in a block. Alternatively,an M code which must be specified without other M codes in the block was specified in a block with other M codes.
5018	POLYGON SPINDLE SPEED ERROR (T series)	Function category: Polygon turning Alarm details: In G51.2 mode, the speed of the spindle or polygon synchronous axis either exceeds the clamp value or is too small. The specified rotation speed ratio thus cannot be maintained.
5020	PARAMETER OF RESTART ERROR	An erroneous parameter was specified for restarting a program. A parameter for program restart is invalid.
5030	ILLEGAL COMMAND (G100) (T series)	The end command (G110) was specified before the registratioin start command (G101, G102, or G103) was specified for the B–axis.
5031	ILLEGAL COMMAND (G100, G102, G103) (T series)	While a registration start command (G101, G102, or G103) was being executed, another registration start command was specified for the B–axis.
5032	NEW PRG REGISTERED IN B–AXS MOVE (T series)	While the machine was moving about the B–axis, at attempt was made to register another move command.
5033	NO PROG SPACE IN MEMORY B–AXS (T series)	Commands for movement about the B–axis were not registered because of insufficient program memory.

Number	Message	Contents
5034	PLURAL COMMAND IN G110 (T series)	Multiple movements were specified with the G110 code for the B–axis.
5035	NO FEEDRATE COMMANDED B–AXS (T series)	A feedrate was not specified for cutting feed about the B–axis.
5036	ADDRESS R NOT DEFINED IN G81–G86 (T series)	Point R was not specified for the canned cycle for the B–axis.
5037	ADDRESS Q NOT DEFINED IN G83 (T series)	Depth of cut Q was not specified for the G83 code (peck drilling cycle). Alternatively, 0 was specified in Q for the B–axis.
5038	TOO MANY START M–CODE COMMAND (T series)	More than six M codes for starting movement about the B–axis were specified.
5039	START UNREGISTERED B–AXS PROG (T series)	An attempt was made to execute a program for the B–axis which had not been registered.
5040	CAN NOT COMMANDED B–AXS MOVE (T series)	The machine could not move about the B–axis because parameter No.8250 was incorrectly specified, or because the PMC axis system could not be used.
5041	CAN NOT COMMANDED G110 BLOCK (T series)	Blocks containing the G110 codes were successively specified in tool–tip radius compensation for the B–axis.
5043	TOO MANY G68 NESTING (M series)	Three–dimensional coordinate conversion G68 has been specified three or more times.
5044	G68 FORMAT ERROR (M series)	A G68 command block contains a format error. This alarm is issued in the following cases: 1. I, J, or K is missing from a G68 command block (missing coordi nate rotation option). 2. I, J, and K are 0 in a G68 command block. 3. R is missing from a G68 command block.
5046	ILLEGAL PARAMETER (ST.COMP)	The parameter settings for straightness compensation contain an error. Possible causes are as follows: 1. A parameter for a movement axis or compensation axis contains an axis number which is not used. 2. More than 128 pitch error compensation points exist between the negative and positive end points. 3. Compensation point numbers for straightness compensation are not assigned in the correct order. 4. No straightness compensation point exists between the pitch error compensation points at the negative and positive ends. 5. The compensation value for each compensation point is too large or too small.
5050	ILL–COMMAND IN CHOPPING MODE (M series)	A command for switching the major axis has been specified for circular threading. Alternatively, a command for setting the length of the major axis to 0 has been specified for circular threading.
5051	M–NET CODE ERROR	Abnormal character received (other than code used for transmission)
5052	M–NET ETX ERROR	Abnormal ETX code
5053	M–NET CONNECT ERROR	Connection time monitoring error (parameter No. 175)
5054	M–NET RECEIVE ERROR	Polling time monitoring error (parameter No. 176)
5055	M–NET PRT/FRT ERROR	Vertical parity or framing error
5057	M–NET BOARD SYSTEM DOWN	Transmission timeout error (parameter No. 177) ROM parity error CPU interrupt other than the above
5058	G35/G36 FORMAT ERROR (T series)	A command for switching the major axis has been specified for circular threading. Alternatively, a command for setting the length of the major axis to 0 has been specified for circular threading.
5059	RADIUS IS OUT OF RANGE (T series)	A radius exceeding nine digits has been specified for circular interpolation with the center of the arc specified with I, J, and K.

Number	Message	Contents
5063	IS NOT PRESET AFTER REF. (M series)	Function category: Workpiece thickness measurement Alarm details The position counter was not preset before the start of workpiece thickness measurement. This alarm is issued in the following cases: (1) An attempt has been made to start measurement without first establishing the origin. (2) An attempt has been made to start measurement without first presetting the position counter after manual return to the origin.
5064	DIFFERRENT AXIS UNIT (IS–B, IS–C) (M series)	Circular interpolation has been specified on a plane consisting of axes having different increment systems.
5065	DIFFERENT AXIS UNIT (PMC AXIS) (M series)	Axes having different increment systems have been specified in the same DI/DO group for PMC axis control. Modify the setting of parameter No. 8010.
5066	RESTART ILLEGAL SEQUENCE NUMBER (M series)	Sequence number 7xxx has been read during search for the next sequence number at program restart for the return/restart function.
5068	G31 P90 FORMAT ERROR (M series)	No movement axis or more than one movement axis has been specified.
5073	NO DECIMAL POINT	No decimal point has been specified for an address requiring a decimal point.
5074	ADDRESS DUPLICATION ERROR	The same address has been specified two or more times in a single block. Alternatively, two or more G codes in the same group have been specified in a single block.
5082	DATA SERVER ERROR	This alarm is detailed on the data server message screen.

Note
HPCC : High precision contour control

(2) Background edit alarm

Number	Message	Contents
???	BP/S alarm	BP/S alarm occurs in the same number as the P/S alarm that occurs in ordinary program edit. (070, 071, 072, 073, 074 085,086,087 etc.)
140	BP/S alarm	It was attempted to select or delete in the background a program being selected in the foreground. **(Note)** Use background editing correctly.

Note

Alarm in background edit is displayed in the key input line of the background edit screen instead of the ordinary alarm screen and is resettable by any of the MDI key operation.

(3) Absolute pulse coder (APC) alarm

Number	Message	Contents
300	nth–axis origin return	Manual reference position return is required for the nth–axis (n=1 – 8).
301	APC alarm: nth–axis communication	nth–axis (n=1 – 8) APC communication error. Failure in data transmission Possible causes include a faulty APC, cable, or servo interface module.
302	APC alarm: nth–axis over time	nth–axis (n=1 – 8) APC overtime error. Failure in data transmission. Possible causes include a faulty APC, cable, or servo interface module.
303	APC alarm: nth–axis framing	nth–axis (n=1 – 8) APC framing error. Failure in data transmission. Possible causes include a faulty APC, cable, or servo interface module.
304	APC alarm: nth–axis parity	nth–axis (n=1 – 8) APC parity error. Failure in data transmission. Possible causes include a faulty APC, cable, or servo interface module.
305	APC alarm: nth–axis pulse error	nth–axis (n=1 – 8) APC pulse error alarm. APC alarm.APC or cable may be faulty.
306	APC alarm: nth–axis battery voltage 0	nth–axis (n=1 – 8) APC battery voltage has decreased to a low level so that the data cannot be held. APC alarm. Battery or cable may be faulty.
307	APC alarm: nth–axis battery low 1	nth–axis (n=1 – 8) axis APC battery voltage reaches a level where the battery must be renewed. APC alarm. Replace the battery.
308	APC alarm: nth–axis battery low 2	nth–axis (n=1 – 8) APC battery voltage has reached a level where the battery must be renewed (including when power is OFF). APC alarm .Replace battery.
309	APC ALARM: n AXIS ZRN IMPOSSIBL	Return to the origin has been attempted without first rotating the motor one or more times. Before returning to the origin, rotate the motor one or more times then turn off the power.

(4) Serial pulse coder (SPC) alarms

When either of the following alarms is issued, a possible cause is a faulty serial pulse coder or cable.

Number	Message	Contents
350	SPC ALARM: n AXIS PULSE CODER	The n axis (axis 1–8) pulse coder has a fault. Refer to diagnosis display No. 202 and No. 204 for details.
351	SPC ALARM: n AXIS COMMUNICATION	n axis (axis 1–8) serial pulse coder communication error (data transmission fault) Refer to diagnosis display No. 203 for details.

- **The details of serial pulse coder alarm No.350**

	#7	#6	#5	#4	#3	#2	#1	#0
202		CSA	BLA	PHA	PCA	BZA	CKA	SPH

#6 (CSA) : Check sum alarm has occurred.
#5 (BLA) : Battery low alarm has occurred.
#4 (PHA) : Phase data trouble alarm has occurred.
#3 (PCA) : Speed count trouble alarm has occurred.
#2 (BZA) : Battery zero alarm has occurred.
#1 (CKA) : Clock alarm has occurred.
#0 (SPH) : Soft phase data trouble alarm has occurred.

- **The details of serial pulse coder alarm No.351**

	#7	#6	#5	#4	#3	#2	#1	#0
203	DTE	CRC	STB					

#7 (DTE) : Data error has occurred.
#6 (CRC) : CRC error has occurred.
#5 (STB) : Stop bit error has occurred.

(5) Servo alarms

Number	Message	Contents
400	SERVO ALARM: n–TH AXIS OVERLOAD	The n–th axis (axis 1–8) overload signal is on. Refer to diagnosis display No. 201 for details.
401	SERVO ALARM: n–TH AXIS VRDY OFF	The n–th axis (axis 1–8) servo amplifier READY signal (DRDY) went off. Refer to procedure of trouble shooting.
404	SERVO ALARM: n–TH AXIS VRDY ON	Even though the n–th axis (axis 1–8) READY signal (MCON) went off, the servo amplifier READY signal (DRDY) is still on. Or, when the power was turned on, DRDY went on even though MCON was off. Check that the servo interface module and servo amp are connected.
405	SERVO ALARM: (ZERO POINT RETURN FAULT)	Position control system fault. Due to an NC or servo system fault in the reference position return, there is the possibility that reference position return could not be executed correctly. Try again from the manual reference position return.
407	SERVO ALARM: EXCESS ERROR	The difference in synchronous axis position deviation exceeded the set value.
409	SERVO ALARM: n AXIS TORQUE ALM	Abnormal servo motor load has been detected. Alternatively, abnormal spindle motor load has been detected in Cs mode.
410	SERVO ALARM: n–TH AXIS – EXCESS ERROR	The position deviation value when the n–th axis (axis 1–8) stops is larger than the set value. Refer to procedure of trouble shooting.
411	SERVO ALARM: n–TH AXIS – EXCESS ERROR	The position deviation value when the n–th axis (axis 1–8) moves is larger than the set value. Refer to procedure of trouble shooting.
413	SERVO ALARM: n–th AXIS – LSI OVERFLOW	The contents of the error register for the n–th axis (axis 1–8) exceeded $\pm 2^{31}$ power. This error usually occurs as the result of an improperly set parameters.
414	SERVO ALARM: n–TH AXIS – DETECTION RELATED ERROR	N–th axis (axis 1–8) digital servo system fault. Refer to diagnosis display No. 200 and No.204 for details.
415	SERVO ALARM: n–TH AXIS – EXCESS SHIFT	A speed higher than 511875 units/s was attempted to be set in the n–th axis (axis 1–8). This error occurs as the result of improperly set CMR.
416	SERVO ALARM: n–TH AXIS – DISCONNECTION	Position detection system fault in the n–th axis (axis 1–8) pulse coder (disconnection alarm). Refer to diagnosis display No. 201 for details.
417	SERVO ALARM: n–TH AXIS – PARAMETER INCORRECT	This alarm occurs when the n–th axis (axis 1–8) is in one of the conditions listed below. (Digital servo system alarm) 1) The value set in Parameter No. 2020 (motor form) is out of the specified limit. 2) A proper value (111 or –111) is not set in parameter No.2022 (motor revolution direction). 3) Illegal data (a value below 0, etc.) was set in parameter No. 2023 (number of speed feedback pulses per motor revolution). 4) Illegal data (a value below 0, etc.) was set in parameter No. 2024 (number of position feedback pulses per motor revolution). 5) Parameters No. 2084 and No. 2085 (flexible field gear rate) have not been set. 6) A value outside the limit of {1 to the number of control axes} or a non–continuous value (Parameter 1023 (servo axis number) con tains a value out of the range from 1 to the number of axes, or an isolated value (for example, 4 not prceded by 3).was set in parame ter No. 1023 (servo axisnumber).

Number	Message	Contents
420	SERVO ALARM: n AXIS SYNC TORQUE (M series)	During simple synchronous control, the difference between the torque commands for the master and slave axes exceeded the value set in parameter No. 2031.
421	SERVO ALARM: n AXIS EXCESS ER (D)	The difference between the errors in the semi–closed loop and closed loop has become excessive during dual position feedback. Check the values of the dual position conversion coefficients in parameters No. 2078 and 2079.

- **Details of servo alarm No.414**

The details of servo alarm No. 414 are displayed in the diagnosis display (No. 200 and No.204) as shown below.

	#7	#6	#5	#4	#3	#2	#1	#0
200	OVL	LV	OVC	HCA	HVA	DCA	FBA	OFA

#7 (OVL) : An overload alarm is being generated.
#6 (LV) : A low voltage alarm is being generated in servo amp.
#5 (OVC) : A overcurrent alarm is being generated inside of digital servo.
#4 (HCA) : An abnormal current alarm is being generated in servo amp.
#3 (HVA) : An overvoltage alarm is being generated in servo amp.
#2 (DCA) : A regenerative discharge circuit alarm is being generated in servo amp.
#1 (FBA) : A disconnection alarm is being generated.
#0 (OFA) : An overflow alarm is being generated inside of digital servo.

	#7	#6	#5	#4	#3	#2	#1	#0
204		OFS	MCC	LDA	PMS			

#6 (OFS) : A current conversion error has occured in the digital servo.
#5 (MCC) : A magnetic contactor contact in the servo amplifier has welded.
#4 (LDA) : The LED indicates that serial pulse coder C is defective
#3 (PMS) : A feedback pulse error has occured because the feedback cable is defective.

- **Details of servo alarms No. 400 and No.416**

The details of servo alarms No. 400 and No. 416 are displayed in the diagnosis display (No. 201) as shown below.

	#7	#6	#5	#4	#3	#2	#1	#0
201	ALD			EXP				

When OVL equal 1 in diagnostic data No.200 (servo alarm No. 400 is being generated):

#7 (ALD) 0 : Motor overheating
1 : Amplifier overheating

When FBAL equal 1 in diagnostic data No.200 (servo alarm No. 416 is being generated):

ALD	EXP	Alarm details
1	0	Built–in pulse coder disconnection (hardware)
1	1	Separately installed pulse coder disconnection (hardware)
0	0	Pulse coder is not connected due to software.

(6) Over travel alarms

Number	Message	Contents
500	OVER TRAVEL : +n	Exceeded the n–th axis (axis 1–8) + side stored stroke limit I. (Parameter No.1320 or 1326 **Notes**)
501	OVER TRAVEL : –n	Exceeded the n–th axis (axis 1–8) – side stored stroke limit I. (Parameter No.1321 or 1327 **Notes**)
502	OVER TRAVEL : +n	Exceeded the n–th axis (axis 1–8) + side stored stroke limit II. (Parameter No.1322)
503	OVER TRAVEL : –n	Exceeded the n–th axis (axis 1–8) – side stored stroke limit II. (Parameter No.1323)
504	OVER TRAVEL : +n	Exceeded the n–th axis (axis 1–8) + side stored stroke limit III. (Parameter No.1324)
505	OVER TRAVEL : –n	Exceeded the n–th axis (axis 1–8) – side stored stroke limit III. (Parameter No.1325)
506	OVER TRAVEL : +n	Exceeded the n–th axis (axis 1–8) + side hardware OT.
507	OVER TRAVEL : –n	Exceeded the n–th axis (axis 1–8) – side hardware OT.
508	INTERFERENCE: +n (T series (two–path control))	A tool moving in the positive direction along the n axis has fouled another tool post.
509	INTERFERENCE: –n (T series (two–path control))	A tool moving in the negative direction along the n axis has fouled another tool post.
510	OVER TRAVEL: +n	Alarm for stroke check prior to movement. The end point specified in a block falls within the forbidden area defined with the stroke limit in the positive direction along the N axis. Correct the program.
511	OVER TRAVEL: –n	Alarm for stroke check prior to movement. The end point specified in a block falls within the forbidden area defined with the stroke limit in the negative direction along the N axis. Correct the program.

Note

Parameters 1326 and 1327 are effective when EXLM(stroke limit switch signal) is on.

(7) Overheat alarms

Number	Message	Contents
700	OVERHEAT: CONTROL UNIT	Control unit overheat Check that the fan motor operates normally, and clean the air filter.
701	OVERHEAT: FAN MOTOR	The fan motor on the top of the cabinet for the contorl unit is overheated. Check the operation of the fan motor and replace the motor if necessary.
704	OVERHEAT: SPINDLE	Spindle overheat in the spindle fluctuation detection (1)If the cutting load is heavy, relieve the cutting condition. (2)Check whether the cutting tool is share. (3)Another possible cause is a faulty spindle amp.

(8) Rigid tapping alarms

Number	Message	Contents
740	RIGID TAP ALARM: EXCESS ERROR	The positional deviation of the stopped spindle has exceeded the set value during rigid tapping.
741	RIGID TAP ALARM: EXCESS ERROR	The positional deviation of the moving spindle has exceeded the set value during rigid tapping.
742	RIGID TAP ALARM: LSI OVERFLOW	An LSI overflow has occurred for the spindle during rigid tapping.

(9) Serial spindle alarms

Number	Message	Contents
749	S–SPINDLE LSI ERROR	It is serial communication error while system is executing after power supply on. Following reasons can be considered. 1) Optical cable connection is fault or cable is not connected or cable is cut. 2) MAIN CPU board or option 2 board is fault. 3) Spindle amp. printed board is fault. If this alarm occurs when CNC power supply is turned on or when this alarm can not be cleared even if CNC is reset, turn off the power supply also turn off the power supply in spindle side.
750	SPINDLE SERIAL LINK START FAULT	This alarm is generated when the spindle control unit is not ready for starting correctly when the power is turned on in the system with the serial spindle. The four reasons can be considered as follows: 1) An improperly connected optic cable, or the spindle control unit's power is OFF. 2) When the NC power was turned on under alarm conditions other than SU–01 or AL–24 which are shown on the LED display of the spindle control unit. In this case, turn the spindle amplifier power off once and perform startup again. 3) Other reasons (improper combination of hardware) This alarm does not occur after the system including the spindle control unit is activated. 4) The second spindle (when SP2, bit 4 of parameter No. 3701, is 1) is in one of the above conditions 1) to 3). See diagnostic display No. 409 for details.
751	FIRST SPINDLE ALARM DETECTION (AL–XX)	This alarm indicates in the NC that an alarm is generated in the spindle unit of the system with the serial spindle. The alarm is displayed in form AL–XX (XX is a number). Refer to **2.3** or **2.4 Alarms displayed on spindle servo unit** .The alarm number XX is the number indicated on the spindle amplifier. The CNC holds this number and displays on the screen.
752	FIRST SPINDLE MODE CHANGE FAULT	This alarm is generated if the system does not properly terminate a mode change. The modes include the Cs contouring, spindle positioning, rigid tapping, and spindle control modes. The alarm is activated if the spindle control unit does not respond correctly to the mode change command issued by the NC.
754	SPINDLE–1 ABNORMAL TORQUE ALM	Abnormal first spindle motor load has been detected.
761	SECOND SPINDLE ALARM DETECTION (AL–XX)	Refer to alarm No. 751. (For 2nd axis)
762	SECOND SPINDLE MODE CHANGE FAULT	Refer to alarm No. 752.(For 2nd axis)

Number	Message	Contents
764	SPINDLE–2 ABNORMAL TORQUE ALM	Same as alarm No. 754 (for the second spindle)
771	SPINDLE–3 ALARM DETECT (AL–XX)	Same as alarm No. 751 (for the third spindle)
772	SPINDLE–3 MODE CHANGE EROR	Same as alarm No. 752 (for the third spindle)
774	SPINDLE–3 ABNORMAL TORQUE ALM	Same as alarm No. 754 (for the third spindle)

- **The details of spindle alarm No.750**

The details of spindle alarm No. 750 are displayed in the diagnosis display (No. 409) as shown below.

	#7	#6	#5	#4	#3	#2	#1	#0
409					SPE	S2E	S1E	SHE

#3 (SPE) 0 : In the spindle serial control, the serial spindle parameters fulfill the spindle unit startup conditions.

1 : In the spindle serial control, the serial spindle parameters do not fulfill the spindle unit startup conditions.

#2 (S2E) 0 : The second spindle is normal during the spindle serial control startup.

1 : The second spindle was detected to have a fault during the spindle serial control startup.

#1 (S1E) 0 : The first spindle is normal during the spindle serial control startup.

1 : The first spindle was detected to have a fault during the spindle axis serial control startup.

#0 (SHE) 0 : The serial communications module in the CNC is normal.

1 : The serial communications module in the CNC was detected to have a fault.

(10) System alarms (These alarms cannot be reset with reset key.)

Number	Message	Contents
900	ROM PARITY	ROM parity error (CNC/OMM/Servo) Replace the number of ROM.
910	RAM PARITY : (4N)	RAM parity error in the tape memory RAM module. Clear the memory or replace the module. After this operation, reset all data including the parameters.
911	RAM PARITY: (4N+1)	RAM parity error in the tape memory RAM module. Clear the memory or replace the module. After this operation, reset all data including the parameters.
912	RAM PARITY: (4N+2)	RAM parity error in the tape memory RAM module. Clear the memory or replace the module. After this operation, reset all data including the parameters.
913	RAM PARITY : (4N+3)	RAM parity error in the tape memory RAM module. Clear the memory or replace the module. After this operation, reset all data including the parameters.
914	SRAM PARITY (2N)	A RAM parity error occurred in RAM for part program storage or additional SRAM. Clear the memory, or replace the main CPU board or additional SRAM. Then, set all data, including parameters, again.
915	SRAM PARITY (2+1)	
916	DRAM PARITY	RAM parity error in DRAM module. Replace the DRAM module.
920	SERVO ALARM (1/2/3/4 AXIS)	Servo alarm (1st to 4th axis). A watchdog alarm or a RAM parity error in the servo module occurred. Replace the servo control module on the main CPU board.
922	SERVO ALARM (5/6/7/8 AXIS)	Servo alarm (5th to 8th axis). A watchdog alarm or a RAM parity error in the servo module occurred. Replace the servo control module on the option 2 board.
924	SERVO MODULE SETTING ERROR	The digital servo module is not installed. Check that the servo control module or servo interface module on the main CPU or option 2 board is mounted securely.
926	SERVO ALARM (1/2/3/4/5/6 AXIS)	Servo alarm (1st to 6th axis). A watch dog alarm was issued, or a RAM parity error occurred in the servo module. Replace the servo control module on the main CPU board.
930	CPU INTERRUPUT	CPU error (abnormal interrupt) The main CPU board is faulty.
950	PMC SYSTEM ALARM	Fault occurred in the PMC.The PMC control module on the main CPU board or option 3 board may be faulty.
951	PMC–RC WATCH DOG ALARM	Fault occurred in the PMC–RC (watchdog alarm).Option 3 board may be faulty.
970	NMI OCCURRED IN PMP	RAM parity error or NMI occurred in the PMC–RB module. The main CPU board is faulty.
971	NMI OCCURRED IN SLC	An alarm condition occurred in the interface with an I/O unit. For PMC–RA1, PMC–RA2, and PMC–RB, check that the PMC control module on the main CPU board is conneted to the I/O unit securely. For PMC–RC, check that the PMC control module on the option 3 board is connected to the I/O unit is supplied with power and that the interface module is intact.
972	NMI OCCURRED IN OTHER MODULE	NMI occurred in a board other than the main CPU board. Option 1 to 3 may be faulty.
973	NON MASK INTERRUPT	NMI occurred for an unknown reason.
974	F–BUS ERROR	FANUC BUS is error. MAIN CPU board and option 1 to 3 boards may be faulty.
975	BUS ERROR (MAIN)	MAIN CPU board is BUS error. MAIN CPU board may be faulty.

B.2 LIST OF ALARMS (PMC)

(1) Alarm messages (PMC)

Message	Contents and solution
ALARM NOTHING	Normal status
ER00 PROGRAM DATA ERROR(ROM)	The sequence program in the ROM is not written correctly. (solution) Please exchange ROM for the sequence program.
ER01 PROGRAM DATA ERROR(RAM)	The sequence program in the debugging RAM is defective. (solution) Please clear the debugging RAM and input LADDER again. The debugging RAM is not installed though the RAM is selected. (solution) Please install the debugging RAM or install ROM for sequence program and select ROM with K17#3=0.
ER02 PROGRAM SIZE OVER	The size of sequence program exceeds the maximum size of LADDER(PMC–RC only). (solution) Please change MAX LADDER AREA SIZE at the SYSPRM screen and restart the system.
ER03 PROGRAM SIZE ERROR(OPTION)	The size of sequence program exceeds the option specification size. (solution) Please increase the option specification size. Or, reduce the size of sequence program.
ER04 PMC TYPE UNMATCH	The PMC model setting of the sequence program is not corresponding to an actual model. (solution) Please change the PMC model setting by the offline programmer.
ER05 PMC MODULE TYPE ERROR	The module type of the PMC engine is not correct. (solution) Please exchange the module of PMC engine for a correct one.
ER06 PROGRAM MODULE NOTHING	Both ROM for sequence program and the debugging RAM do not exist (PMC–RC only)
ER07 NO OPTION (LADDER STEP)	There is no step number option of LADDER.
ER 16 RAM CHECK ERROR (PROGRAM RAM)	The debugging RAM cannot be read/written normally. (solution) Please exchange the debugging RAM.
ER17 PROGRAM PARITY	The parity error occurred on ROM for sequence program or the debugging RAM. (solution) ROM: The deterioration of ROM may be deteriorated Please exchange ROM for the sequence program RAM: Please edit the sequence program once on PMC Still the error occurs, exchange the debugging RAM.
ER18 PROGRAM DATA ERROR BY I/O	Transferring the sequence program from offline programmer was interrupted by the power off etc. (solution) Please clear the sequence program and transfer the sequence program again.
ER19 LADDER DATA ERROR	Editing the LADDER was interrupted by the power off or by the switch to the CNC screen by the function key etc. (solution) Please edit LADDER once on PMC. Or, please input LADDER again.

Message	Contents and solution
ER20 SYMBOL/COMMENT DATA ERROR	Editing the symbol and comment was interrupted by the power off or by the switch to the CNC screen by the function key etc. (solution) Please edit symbol and comment once on PMC. Or, please input symbol and comment again.
ER21 MESSAGE DATA ERROR	Editing the message data was interrupted by the power off or the switch to the CNC screen by the function key etc. (solution) Please edit message data once on PMC. Or, please input message data again.
ER22 PROGRAM NOTHING	There is no sequence program
ER23 PLEASE TURN OFF POWER	There is a change in setting LADDER MAX AREA SIZE etc. (solution) Please restart the system to make the change effective.
ER32 NO I/O DEVICE	Any DI/DO unit of I/O Unit or the connection unit etc. is not connected. When built–in I/O card is connected, this message is not displayed. (solution) When built–in I/O card is used: Please confirm whether the built–in I/O card is certainly connected with. When I/O Link is used: Please confirm whether the DI/DO units turning on. Or please confirm the connection of the cable.
ER33 SLC ERROR	The LSI for I/O Link is defective. (solution) Please exchange the module of PMC engine.
ER34 SLC ERROR(xx)	The communication with the DI/DO units of the xx group failed. (solution) Please confirm the connection of the cable connected to the DI/DO units of the xx group. Please confirm whether the DI/DO units turned on earlier than CNC and PMC. Or, please exchange the module of PMC engine on the DI/DO units of the xx group
ER35 TOO MUCH OUTPUT DATA IN GROUP(xx)	The number of the output data in the xx group exceeded the max. The data, which exceed 32 bytes, become ineffective. (solution) Please refer to the following for the number of the data for each group. “FANUC I/O Unit–MODEL A connecting and maintenance manual” (B–61813E) “FANUC I/O Unit–MODEL B connecting manual”(B–62163E)
ER36 TOO MUCH INPUT DATA IN GROUP(xx)	The number of the input data in the xx group exceeded the max. The data, which exceed 32 bytes, become ineffective. (solution) Please refer to the following for the number of the data for each group. “FANUC I/O Unit–MODEL A connecting and maintenance manual” (B–61813E) “FANUC I/O Unit–MODEL B connecting manual”(B–62163E)
ER38 MAX SETTING OUTPUT DATA OVER(xx)	The assignment data for a group exceeds 128 bytes. (The assignment data of output side of xx group or later become ineffective.) (solution) Please reduce the assignment data to 128 bytes or less for the number of the output data of each group.
ER39 MAX SETTING INPUT DATA OVER(xx)	The assignment data for a group exceeds 128 bytes. (The assignment data of input side of xx group or later become infective.) (Solution) Please reduce the assignment data to 128 bytes or less for the number of the input data of each goup.
WN01 LADDER MAX SIZE ER-ROR	The MAX LADDER AREA SIZE in the system parameter is illegal. (solution) Set the correct value to MAX LADDER AREA SIZE and restart the system.

*When ER00 to ER23 occur, sequence program is not available.

Message	Contents and solution
WN02 OPERATE PANEL ADDRESS ERROR	The address setting data of the operator's panel for FS–0 is illegal. (solution) Please correct the address setting data.
WN03 ABORT NC–WINDOW/ EXIN	LADDER was stopped while CNC and PMC were communicating. The functional instruction WINDR, WINDW, EXIN, DISPB, and etc. may not work normally. (solution) When restarting the system, this alarm will be released. Execute the sequence program(Press RUN key) after confirming whether there is a problem in LADDER or not.
WN04 UNAVAIL EDIT MODULE	The LADDER editing module cannot be recognized.(PMC–RAx/RBxx=1 to 3) (solution) Please confirm the slot position installed. Please confirm the installed module.
WN06 TASK STOPPED BY DEBUG FUNC	Some user tasks are stopped by break point of the debugging function.
WN07 LADDER SP ERROR (STACK)	When functional instruction CALL(SUB65) or CALLU(SUB66) was executed, the stack of the LADDER overflowed. (solution) Please reduce the nesting of the subprogram to 8 or less.
WN17 NO OPTION (LANGUAGE)	There is no C language option.
WN18 ORIGIN ADDRESS ERROR	The LANGUAGE ORIGIN address of the system parameter is wrong (solution) Please set the address of symbol RC_CTLB_INIT in the map file to the LANGUAGE ORIGIN of the system parameter.
WN19 GDT ERROR(BASE,LIMIT)	The value of BASE, LIMIT or ENTRY of user defined GDT is illegal. (solution) Please correct the address in link control statement and build file.
WN20 COMMON MEM. COUNT OVER	The number of common memories exceeds 8. (solution) Please reduce the number of common memories to 8 or less. It is necessary to correct a link control statement,build file and the source file for the common memory.
WN21 COMMON MEM. ENTRY ERROR	GDT ENTRY of the common memory is out of range. (solution) Please correct the address of GDT ENTRY of the common memory in the link control statement.
WN22 LADDER 3 PRIORITY ERROR	The priority of LADDER LEVEL 3 is out of range. (solution) Please correct the value of LADDER LEVEL 3 in the link control statement within the range of 0 or 10–99 or –1.
WN23 TASK COUNT OVER	The number of user tasks exceeds 16. (solution) Please confirm TASK COUNT in the link control statement. When the number of tasks is changed, it is necessary to correct the link control statement, build file and the composition of the files to be linked.
WN24 TASK ENTRY ADDR ERROR	The selector of the entry address to the user task is out of range. (solution) Please correct the table of GDT in build file to the value within 32(20H)–95(5FH).
WN25 DATA SEG ENTRY ERROR	The entry address of the data segment is out of range. (solution) Please correct DATA SEGMENT GDT ENTRY in the link control statement and the table of GDT in build file within 32(20H)–95(5FH).
WN26 USER TASK PRIORITY ERROR	The priority of the user task is out of range. (solution) Please correct the TASK LEVEL in link control statement within the range of 10–99 or –1. Note: Only one task can have TASK LEVEL –1 (including LADDER LEVEL 3).

Message	Contents and solution
WN27 CODE SEG TYPE ERROR	The code segment type is illegal. The code segment of RENAMESEG in the binding control file is wrong. (solution) Please correct the entry of the code segment in the link control statement to correspond to the entry in the build file.
WN28 DATA SEG TYPE ERROR	The data segment type is illegal. The data segment of RENAMESEG in the binding control file is wrong. (solution) Please correct the entry of the code segment in the link control statement to correspond to the entry in the build file.
WN29 COMMON MEM SEG TYPE ERROR	The segment type of common memory is illegal. The segment of RENAMESEG in the building control file of the common memory is wrong. (solution) Please correct the entry of common memory in the link control statement to correspond to the entry in the build file.
WN30 IMPOSSIBLE ALLOCATE MEM.	The memories for the data and stack etc. cannot be allocated. (solution) Please confirm whether the value of code segment in build file and USER GDT ADDRESS in link control statement is correct or not. Or please reduce the value of MAX LADDER AREA SIZE of the system parameter and the size of the stack in link control statement at the least
WN31 IMPOSSIBLE EXECUTE LIBRARY	The library function cannot be executed. (solution) Please confirm the object model of the library. Or, system ROM of PMC must be replaced with one of later version.
WN32 LNK CONTROL DATA ERROR	Link control statement data is illegal. (solution) Please confirm whether the address of symbol RC_ CTLB_INIT in map file is set to LANGUAGE ORIGIN of the system parameter. Or, please make the link control statement again.
PC1nn CPU INTERPT xxxx yyyyyy STATUS LED ☆★	A CPU error (abnormal interrupt) occurred. nn : CPU exception handling code It is an exception code of i80386. For details, please refer to the manual of the CPU. 00 Division error such as a divisor is 0 in division instruction. 12 Stack exception such as violations of limit of stack segment. 13 General protection exception such as segment limit over. xxxx : Segment selector where system error occurred. The selector of 0103–02FB is used by C language. yyyyyy : Offset address where system error occurred. Solution) When C language is not used or when the cause is not found even if it is checked C language, consult it.
PC130 RAM PARITY aa xxxx yyyyyy STATUS LED □★	The parity error occurred on the debugging RAM of PMC. aa : RAM PARITY ERROR information. xxxx : Segment selector where system error occurred. yyyyyy : Offset address where system error occurred
PC140 NMI BOC bb xxxx yyyyyy STATUS LED □★	The RAM parity error or NMI(Non Maskable Interrupt) generated in module of PMC engine. bb : RAM PARITY ERROR information. 1, 2, 4, 8 Parity error occurred on basic DRAM. 14,18 Parity error occurred on option DRAM. 20,60,A0,E0 Parity error occurred on SRAM. xxxx : Segment selector where system error occurred. yyyyyy : Offset address where system error occurred.

Message	Contents and solution
PC150 NMI SLC aa cc STATUS LED ■★	The communication error occurred in the I/O Link. aa, cc : I/O Link error information. **Note 2)** This error may occur by the following causes. 1. When I/O Unit–MODEL A is used, base1, 2 or 3 is not connected though allocated. 2. The connection of cable is insufficient. 3. Defects of cable. 4. Defects of DI/DO units (I/O unit, Power Mate etc.) 5. Defects of PMC board (printed circuit board on host side where I/O Link cable is connected.) (solution) Investigate the cause of error. 1. Please confirm the allocation data (by ”EDIT”→”MODULE” screen) and compare with the actual connection. 2. Please confirm whether the cable is correctly connected.If you cannot find the cause with the ways above, it may be the defect of hardware. Please investigate a defective place by the following methods. 3. Please confirm the specification of the cable referring to”FANUC I/O Unit–MODEL A CONNECTION MAINTENANCE MANUAL (B–61813E)” or ”FANUC I/O Unit–MODEL B CONNECTION MANUAL (B–62163E)”. 4. Exchange the interface module of I/O Unit, the cable and the PMC board, etc. one by one and, confirm whether this error occurs again.The communication may fail by the noise etc. when this error still occurs after replacing all DI/DO units. Please investigate the cause of noise.
PC160 F–BUS ERROR xxxx yyyyyy STATUS LED ★□	The BUS error (access to disabled address) occurred. xxxx : Segment selector where system error occurred. yyyyyy : Offset address where system error occurred
PC199 ROM PARITY eeeeeeee STATUS LED ★☆	The parity error occur in PMC system ROM. eeeeeeee : ROM parity error information.

STATUS LED (green) are LED1, LED2 on PMC–RC. CAP–II is LED3 and LED4.
□ : Off■ : On☆★ : Blinking

Notes
1 The system error on PMC–RA1, RA2, RA3, RB,RB2 and RB3 is displayed as a system error on the CNC side. (Refer to the “FANUC Series 16/18–MA Operator’s Manual(B–61874E)” or “FANUC Series 16/18–TA Operator’s Manual(B–61804E)”.)
2 Error information is needed to investigate on FANUC, please take notes of it.

(2) Alarm messages (For EDIT 1)

Message	Contents and solution
ADDRESS BIT NOTHING	The address of the relay/coil is not set.
FUNCTION NOT FOUND	There is no functional instruction of the input number.
COM FUNCTION MISSING	The funcitonal instruction COM (SUB29) is not correctly dealt with. Correspondence of COM and COME (SUB29) is incorrect. Or, the number of coil controlled by COM is specified by the model which the number cannot be specified.
EDIT BUFFER OVER	There in no empty area of the buffer for the editing. (solution) Please reduce NET under editing.
END FUNCTION MISSING	Functional instruction END1,END2,END3 and END do not exist. Or, there are error net in END1,END2,END3,END. Or, order of END1,END2,END3, and END is not correct.

Message	Contents and solution
ERROR NET FOUND	There is an error net.
ILLEGAL FUNCTION NO.	The wrong number of the functional instruction is searched.
FUNCTION LINE ILLEGAL	The functional instruction is not correctly connected.
HORIZONTAL LINE ILLEGAL	The horizontal line of the net is not connected.
ILLEGAL NET CLEARED	Because the power had been turn off while editing LADDER, some net under editing was cleared.
ILLEGAL OPERATION	Operation is not correct. The value is not specified and only INPUT key was pushed. The address data is not correctly inputted. Because the space to display the instruction on screen is not enough, the functional instruction cannot be made.
SYMBOL UNDEFINED	The symbol which was inputted is not defined.
INPUT INVALID	There is an incorrect input data. Non–numerical value was inputted with COPY, INSLIN,C–UP,C–DOWN etc. The input address was specified for write coil. An illegal character was specified for the data table.
NET TOO LARGE	The input net is larger than the editing buffer. (solution) Please reduce the net under editing.
JUMP FUNCTION MISSING	The functional instruction JMP(SUB10) is not correctly dealt with. Correspondence of JMP and JMPE(SUB30) is incorrect. The number of coil to jump is specified by the model which the number of coil cannot specified. (It is possible to specify the coil number only on PMC–RB/RC.)
LADDER BROKEN	LADDER is broken.
LADDER ILLEGAL	There is an incorrect LADDER.
IMPOSSIBLE WRITE	You try to edit sequence program on the ROM.
OBJECT BUFFER OVER	The sequence program area was filled. (solution) Please reduce the LADDER.
PARAMETER NOTHING	There is no parameter of the functional instruction.
PLEASE COMPLETE NET	The error net was found in LADDER. (solution) After correcting the error net, please continue operating.
PLEASE KEY IN SUB NO.	Please input the number of the functional instruction. (solution) If you do not input the functional instruction, please push soft key ”FUNC” again.
PROGRAM MODULE NOTHING	You tried to edit though there was neither RAM for debugging nor ROM for sequence program.
RELAY COIL FORBIT	There is an unnecessary relay or coil.
RELAY OR COIL NOTHING	The relay or the coil does not suffice.
PLEASE CLEAR ALL	It is impossible to recover the sequence program. (solution) Please clear the all data.
SYMBOL DATA DUPLICATE	The same symbol name is defined in other place.
COMMENT DATA OVERFLOW	The comment data area was filled. (solution) Please reduce the number of the commnet.

Message	Contents and solution
SYMBOL DATA OVERFLOW	The symbol data area was filled. (solution) Please reduce the number of the symbol.
VERTICAL LINE ILLEGAL	There is an incorrect vertical line of the net.
MESSAGE DATA OVERFLOW	The message data area was filled. (solution) Please reduce the number of the message.
1ST LEVEL EXECUTE TIME OVER	The 1st level of LADDER is too large to complete execution in time. (solution) Please reduce the 1st level of LADDER.

(3) Alarm messages (For I/O)

Message	Contents and solution
I/O OPEN ERROR nn	An error occurs when the reader/puncher interface was started. nn= –1 Because the interface is used with NC etc., the interface is not able to be opened by PMC side. (solution) After other functions finishes using the line, please execute again. 6 There is no option for the interface. 20 The interface cannot be opened. (solution) Please confirm the connection of the cable. Please confirm setting of the baud rate etc.
I/O WRITE ERROR nn	An output error occurred in the reader/puncher interface. nn= 20 The state of the interface is not correct. (solution) Please confirm the connection of the cable. Please confirm setting the baud rate etc. 22 Opponent side is not ready to receive. (solution) Please confirm the power supply on the opponent side. Or, please initialize the interface.
I/O READ ERROR nn	An input error occurred in the reader/puncher interface. nn= 20 The state of the interface is not correct. (solution) Please confirm the connection of the cable. Please confirm setting the baud rate etc. 21 The data is not sent from the opponent side. (solution) Please confirm the power supply on the opponent side. Please initialize the opponent side.
I/O LIST ERROR nn	An error occurred in directory read processing from FD Cassette. nn= 20 The state of the interface is not correct. (solution) Please confirm the connection of the cable. Please confirm setting of the baud rate etc.
COMPARE ERR xxxxxx=aa:bb CONT? (Y/N)	A compare error occurred. xxxxxx : The Address where the compare error occurred. aa : The data on PMC side. bb : The data on device side Enter'Y' to continue processing.
ADDRESS IS OUT OF RANGE (xxxxxx)	The data transferred to the address out of the PMC debugging RAM area. xxxxxx : Transferred address. (solution) Please confirm the address of the transferring data. LADDER : Please confirm the model setting. C language : Please confirm setting the address in the link control statement and build file.
ROM WRITER ERROR nnnnnn	An error occurred in the ROM writer.

B.3 SPINDLE ALARMS (SERIAL SPINDLE)

Note
Er–xx is not displayed on CRT.

Message	Contents	Countermeasure
Er–01	*Although ESP (there are 2 types : connection signal and PMC→CNC) and MRDY (machine ready signal) are not input, SFR/SRV is input. However, regarding MRDY, pay attention to the setting of use/not use spindle parameter MRDY.	*Confirm the sequence of ESP and MRDY.
Er–02	If spindle motor is not integrated with spindle in system with high–resolution magnetic pulse coder, speed detector of spindle motor is set to 128 p/rev. Attempt to excite motor fails if value other than 128 p/rev is set.	Set the spindle motor speed detector parameter to 128 p/rev.
Er–03	Parameter for high–resolution magnetic pulse coder is not set, but Cs contouring control command is entered. In this case, motor is not excited.	Check parameter setting for high–resolution magnetic pulse coder.
Er–04	Although parameter setting for using position coder was not performed, commands for servo mode and synchronous control are input. In this case, the motor will not be excited.	Confirm the parameter setting of the position coder.
Er–05	Although option parameter for orientation is not set, the orientation command (ORCM) is input.	Confirm the parameter setting of orientation.
Er–06	Although option parameter for output switchover is not set, LOW winding is selected.	Confirm the parameter setting for output switching and power line status signal.
Er–07	Although Cs contouring control command was entered, SFR/SRV is not entered.	Confirm the sequence.
Er–08	Although servo mode control command was input, SFR/SRV is not input.	Confirm the sequence.
Er–09	Although synchronous control command was input, SFR/SRV is not input.	Confirm the sequence.
Er–10	Cs control command was entered, but another mode (servo mode, synchronous control, orientation) is specified.	Never set another mode when Cs contouring control command is being processed. Before changing to another mode, clear Cs contouring contorl command.
Er–11	Servo mode command was entered, but another mode (Cs contouring control, synchronous control, orientation)is specified.	Do not command other modes during servo mode command. When moving to other modes, perform after releasing the servo mode command.
Er–12	Synchronous control command was entered, but another mode (Cs contouringt control, servo mode, orientation) is specified.	Do not command other modes during synchronous control command. When moving to other modes, perform after releasing the synchronous control command.
Er–13	Orientation command was entered, but another mode (Cs contouring control, servo mode, synchronous control) is specified.	Do not command other modes during orientation command. When moving to other modes, perform after releasing the orientation command.
Er–14	SFR/SRV are simultaneously commanded.	Command one or the other.
Er–15	Cs contouring control command is entered when differential speed control function is enabled by parameter setting (No.6500#5=1).	Check parameter setting and control input signal.

Message	Contents	Countermeasure
Er–16	Differential mode command (DEFMDA) is entered when differential speed function is disabled by parameter setting (No.6500#5=1).	Check parameter setting and control input signal.
Er–17	Parameter setting (No.6511#0,1,2) for speed detector is incorrect. (Specified speed detector is not present.)	Check parameter setting.
Er–18	Spindle orientation command of position coder type is entered when use of position coder signal is disabled by parameter setting(No.6501#2=0).	Check parameter setting and control input signal.
Er–19	Although the command for orienting the magnetic sensor system was entered, another mode was issued.	Do not issue another mode while the orientation command is executed. Before issuing another mode, cancel the orientation command.
Er–20	Both the slave mode and the high–resolution magnetic pulse coder were enabled.	These two settings are incompatible. Check the parameter settings.
Er–21	The slave mode command (SLV=1) was entered under position control (servo mode, orientation,etc.).	Enter the slave mode command in the normal operation mode.
Er–22	The position control command (servo mode, orientation,etc.) was entered in the slave operation mode (SLV=1).	Enter the position control command in the normal operation mode.
Er–23	A slave mode command was entered when the slave mode is disabled.	Enable the slave mode.
Er–24	To perform continuous indexing in the mode for orienting the position coder system, incremental operation(INCMD=1) was first performed, then the absolute position command (INCMD=0) was entered.	Check the control input signal (INCMD). To execute the absolute position command continuously, be sure to perform orientation with the absolute position command first.
Contact signal of *ESP	Between ESP1 and ESP2 of spindle control printed circuit board	Contact is open : emergency stop Contact is closed : general operation

Alarms (Serial spindle)

Alarm No.	Meaning	Description	Remedy
”A” display	Program ROM abnormality (not installed)	Detects that control program is not started (due to program ROM not installed, etc.)	Install normal program ROM
AL–01	Motor overheat	Detects motor speed exceeding specified speed excessively.	Check load status. Cool motor then reset alarm.
AL–02	Excessive speed deviation	Detects motor speed exceeding specified speed excessively.	Check load status. Reset alarm.
AL–03	DC link section fuse blown	Detects that fuse F4 in DC link section is blown (models 30S and 40S).	Check power transistors, and so forth. Replace fuse.
AL–04	Input fuse blown. Input power open phase.	Detects blown fuse (F1 to F3), open phase or momentary failure of power (models 30S and 40S).	Replace fuse. Check open phase and power supply regenerative circuit operation.
AL–05	Control power supply fuse blown	Detects that control power supply fuse AF2 or AF3 is blown (models 30S and 40S).	Check for control power supply short circuit . Replace fuse.
AL–07	Excessive speed	Detects that motor rotation has exceeded 115% of its rated speed.	Reset alarm.

Alarm No.	Meaning	Description	Remedy
AL–08	High input voltage	Detects that switch is flipped to 200 VAC when input voltage is 230 VAC or higher (models 30S and 40S).	Flip switch to 230 VAC.
AL–09	Excessive load on main circuit section	Detects abnormal temperature rise of power transistor radiator.	Cool radiator then reset alarm.
AL–10	Low input voltage	Detects drop in input power supply voltage.	Remove cause, then reset alarm.
Alarm No.	Meaning	Description	Remedy
AL–11	Overvoltage in DC link section	Detects abnormally high direct current power supply voltage in power circuit section.	Remove cause, then reset alarm.
AL–12	Overcurrent in DC link section	Detects flow of abnormally large current in direct current section of power cirtcuit	Remove cause, then reset alarm.
AL–13	CPU internal data memory abnormality	Detects abnormality in CPU internal data memory. This check is made only when power is turned on.	Remove cause, then reset alarm.
AL–15	Spindle switch/output switch alarm	Detects incorrect switch sequence in spindle switch/output switch operation.	Check sequence.
AL–16	RAM abnormality	Detects abnormality in RAM for external data. This check is made only when power is turned on.	Remove cause, then reset alarm.
AL–18	Program ROM sum check error	Detects program ROM data error.This check is made only when power is turned on.	Remove cause, then reset alarm.
AL–19	Excessive U phase current detection circuit offset	Detects excessive U phase current detection ciucuit offset. This check is made only when power is turned on.	Remove cause, then reset alarm.
AL–20	Excessive V phase current detection circuit offset	Detects excessive V phase current detection circuit offset. This check is made only when power is turned on.	Remove cause, then reset alarm.
AL–24	Serial transfer data error	Detects serial transfer data error (such as NC power supply turned off, etc.)	Remove cause, then reset alarm.
AL–25	Serial data transfer stopped	Detects that serial data transfer has stopped.	Remove cause, then reset alarm.
AL–26	Disconnection of speed detection signal for Cs contouring control	Detects abnormality in position coder signal(such as unconnected cable and parameter setting error).	Remove cause, then reset alarm.
AL–27	Position coder signal disconnection	Detects abnormality in position coder signal (such as unconnected cable and adjustment error).	Remove cause, then reset alarm.
AL–28	Disconnection of position detection signal for Cs contouring control	Detects abnormality in position detection signal for Cs contouring control (such as unconnected cable and adjustment error).	Remove cause, then reset alarm.
AL–29	Short–time overload	Detects that overload has been continuously applied for some period of time (such as restraining motor shaft in positioning).	Remove cause, then reset alarm.
AL–30	Input circuit overcurrent	Detects overcurrent flowing in input circuit.	Remove cause, then reset alarm.

Alarm No.	Meaning	Description	Remedy
AL–31	Speed detection signal disconnection motor restraint alarm or motor is clamped.	Detects that motor cannot rotate at specified speed or it is detected that the motor is clamped. (but rotates at very slow speed or has stopped). (This includes checking of speed detection signal cable.)	Remove cause, then reset alarm.
AL–32	Abnormality in RAM inside the LSI used for serial data transfer. This check is made only when power is turned on.	Detects abnormality in RAM inside the LSI used for serial data transfer. This check is made only when power is turned on.	Remove cause, then reset alarm.
AL–33	Insufficient DC link section charging	Detects insufficient charging of direct current power supply voltage in power circuit section when magnetic contactor in amplifier is turned on (such as open phase and defectifve charging resistor).	Remove cause, then reset alarm.
AL–34	Parameter data setting beyond allowable range of values	Detects parameter data set beyond allowable range of values.	Set correct data.
AL–35	Excessive gear ratio data setting	Detects gear ratio data set beyond allowable range of values.	Set correct data.
Alarm No.	Meaning	Description	Remedy
AL–36	Error counter overflow	Detects error counter overflow.	Correct cause, then reset alarm.
AL–37	Speed detector parameter setting error	Detects incorrect setting of parameter for number of speed detection pulses.	Set correct data.
AL–39	Alarm for indicating failure in detecting 1–rotation signal for Cs contouring control	Detects 1–rotaion signal detection failure in Cs contouring contorl.	Make 1–rotaion signal adjustment. Check cable shield status.
AL–40	Alarm for indicating 1–rotation signal for Cs contouring control not detected	Detects that 1–rotation signal has not occurred in Cs contouring control.	Make 1–rotaion signal adjustment.
AL–41	Alarm for indicating failure in detecting position coder 1–rotaion signal.	Detects failure in detecting position coder 1–rotation signal.	Make signal adjustment for signal conversion circuit. Check cable shield status.
AL–42	Alarm for indicating position coder 1–rotation signal not detected	Detects that position coder 1–rotation signal has not issued.	Make 1–rotation signal adjustment for signal conversion circuit.
AL–43	Alarm for indicating disconnection of position coder signal for differential speed mode	Detects that main spindle position coder signal used for differential speed mode is not connected yet (or is disconnected).	Check that main spindle position coder signal is connected to connector CN12.
AL–46	Alarm for indicating failure in detecting position coder 1–rotation signal in thread cutting operation.	Detects failure in detecting position coder 1–rotation signasl in thread cutting operation.	Make 1–rotation signal adjustment for signal conversion circuit. Check cable shield status.

Alarm No.	Meaning	Description	Remedy
AL–47	Position coder signal abnormality	Detects incorrect position coder signal count operation.	Make signal adjustment for signal conversion circuit. Check cable shield status.
AL–49	The converted differential speed is too high.	Detects that speed of other spindle converted to speed of local spindle has exceeded allowable limit in differential mode.	Calculate differential speed by multiplying speed of other spindle by gear ratio. Check if calculated value is not greater than maximum speed of motor.
AL–50	Excessive speed command calculation value in spindle synchronization control	Detects that speed command calculation value exceeded allowable range in spindle synchronization control.	Calculate motor speed by multiplying specified spindle speed by gear ratio. Check if calculated value is not greater than maximum speed of motor.
AL–51	Undervoltage at DC link section	Detects that DC power supply voltage of power circuit has dropped (due to momentary power failure or loose contact of magnetic contactor).	Remove cause, then reset alarm.
AL–52	ITP signal abnormality I	Detects abnormality in synchronization signal (ITP signal) used in software.	Replace servo amp. PCB.
AL–53	ITP signal abnormality II	Detects abnormality in synchronization signal (ITP signal) used in hardware.	Replace servo amp. PCB.
AL–54	Overload current alarm	Detects that excessive current flowed in motor for long time.	Remove overload of motor and reset the alarm.
AL–55	Power line abnormality in spindle switching/output switching	Detects that switch request signal does not match power line status check signal.	Check if power line status, check signal is processed normally.

B.4 SPINDLE ALARMS (ANALOG INTERFACE) (S SERIES AC SPINDLE)

Spindle alarms of Model 1S to 3S

Alarm No.	Meaning	Description	Remedy
”A” display	Program ROM abnormality (not installed)	Detects abnormality in ROM.	Exchange ROM
AL–01	Motor overheat	Detects motor speed exceeding specified speed excessively.	Check load status. Cool motor then reset alarm.
AL–02	Excessive speed deviation	Detects motor speed exceeding specified speed excessively.	Check load status. Reset alarm.
AL–03	Defective regenerative current	Detects that regenerative current has flown longer than the allowable time.	Reset alarm after checking cutting condition etc.
AL–04	Not used		
AL–05	Not used		
AL–06	Excessive speed (Analog)	Detects that motot rotation has exceeded 115% of its rated speed.	Reset alarm.
AL–07	Excessive speed (Digital)	Detects that motor rotation has exceeded 115% of its rated speed.	Reset alarm.
AL–08	High input voltage	Detects that input voltage is 230 VAC or higher .	Flip switch to 230 VAC.
AL–09	Not used		
AL–10	Low input voltage	Detects drop in +15V power supply or input power supply voltage.	Remove cause, then reset alarm.
AL–11	Overvoltage in DC link section	Detects abnormally high direct current power supply voltage in power circuit section.	Remove cause, then reset alarm.
AL–12	Overcurrent in DC link section	Detects flow of abnormally large current in direct current section of power cirtcuit	Check transistor and motor coils for their grounding, remove cause, then reset alarm.
AL–13	Defectives CPU and peripherals	Detects abnormal transmission between CPU and peripherals	Exchange PCB.
AL–14	ROM abnormality	Detects abnormality in ROM.	Exchange ROM or PCB.
AL–15	Not used		
AL–16 AL–17	NVRAM abnormality	Detects abnormality in NVRAM for external data.	Exchange NVRAM or PCB.
AL–18 ~ AL–23	Defectives CPU and peripherals	Detects abnormal transmission between CPU and peripherals	Exchange PCB.

Spindle alarms of Model 6S to 26S

Alarm No.	Meaning	Description	Remedy
”A” display	Program ROM abnormality (not installed)	Detects abnormality in ROM.	Exchange ROM
AL–01	Motor overheat	Detects motor speed exceeding specified speed excessively.	Check load status. Cool motor then reset alarm.
AL–02	Excessive speed deviation	Detects motor speed exceeding specified speed excessively.	Check load or other status on the motor, correct failure, then reset the alarm.
AL–03 *	+24V fuse is blown.	+24V fuse of the control power is blown	Check control power if it is shorted and replace fuses.
AL–04	Blown of input fuse Lack of phase of input power supply	One of fuse F1 to F3 is flown or lack of phase or momentary power failure was detected.	Check lack of phase of power supply and power regenerative circuit and replace fuse if required.
AL–05	Not used		
AL–06	Excessive speed (Analog)	Detects that motot rotation has exceeded 115% of its rated speed.	Remove cause, then reset alarm.
AL–07	Excessive speed (Digital)	Detects that motor rotation has exceeded 115% of its rated speed.	Remove cause, then reset alarm.
AL–08	High input voltage	Detects that input voltage is 230 VAC or higher .	Flip switch to 230 VAC.
AL–09	Overheat of radiator	Temperature of radiator used for transistor is extremely high.	Cool radiator then reset alarm.
AL–10	Low input voltage	Detects drop in +15V power supply or input power supply voltage.	Remove cause, then reset alarm.
AL–11	Overvoltage in DC link section	Detects abnormally high direct current power supply voltage in power circuit section.	Remove cause, then reset alarm.
AL–12	Overcurrent in DC link section	Detects flow of abnormally large current in direct current section of power cirtcuit	Remove cause, then reset alarm.
AL–13	Defectives CPU and peripherals	Detects abnormal transmission between CPU and peripherals	Exchange PCB.
AL–14	ROM abnormality	Detects abnormality in ROM.	Exchange ROM or PCB.
AL–15	Defective optional circuit	Detects defective optional circuit (switch sequence in spindle switch/output switch operation) and erroneous connection to optional circuit.	Check sequence ,then exchange PCB.
AL–16 AL–17	NVRAM abnormality	Detects abnormality in NVRAM for external data.	Exchange NVRAM or PCB.
AL–18 ~ AL–23	Defectives CPU and peripherals	Detects abnormal transmission between CPU and peripherals	Exchange PCB.

* Not displayed in PCB version number 10B and later.

- **Method of resetting alarm**

Press MODE and DATA SET key at the same time.

Note

There is a possibility that the spindle may rotate immediately after an alarm is released. Therefore, reset an alarm under the emergency stop state and the rotation command being off.

Alarm is not released if the cause of the alarm is not removed.

C LIST OF MAINTENANCE PARTS

C.1 MAINTENANCE PARTS 472

C.1 MAINTENANCE PARTS

Maintenance Parts

Consumables here refer to the parts which are not reused after replacement. Rank : AA>A>BB>B>CC>C

Name		Drawing number	Remarks		Compatibility	Rank
Fan motor	For 2–slot case	A90L–0001–0378	One piece required per 2 slots	2.4W		A
	For 1–slot case	A90L–0001–0385#A	Two pieces are required at the 3rd slot track	1.7W		A
Battery		A98L–0031–0012				A
Fuse	For AI	A60L–0001–0245#GP75	F1(7.5A)			B
		A60L–0001–0075#3.2	F3 (3.2A)			B
		A60L–0001–0046#5.0	F4 (5AS)			B
	For BI	A60L–0001–0245#GP75	F1 (7.5A)			B
		A60L–0001–0075#5.0	F3 (5A)			B
		A60L–0001–0046#5.0	F4 (5AS)			B
Small keyboard	TB	A86L–0001–0171#ST2	Usable units A02B–0120–C041#TA A02B–0120–C042#TA A02B–0120–C043#TA A02B–0120–C121#TA			B
		A86L–0001–0171#ST2R	Usable units A02B–0120–C041#TAR A02B–0120–C043#TAR A02B–0120–C121#TAR			B
		A86L–0001–0171#ST2S	Usable units A02B–0120–C041#TAS A02B–0120–C043#TAS A02B–0120–C121#TAS			B
	MB	A86L–0001–0171#SM2	Usable units A02B–0120–C041#MA A02B–0120–C042#MA A02B–0120–C121#MA			B
		A86L–0001–0171#SM2R	Usable units A02B–0120–C041#MAR A02B–0120–C121#MAR			B
		A86L–0001–0171#SM2S	Usable units A02B–0120–C041#MAS A02B–0120–C121#MAS			B

Name		Drawing number	Remarks	Compati-bility	Rank
Standard keyboard	TB	A86L–0001–0172#HT2	Usable units A02B–0120–C051#TA A02B–0120–C052#TA A02B–0120–C122#TA		B
		A86L–0001–0172#HT2R	Usable units A02B–0120–C051#TAR A02B–0120–C122#TAR		B
		A86L–0001–0172#HT2S	Usable units A02B–0120–C051#TAS A02B–0120–C122#TAS		B
	MB	A86L–0001–0172#HM2	Usable units A02B–0120–C051#MA A02B–0120–C052#MA A02B–0120–C122#MA		B
		A86L–0001–0172#HM2R	Usable units A02B–0120–C051#MAR A02B–0120–C122#MAR		B
		A86L–0001–0172#HM2S	Usable units A02B–0120–C051#MAS A02B–0120–C122#MAS		B
Keyboard for horizontal 9.5″ LCD/ MDI	TB	A86L–0001–0173#HT2	Usable units A02B–0200–C061#TB A02B–0200–C065#TB		B
		A86L–0001–0173#HT2R	Usable units A02B–0200–C061#TBR A02B–0200–C065#TBR		B
		A86L–0001–0173#HT2S	Usable units A02B–0200–C061#TBS A02B–0200–C065#TBS		B
	With TB CAP–II	A86L–0001–0173#HF1	Usable units A02B–0200–C061#TFB A02B–0200–C065#TFB		B
		A86L–0001–0173#HF1R	Usable units A02B–0200–C061#TFBR A02B–0200–C065#TFBR		B
		A86L–0001–0173#HF1S	Usable units A02B–0120–C061#TFBS A02B–0120–C065#TFBS		B
	MB	A86L–0001–0173#HM2	Usable units A02B–0200–C061#MB A02B–0200–C065#MB		B
		A86L–0001–0173#HM2R	Usable units A02B–0200–C061#MBR A02B–0200–C065#MBR		B
		A86L–0001–0173#HM2S	Usable units A02B–0200–C061#MBS A02B–0200–C065#MBS		B

Name		Drawing number	Remarks	Compati-bility	Rank
Key board for horizontal 14″ CRT/ MDI	TB	A86L–0001–0174#HT2	Usable units A02B–0120–C071#TA A02B–0120–C074#TA A02B–0200–C071#TB A02B–0200–C074#TB		B
		A86L–0001–0174#HT2R	Usable units A02B–0200–C071#TBR		B
		A86L–0001–0174#HT2S	Usable units A02B–0200–C071#TBS		B
	With TB CAP–II	A86L–0001–0174#HF1	Usable units A02B–0120–C071#TF A02B–0120–C071#TF A02B–0200–C071#TFB A02B–0200–C074#TFB		B
		A86L–0001–0174#HF1R	Usable units A02B–0200–C071#TFBR		B
		A86L–0001–0174#HF1S	Usable units A02B–0200–C071#TFBS		B
	MB	A86L–0001–0174#HM2	Usable units A02B–0120–C071#MA A02B–0200–C071#MB		B
		A86L–0001–0174#HM2R	Usable units A02B–0200–C071#MBR		B
		A86L–0001–0174#HM2S	Usable units A02B–0200–C071#MBS		B

Name		Drawing number	Remarks	Compati-bility	Rank
Keyboard for vertical 9.5″ LCD/MDI and 14″ CRT/MDI	TB	A86L–0001–0175#VT2	Usable units A02B–0120–C072#TA A02B–0200–C062#TB A02B–0200–C066#TB		B
		A86L–0001–0175#VT2R	Usable units A02B–0200–C062#TBR A02B–0200–C066#TBR		B
		A86L–0001–0175#VT2S	Usable units A02B–0200–C062#TBS A02B–0200–C066#TBS		B
	With TB CAP–II	A86L–0001–0175#VF1	Usable units A02B–0120–C072#TF A02B–0200–C062#TFB A02B–0200–C066#TFB		B
		A86L–0001–0175#VF1R	Usable units A02B–0200–C062#TFBR A02B–0200–C066#TFBR		B
		A86L–0001–0175#VF1S	Usable units A02B–0200–C062#TFBS A02B–0200–C066#TFBS		B
	MB	A86L–0001–0175#VM2	Usable units A02B–0120–C072#MA A02B–0200–C062#MB A02B–0200–C066#MB		B
		A86L–0001–0175#VM2R	Usable units A02B–0200–C062#MBR A02B–0200–C066#MBR		B
		A86L–0001–0175#VM2S	Usable units A02B–0200–C062#MBS A02B–0200–C066#MBS		B

Maintenance Parts (Parts to be repaired by us)

Name		Drawing number	Remarks	Compatibility	Rank
Series 16 control rack (without MMC–IV)	2–SLOT	A02B–0200–C001			C
		A02B–0200–C021	For power C		C
	3–SLOT	A02B–0200–C005			C
	4–SLOT	A02B–0200–C002			C
	6–SLOT	A02B–0200–C003			C
	8–SLOT	A02B–0200–C004			C
Series 16 control rack (with MMC–IV)	4–SLOT	A02B–0200–C010			C
	6–SLOT	A02B–0200–C011			C
	8–SLOT	A02B–0200–C012			C
Series 18 control rack (without MMC–IV)	2–SLOT	A02B–0129–C001			C
		A02B–0129–C021	For power C		C
	3–SLOT	A02B–0129–C005			C
	4–SLOT	A02B–0129–C002			C
	6–SLOT	A02B–0129–C003			C
Series 18 control rack (with MMC–IV)	4–SLOT	A02B–0129–C010			C
	6–SLOT	A02B–0129–C011			C
Power supply unit	AI	A16B–1212–0900			B
Power supply unit	BI	A16B–1212–0870			B
Power supply unit	C	A20B–1005–0420			B
Main CPU board	Series 16	A16B–3200–0010	MAIN–A, 4 axes		B
		A16B–3200–0170			B
		A16B–3200–0110	MAIN–B, 6 axes		B
	Series 18	A16B–2202–0860	4–axis specification		B
		A16B–3200–0160	6–axis specification		B

Name		Drawing number	Remarks	Compatibility	Rank
Option 1 board	Graphic+ remote buffer	A16B–2200–0918			B
	Graphic+ DNC1	A16B–2200–0916			B
	Remote buffer	A16B–2200–0913			B
	DNC1	A16B–2200–0914			B
	Graphic	A16B–2200–0919			B
Option 2 board	Series 16 with sub–CPU	A16B–2202–0400	MAIN–A specification, 4 axes		B
		A16B–2202–0890			B
	Series 16 without sub–CPU	A16B–2202–0401	MAIN–A specification, 4 axes		B
		A16B–2202–0891			B
	Series 16 with sub–CPU	A16B–2202–0850	MAIN–B specification, 6 axes		B
	Series 16 without sub–CPU	A16B–2202–0851	MAIN–B specification		B
	Series 18 with sub–CPU	A16B–2202–0853			B
Option 3 board	PMC–RC +CAP–II	A16B–3200–0055			B
	PMC–RC	A16B–3200–0054			B
	CAP–II	A16B–3200–0057			B
Loader control board	Series 16	A16B–2202–0560	MAIN–A specification		B
	Series 18	A16B–2202–0880	MAIN–B specification		B
Background drawing board		A16B–2202–0852			B

Name		Drawing number	Remarks	Compatibility	Rank
I/O card (sink type output)	A(40/40)	A16B–2200–0958	Without high–speed skip signal input		B
	B(80/56)	A16B–2200–0957			B
	C(104/72)	A16B–2200–0956			B
	D(156/120)	A16B–2200–0955 A20B–9001–0480	Without high–speed skip signal input To be used as a pair.		B
	E(40/40)	A16B–2200–0953	With high–speed skip signal input		B
	F(80/56)	A16B–2200–0952			B
	G(104/72)	A16B–2200–0951			B
	H(156/120)	A16B–2200–0950 A20B–9001–0480	With high–speed skip signal input To be used as a pair.		B
	I	A16B–2200–0954	High–speed skip signal input only		B
I/O card (source type output)	A(40/40)	A16B–2200–0988	Without high–speed skip signal input		B
		A16B–2202–0728			B
	B(80/56)	A16B–2200–0987			B
		A16B–2202–0727			B
	C(104/72)	A16B–2200–0986			B
		A16B–2202–0726			B
	D(156/120)	A16B–2202–0725 A20B–8001–0150	Without high–speed skip signal input To be used as a pair.		B
	E(40/40)	A16B–2200–0983	With high–speed skip signal input		B
		A16B–2202–0723			B
	F(80/56)	A16B–2200–0982			B
		A16B–2202–0722			B
	G(104/72)	A16B–2200–0981			B
		A16B–2202–0721			B
	H(156/120)	A16B–2202–0720 A20B–8001–0150	With high–speed skip signal input To be used as a pair.		B
Operator’s panel connection unit (sink type output)	A(64/32)	A16B–2200–0661			B
	B(94/64)	A16B–2200–0660			B
Operator’s panel connection unit (source type output)	A(64/32)	A16B–2202–0731			B
	B(94/64)	A16B–2202–0730			B
Operator’s panel interface unit		A16B–2201–0110			B

Name		Drawing number	Remarks	Compatibility	Rank
Serial/DMA add–on board	4CH	A20B–2200–0010	For option 3 board		B
	2CH	A20B–2200–0011			B
Graphic add–on board	For 2 paths	A20B–8200–0010	For main CPU board		B
	For 1 path	A20B–8200–0011			B
PMC control module	For PMC–RE	A20B–2900–0140			B
	Loader control, with SLC	A20B–2900–0142			B
	Loader control, without SLC For PMC–RC3	A20B–2900–0143			B
	For PMC–RB3/RC3, with SLC	A20B–2901–0960			B
	For PMC–RB3/RC3, without SLC	A20B–2901–0961			B
High–speed DI, analog I/O module	Analog I/O + high–speed skip DI	A20B–2900–0280			B
	High–speed skip DI	A20B–2900–0281			B
ROM module	1MB	A20B–2900–0290			B
	768KB	A20B–2900–0291			B
Graphic control module		A20B–2900–0311			B
Grahic CPU module		A20B–2900–0350			B
SRAM module (512 KB)		A20B–2900–0541			B
14–bit A/D converter module		A20B–2900–0580			B
SRAM module (2 MB)		A20B–2900–0991			B
CAP–II CPU module		A20B–2901–0390			B
DRAM/SRAM module		A20B–2901–0413			B
DRAM module	6MB	A20B–2901–0940			B
	4MB	A20B–2901–0941			B
	2MB	A20B–2901–0942			B

Name		Drawing number	Remarks	Compatibility	Rank
Spindle control module	Serial + analog	A20B–2901–0980	For main CPU board		B
	Serial	A20B–2901–0981			B
	Analog	A20B–2901–0982			B
	Serial + analog	A20B–2901–0984	For option 2 board		B
	Serial	A20B–2901–0985			B
	Analog	A20B–2901–0986			B
Servo control module		A20B–2901–0060			B
		A20B–2901–0061	For learning–control function		B
FROM/ SRAM module	FROM 4MB SRAM 512KB	A20B–2902–0080			B
	FROM 4MB	A20B–2902–0081			B
	FROM 2MB	A20B–2902–0082			B
FROM/ SRAM module	FROM 8MB SRAM 2MB	A20B–2902–0090			B
	FROM 8MB	A20B–2902–0091			B
	FROM 6MB	A20B–2902–0092			B
	FROM 8MB SRAM 512KB	A20B–2902–0093			B
	FROM 6MB SRAM 512KB	A20B–2902–0094			B
DRAM module	512KB+2MB	A20B–2902–0191			B
	512KB+1MB	A20B–2902–0192			B
	512KB+ 512KB	A20B–2902–0193			B
	512KB	A20B–2902–0194			B
	2MB	A20B–2902–0196			B
	1MB	A20B–2902–0197			B
	512KB	A20B–2902–0198			B
PMC control module For PMC–RC4/RB4		A20B–2902–0250			B

Name		Drawing number	Remarks	Compatibility	Rank
CRT control module	For 14″CRT	A20B–2902–0270	When MMC is not provided		B
	For 9″CRT	A20B–2902–0271			B
	For LCD	A20B–2902–0272			B
	For 14″CRT	A20B–2902–0273	When MMC is provided		B
	For LCD	A20B–2902–0275			B
	For 9″CRT	A20B–2902–0276	When MMC is not provided		B
	For LCD	A20B–2902–0277			B
	For 14″CRT	A20B–2902–0278			B
FROM/ SRAM module	FROM 4MB SRAM 256KB	A20B–2902–0341			B
	FROM 4MB SRAM 256KB	A20B–2902–0343			B
SRAM module	256KB	A20B–2902–0350			B
	256KB+ 512KB	A20B–2902–0351			B
	256KB+2MB	A20B–2902–0352			B
FROM/ SRAM module	FROM 8MB SRAM 256KB	A20B–2902–0410			B
	FROM 6MB SRAM 256KB	A20B–2902–0411			B
Series 16 control rack (without MMC–IV)	2–SLOT	A20B–2000–0630			B
		A20B–2001–0870	For I/O card with power supply		B
	3–SLOT	A20B–2000–0620			B
	4–SLOT	A20B–2000–0640			B
	6–SLOT	A20B–2000–0650			B
	8–SLOT	A20B–2000–0610			
Series 16 control rack (with MMC–IV)	4–SLOT	A20B–2001–0490			B
	6–SLOT	A20B–2001–0652			B
	8–SLOT	A20B–2001–0662			B
Series 18 control rack (without MMC–IV)	2–SLOT	A20B–2002–0090			B
		A20B–2002–0110	For I/O card with power supply		B
	3–SLOT	A20B–2002–0020			B
	4–SLOT	A20B–2001–0190			
	6–SLOT	A20B–2001–0200			B

Name		Drawing number	Remarks	Compatibility	Rank
Series 18 control rack (with MMC–IV)	4–SLOT	A20B–2002–0100			B
	6–SLOT	A20B–2002–0120			B
Optical I/O link adapter		A13B–0154–B001			B

Maintenance Parts

Name		Drawing number	Remarks	Compati-bility	Rank
9″ CRT/MDI (Small key, monochrome)	TB	A02B–0120–C041#TA	For system without MMC–IV		B
		A02B–0120–C041#TAR			B
		A02B–0120–C041#TAS			B
		A02B–0120–C043#TA			B
		A02B–0120–C043#TAR			B
		A02B–0120–C043#TAS			B
	MB	A02B–0120–C041#MA			B
		A02B–0120–C041#MAR			B
		A02B–0120–C041#MAS			B
9″ CRT/MDI (Small key, color)	TB	A02B–0120–C042#TA			B
	MB	A02B–0120–C042#MA			B
9″ CRT/MDI (Standard key, monochrome)	TB	A02B–0120–C051#TA			B
		A02B–0120–C051#TAR			B
		A02B–0120–C051#TAS			B
	MB	A02B–0120–C051#MA			B
		A02B–0120–C051#MAR			B
		A02B–0120–C051#MAS			B
9″ CRT/MDI (Small key, color)	TB	A02B–0120–C052#TA			B
	MB	A02B–0120–C052#MA			B
9″ PDP/MDI (Standard key, monochrome)	TB	A02B–0120–C081#TA			B
		A02B–0200–C101#TBR			B
		A02B–0200–C101#TBS			B
	MB	A02B–0120–C081#MA			B
		A02B–0200–C101#MBR			B
		A02B–0200–C101#MBS			B
9″ separate type CRT unit	mono-chrome	A02B–0120–C111			B
	color	A02B–0120–C112			B
9″ separate type PDP unit	mono-chrome	A02B–0120–C113			B
	color	A02B–0120–C100			B
8.4″ separate type LCD unit	color	A02B–0200–C050			B
7.2″ separate type LCD unit	mono-chrome	A02B–0200–C081			B

Name		Drawing number	Remarks	Compati-bility	Rank
Separate type MDI unit (small key)	TB	A02B–0120–C121#TA	It is not relative whether with MMC–IV or not		B
		A02B–0120–C121#TAR			B
		A02B–0120–C121#TAS			B
	MB	A02B–0120–C121#MA			B
		A02B–0120–C121#MAR			B
		A02B–0120–C121#MAS			B
Separate type MDI unit (standard key)	TB	A02B–0120–C122#TA			B
		A02B–0120–C122#TAR			B
		A02B–0120–C122#TAS			B
	MB	A02B–0120–C122#MA			B
		A02B–0120–C122#MAR			B
		A02B–0120–C122#MAS			B
9.5″ LCD/MDI unit horizontal	TB	A02B–0200–C061#TB	For system without MMC–IV		B
		A02B–0200–C061#TBR			B
		A02B–0200–C061#TBS			B
	TB With CAP–II	A02B–0200–C061#TFB			B
		A02B–0200–C061#TFBR			B
		A02B–0200–C061#TFBS			B
	MB	A02B–0200–C061#MB			B
		A02B–0200–C061#MBR			B
		A02B–0200–C061#MBS			B
9.5″ LCD/MDI unit vertical	TB	A02B–0200–C062#TB			B
		A02B–0200–C062#TBR			B
		A02B–0200–C062#TBS			B
	TB With CAP–II	A02B–0200–C062#TFB			B
		A02B–0200–C062#TFBR			B
		A02B–0200–C062#TFBS			B
	MB	A02B–0200–C062#MB			B
		A02B–0200–C062#MBR			B
		A02B–0200–C062#MBS			B
14″ CRT/MDI horizontal	TB	A02B–0120–C071#TA			B
	TB With CAP–II	A02B–0120–C071#TF			B
	MB	A02B–0120–C071#MA			B
	TB	A02B–0120–C074#TA			B
	TB With CAP–II	A02B–0120–C074#TF			B
14″ CRT/MDI vertical	TB	A02B–0120–C072#TA	For system without MMC–IV		B
	TB With CAP–II	A02B–0120–C072#TF			B
	MB	A02B–0120–C072#MA			B

Name		Drawing number	Remarks	Compati-bility	Rank
14″ CRT/MDI horizontal	TB	A02B–0200–C071#TB	For system with MMC–IV		B
		A02B–0200–C071#TBR			B
		A02B–0200–C071#TBS			B
	TB With CAP–II	A02B–0200–C071#TFB			B
		A02B–0200–C071#TFBR			B
		A02B–0200–C071#TFBS			B
	MB	A02B–0120–C071#MB			B
		A02B–0200–C071#MBR			B
		A02B–0200–C071#MBS			B
14″ CRT/MDI vertical	TB	A02B–0200–C072#TB	For system with MMC–IV		B
		A02B–0200–C072#TBR			B
		A02B–0200–C072#TBS			B
	TB With CAP–II	A02B–0200–C072#TFB			B
		A02B–0200–C072#TFBR			B
		A02B–0200–C072#TFBS			B
	MB	A02B–0120–C072#MB			B
		A02B–0200–C072#MBR			B
		A02B–0200–C072#MBS			B
9.5″ LCD/MDI horizontal	TB	A02B–0200–C065#TB			B
		A02B–0200–C065#TBR			B
		A02B–0200–C065#TBS			B
	TB With CAP–II	A02B–0200–C065#TFB			B
		A02B–0200–C065#TFBR			B
		A02B–0200–C065#TFBS			B
	MB	A02B–0120–C065#MB			B
		A02B–0200–C065#MBR			B
		A02B–0200–C065#MBS			B
9.5″ LCD/MDI vertical	TB	A02B–0200–C066#TB	For system with MMC–IV		B
		A02B–0200–C066#TBR			B
		A02B–0200–C066#TBS			B
	TB With CAP–II	A02B–0200–C066#TFB			B
		A02B–0200–C066#TFBR			B
		A02B–0200–C066#TFBS			B
	MB	A02B–0120–C066#MB			B
		A02B–0200–C066#MBR			B
		A02B–0200–C066#MBS			B
8.4″ separate type LCD unit	color	A02B–0200–C051			B
9″ monochrome, CRT display		A61L–0001–0093	Usable unit A02B–0120–C041#TA,#MA A02B–0120–C051#TA,#MA A02B–0120–C111	For system without MMC–IV	B

Name	Drawing number	Remarks	Compatibility	Rank
9″monochrome, CRT display	A61L–0001–0093#A	Usable unit A02B–0120–C043#TA	For system without MMC–IV	B
9″color, CRT display	A61L–0001–0095	Usable unit A02B–0120–C041#TA,#MA A02B–0120–C052#TA,#MA A02B–0120–C112		B
9″plasma display	A61L–0001–0116	Usable unit A02B–0120–C081#TA,#MA A02B–0120–C113		B
14″color,CRT display	A61L–0001–0094#A	Usable unit A02B–0120–C071#TA,#MA #TF,#WA A02B–0120–C072#TA,#MA #TF,#MC A02B–0120–C074#TA,#TF		B
9.5″color, LCD display	A61L–0001–0138	Usable unit A02B–0200–C061#TB,#TFB #MB A02B–0200–C062#TB,#TFB #MB A02B–0200–C065#TB,#TFB #MB A02B–0200–C066#TB,#TFB #MB	It is not relative whether with MMC–IV or not	B
8.4″color, LCD display	A61L–0001–0139	Usable unit A02B–0200–C050 A02B–0200–C051		B

D BOOT SYSTEM

D.1 OVERVIEW 488
D.2 SCREEN CONFIGURATION AND OPERATING PROCEDURE 490
D.3 ERROR MESSAGES AND REQUIRED ACTIONS 504

D.1 OVERVIEW

The boot system load the CNC system software (flash RAM”DRAM), then starts it so that software can be executed.
The boot system provides the following maintenance functions for the CNC:

(1) Registering a file in flash memory

- Reads a file from a memory card, in MS–DOS format conforming to JEIDA V4.1, into flash memory.

(2) Checking a file (series and edition) in flash memory

(3) Deleting a file from flash memory

(4) Batch saving and restoration of files of parameters and programs backed up by battery (SRAM area), to and from a memory card

(5) Saving a file in flash memory to a memory card

(6) Formatting of a memory card

(7) Deleting a file from a memory card

This manual describes the activation of the boot system, as well as the screen displays and operation for the functions listed above.

A kind of memory card

1 We recommend to use SRAM type memory card. When you use flash type memory card, it is impossible to use functions (4) to (7).
2 For the 60M1/05 and later versions, data can be saved to a flash memory card recommended by FANUC. Note, however, that the actually available memory is equal to the capacity of the flash memory card, minus 128 KB. The types of memory cards which can be used are detailed in the ordering list.

D.1.1 STARTING THE BOOT SYSTEM

In ordinary system activation, the boot system automatically transfers files from flash memory to DRAM in the background.
The user is not aware of this operation. However, the boot system must be operated manually, from menu screen, when maintenance is to be carried out or when the flash memory does not contain a required file.

1 In system maintenance, for example, to replace a file in memory
Operation : Turn the power on by simultaneously pressing the two soft keys at the right end.

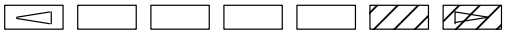

Hold down the two keys until the boot system screen appears.

2 When the flash memory does not contain a file required to start the CNC

Immediately after the CNC is turned on, the boot system starts transferring files from flash memory to DRAM. If, for some reason, a file required to start the CNC (NC basic) is not in flash memory or has been destroyed, the boot system is automatically started.

D.1.2 System Files and User Files

The boot system organizes files in flash memory into two main groups : system files and user files. These two file types have the following characteristics :

- **System files** — CNC and servo control software provided by FANUC
- **User files** — PMC sequence program (ladder), P–CODE macro program, and other user–created files

D.1.3 Boot Slot Configuration Screen

When the CNC includes OPT2 board or LCB, we have to access to flash memory or SRAM that mounted on additional board. So, the boot system displays BOOT SLOT CONFIGURATION screen that to select a access board.

- **Screen configuration**

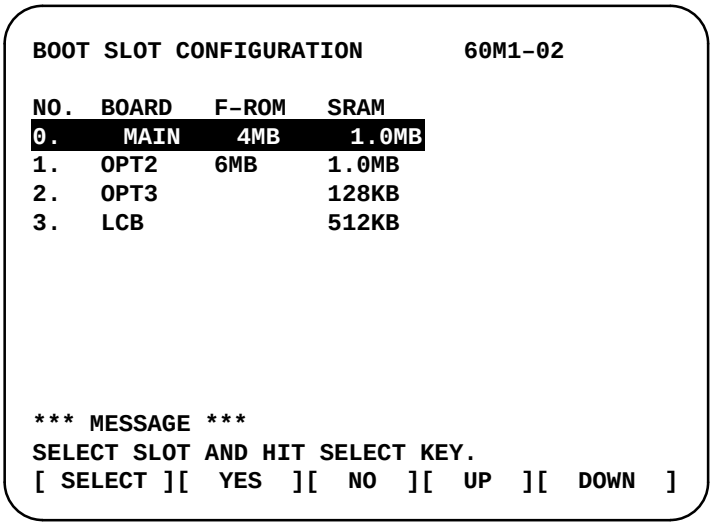

1 : Screen title.

2 : Flash memory size and SRAM size of each board.

3 : Message

- **Operation** — Press the **[UP]** or **[DOWN]** soft key to move the cursor, and select board to press the **[SELECT]** soft key.

Memory card slot

The memory card slot on the loader control board (LCB) is provided specifically for the ladder edit card for the loader. When a memory card is to be used in the boot system, insert the card into the slot provided on the main board.

D.2 SCREEN CONFIGURATION AND OPERATING PROCEDURE

When the boot system is first started, the MAIN MENU screen is displayed. This screen is described below :

- **MAIN MENU screen**

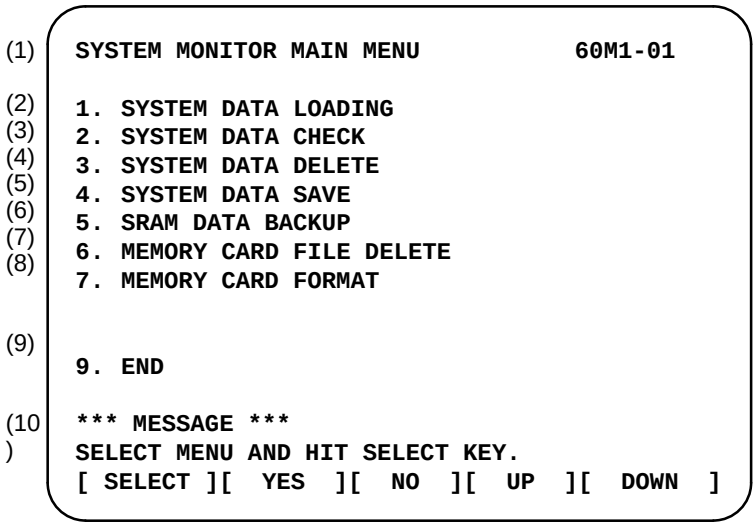

1 : Screen title. The series and edition of the boot system appear at the right end.

2 : Function for writing data to flash memory.

3 : Function for checing the edition of a file in ROM.

4 : Function for deleting a file from flash memory.

5 : Function for making a backup copy of the data stored on the memory card.

6 : Function for making a backup copy of the data in SRAM.

7 : Function for deleting a file from a memory card.

8 : Function for formatting a memory card.

9 : Function for terminating the boot system and starting the CNC.

10 : Condensed guidance or error message

- **Operating procedure**

Press the **[UP]** or **[DOWN]** soft key to select the desired function. After positioning the cursor to the desired function, press the **[SELECT]** soft key. Before executing a function, the system my request confirmation from the operator by having him/her press the **[YES]** or **[NO]** soft key.

- **Basic operation**

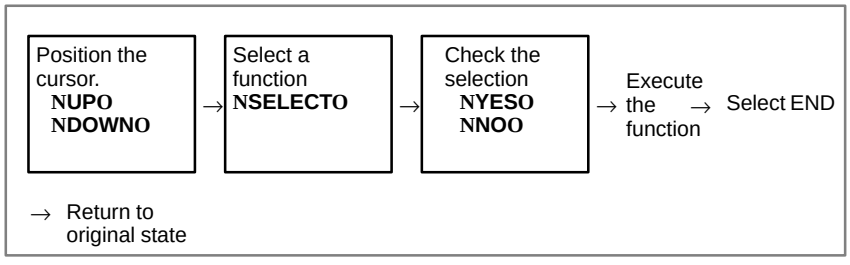

D.2.1 System Data Loading Screen

- **Description**

This screen is used to read a system or user file from a memory card into flash memory.

- **Screen configuration**

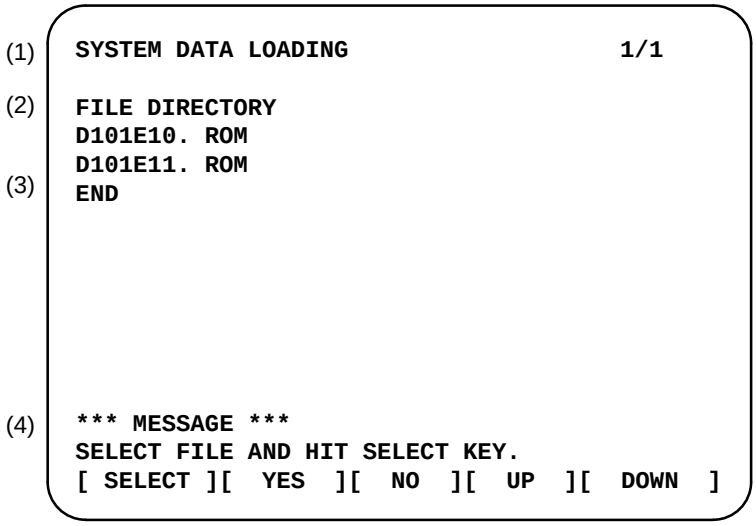

1 : Screen title. The page number (n) and total number of pages (m) are displayed, in n/m format, at the right end.

2 : Files on the memory card

3 : Option for returning to previous menu Message

4 : Message

- **Operating procedure**

1 Position the cursor to the file to be read from the memory card and written to flash memory. Then, press the **[SELECT]** soft key.

A single page can list up to eight file names. If the memory card contains nine or more files, the remaining files are displayed on another page.

To display the next page, press the ▷ soft key.

To display the previous page, press the ◁ soft key. The END option is displayed on the last page.

The END option is displayed on the last page.

2 After a file has been slected, the system asks whether that file is to be loaded.

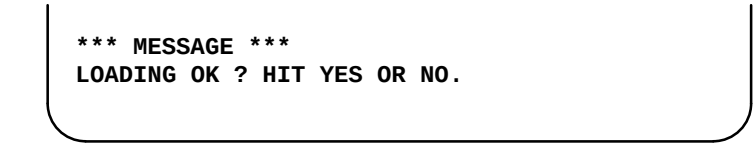

3 To start loading, press the **[YES]** soft key. To cancel, press the **[NO]** key.

```
*** MESSAGE ***
LOADING FROM MEMORY CARD.
```

4 When loading terminates normally, the system displays the following message. Press the **[SELECT]** soft key. If an error occurs, see D.3

```
*** MESSAGE ***
LOADING COMPELETE. HIT SELECT KEY.
```

- **Others**

1 Counter display while a file is being loaded

While a file is being loaded, the address of the data currently being accessed is displayed.

```
*** MESSAGE ***
LOADING FROM MEMORY CARD.
ADDRESS 001:          ← The counter appears under the
                        message fild.
   (1)
```

1 : Number of 128–KB management unit in flash memory

2 File name in flash memory

The boot systme identifies a file in flash memory by the first four characters of the file name. If the name of the file to be read from the memory card and the name of a file already present in flash memory begin with the same four characters, delete the latter from flash memory. Then, load the desired file. The following table lists the names and contents of files.

Note
that these file names may be changed without notice.

File name	Contents	File type
NC BASIC	Basic	System file
DG SERVO	Servo	System file
GRAPHIC	Graphic	System file
NC□ OPTN	Optional	System file
PMC□****	PMC control software, etc.	System file
PCD ****	P–CODE macro file/ OMM	User file
CEX ****	C–language executor	User file
PMC - ****	Ladder software	User file
PMC@****	Ladder software for the loader	User file

□ : A numeric character, * : An alphabetic character

D.2.2 System Data Check Screen

- **Description**

This screen is used to list files in flash memory, together with the corresponding numbers of 128–KB management units in each file and the series and edition of the software.

- **Screen configuration**

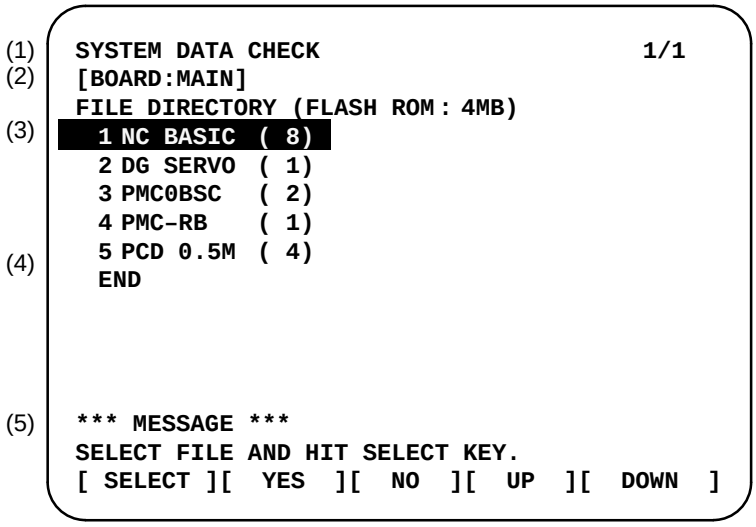

1 : Screen title

2 : Names of accessing board

3 : Names of files in flash memory The number of management units constituting each file appears in parentheses to the right of the file name.

4 : Returning to the previous menu

5 : Message

- **Operating procedure**

1 Select the file whose details are required. For example, select ”1 NC BASIC (8).”

2 The numbers of management units in the selected file are listed, together with the series and edition of the software in each management unit. After checking the listed data, select the **[SELECT]** soft key to return to the file selection screen.

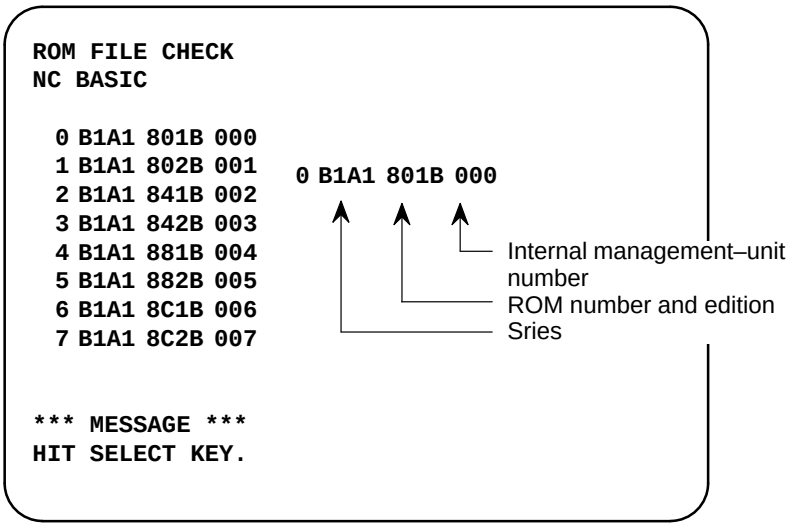

- **Others**

Parity information for the system file and user file

The NC BASIC, DG SERVO, and other system files in flash memory contain parity information in each management unit. If the file name field or parity field on the check screen contains a non–ASC II character or an ”@” , the flash ROM may have been destroyed or a damaged file may have been read. Re–read the data from the memory card.

The PMC–RB, PCD 0.5M, and other user files do not contain parity information in each management unit. A non–ASCII character or an ”@” may appear in the series/edition information. In this case, it does not indicate that the file has been damaged.

D.2.3 System Data Delete Screen

- **Description**

This screen is used to delete a user file from flash memory.

- **Screen configuration**

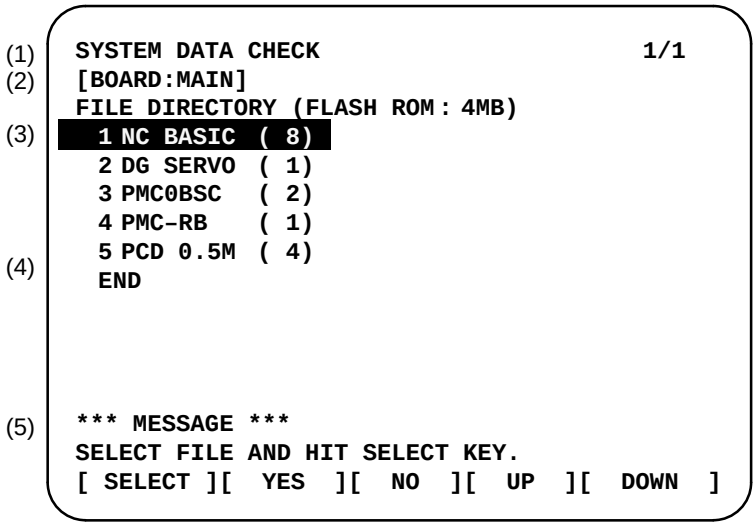

1 : Screen title
2 : Names of accessing board
3 : Names of files in flash memory The number of management units constituting each file appears in parentheses to the right of the file name.
4 : Returning to the previous menu
5 : Message

- **Operating procedure**

1 Position the cursor to the name of the file to be deleted. Press the **[SELECT]** soft key.
2 The system displays the following confirmation message :

```
*** MESSAGE ***
DELETE OK ? HIT YES OR NO.
```

3 To start the deletion, press the **[YES]** key. To cancel, press **[NO]**.

```
*** MESSAGE ***
DELETING ROM FILE IN FLASH MEMORY.
```

4 When deletion terminates normally, the system displays the following message. Press the **[SELECT]** key.

```
*** MESSAGE ***
DELETING COMPLETE. HIT SELECT KEY.
```

- **Others**

1 System files and user files on SYSTEM DATA DELETE screen The SYSTEM DATA DELETE screen guards against system files being accidentally deleted by the operator. User files, however, are not protected. Protected system files can be overwritten from the SYSTEM DATA LOADING screen.

D.2.4 SYSTEM DATA SAVE Screen

- **Description**

This screen is used to write a user file in flash memory to a memory card. Only user files can be saved from flash memory to a memory card. System files cannot be saved.

- **Screen configuration**

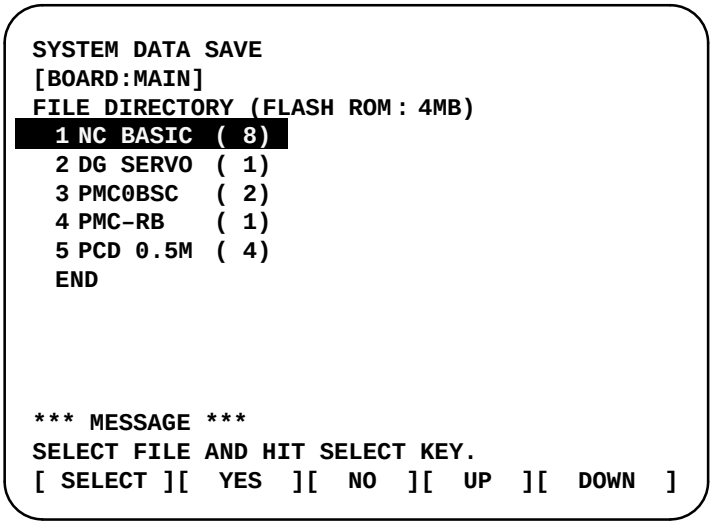

1 : Screen title

2 : Names of accessing board

3 : Names of files in flash memory The number of management units constituting each file appears in parentheses to the right of the file name.

4 : Returning to the previous menu

5 : Message

- **Operating procedure**

1 Position the cursor to the name of the file to be deleted. Press the **[SELECT]** soft key.

2 The system displays the following confirmation message :

```
*** MESSAGE ***
SAVE OK ? HIT YES OR NO.
```

3 To start saving, press the **[YES]** key. To cancel, press **[NO]**.

```
*** MESSAGE ***
WRITING FLASH ROM FILE TO MEMORY CARD.
SAVE FILE NAME : PMC_RB.000
```

4 When saving terminates normally, the system displays the following message. Press the **[SELECT]** key. The names of files written to the memory card are listed. Check the file names by, for example, making a note of the list.

```
*** MESSAGE ***
FILE SAVE COMPELETE. HIT SELECT KEY.
SAVE FILE NAME : PMC_RB.000
```

- **Others**

1 System files and user files on SYSTEM DATA SAVE screen

The SYSTEM DATA SAVE function provides a safeguard against free copying of the system files.

User files, however, are not protected.

2 Names of saved files

Files saved from flash memory to a memory card have the following names :

Flash memory		Memory card
PMC–RA	→	PMC_RA. XXX
PMC–RB	→	PMC_RB. XXX
PMC 0.5M	→	PCD_0.5M.XXX
PMC 1.0M	→	PCD_10M.XXX
PMC 1.5M	→	PCD_15M.XXX
CEX1.0M	→	CEX_10M.XXX
CEX 2.0M	→	CEX_20M.XXX

XXX corresponds to the file extension of MS–DOS format files. A number from 000 to 031 is specified for XXX. For example, if the PMC–RA file in flash memory is saved to a memory card that does not yet contain any PMC–RA. * files, the saved file is named PMC–RA.000. If, however, that file is saved to a memory card that already contains a file named PMC–RA.000, the saved file is named PMC–RA.001. As files are added, the extension is incremented up to a maximum of PMC–RA.031. Any no–longer used numbers in the sequence of the extension numbers are used in as cending order. If two or more files having identical names but different extension numbers are normally saved to the memory card, check the file names displayed subsequently.

D.2.5 SRAM DATA BACKUP Screen

- **Description**

This screen is used to collectively save and restore parameters, programs, and other data, retained after the CNC power is turned off, to and from a memory card.

- **Screen configuration**

Select ”4 SRAM DATA BACKUP” on the SYSTEM MONITOR MAIN MENU screen. The following screen is displayed.

```
(1)  SRAM DATA BACKUP
(2)  [BOARD:MAIN]
(3)    1. SRAM BACKUP (CNC  → MEMORY CARD)
       2. RESTORE SRAM (MEMORY CARD  → CNC)
(4)    END

(5)    SRAM SIZE   :   0.5MB (BASIC)
(6)    FILE NAME   :   SRAM0_5A. FDB









(7)  *** MESSAGE ***
     SELECT MENU AND HIT SELECT KEY.
     [ SELECT ][  YES  ][  NO  ][  UP  ][  DOWN  ]
```

1 : Screen title
2 : Names of accessing board
3 : Menu
4 : Returning to the previous menu
5 : Size of SRAM mounted on the CNC
6 : File name
7 : Message

- **Operating procedure**

[Backing up data]

1 Select ”1. SRAM BACKUP.” The following confirmation message is displayed. Press **[YES]** to start backup.

```
*** MESSAGE ***
BACKUP SRAM DATA OK ? HIT YES OR NO.
```

2 The name of the file being written to the memory card is displayed in the FILE NAME: field.

```
SRAM SIZE  : 128K (BASIC)
FILE NAME  : SRAM128K. 000  → MEMORY CARD
                                  ↖ Name of the file being saved
*** MESSAGE ***
SRAM DATA WRITING TO MEMORY CARD.
```

3 Upon terminating normally, the system displays the following message. Press the **[SELECT]** soft key.

```
*** MESSAGE ***
SRAM BACKUP COMPLETE. HIT SELECT KEY.
```

[Restoring the data]

1 Select “2. RESTORE SRAM.” The system displays the following message. Press the **[YES]** key.

```
*** MESSAGE ***
RESTORE SRAM DATA OK ? HIT YES OR NO.
```

2 The system displays the following message during restoration.

```
*** MESSAGE ***
RESTORE SRAM DATA FROM MEMORY CARD.
```

3 Upon terminating normally, the system displays the following message. Press the **[SELECT]** soft key.

```
*** MESSAGE ***
RESTORE COMPLETE. HIT SELECT KEY.
```

- **Others**

1 Name of backup file

The name of the backup file written to the memory card by the SRAM backup function depends on the size of the SRAM installed in the CNC.

When the size of SRAM is 1MB or larger, backup files are created in units of 512 KB.

Number of files / SRAM size	1	2	3	4	5
256KB	SRAM256A.FDB				
1.5MB	SRAM0_5A.FDB				
1.0MB	SRAM1_0A.FDB	SRAM1_0B.FDB			
1.5MB	SRAM1_5A.FDB	SRAM1_5B.FDB	SRAM1_5C.FDB		
2.5MB	SRAM2_5A.FDB	SRAM2_5B.FDB	SRAM2_5C.FDB	SRAM2_5D.FDB	SRAM2_5E.FDB

2 When the OPT2, OPT3, or LCB board is installed in addition to the main board

The backup file for SRAM on the OPT2, OPT3, or LCB board will have the following extension:

Board	MAIN	OPT2	OPT3	LCB
Extension	FDB	OP2	OP3	LCB

D.2.6 MEMORY CARD FILE DELETE Screen

- **Description**

This screen is used to delete a file from a memory card.

- **Screen configuration**

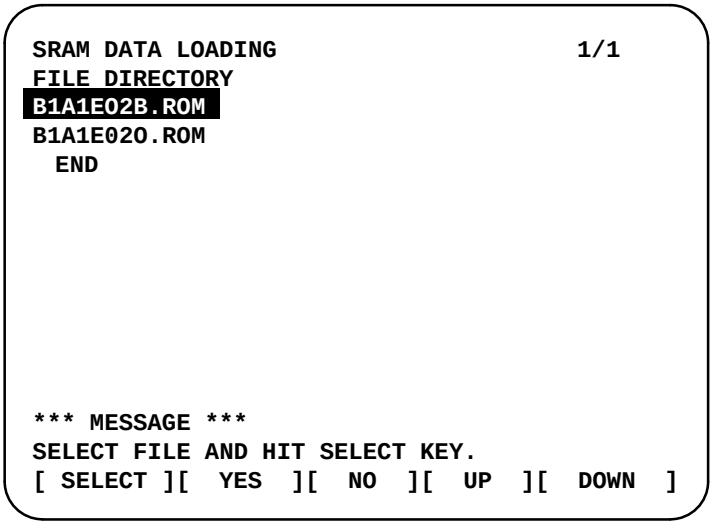

1 : Screen title. Tlhe current page number (n) and the total number of pages (m) are displayed, in n/m format, at the right end.

2 : Files on the memory card

3 : Option for returning to the previous menu

4 : Message

- **Operating procedure**

1 Press the **[SELECT]** key to select the name of the file to be deleted from the memory card.

2 The system displays the following confirmation message. Press the **[YES]** key.

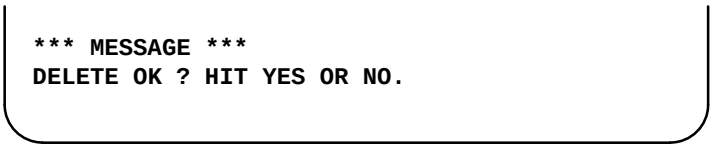

3 When deletion completes normally, the following message is displayed. Pless **[SELECT]**key.

- **Others**

1 When the memory card contains nine or more files

Display the desired page, following the procedure given in the description of the SYSTEM DATA LOADING screen.

D.2.7 MEMORY CARD FORMAT Function

- **Description**

This function is used to format a memory card. Memory cards must be formatted before they can be used for the first time or before they can be re–used after their data has been destroyed or lost because of, for example, battery failure.

- **Operating procedure**

1 From the SYSTEM MONITOR MAIN MENU screen, select ”7. MEMORY CARD FORMAT.”

2 The system displays the following confirmation message. Press the **[YES]** key.

```
*** MESSAGE ***
MEMORY CARD FORMAT OK ? HIT YES OR NO.
```

3 The system displays the following message during formatting :

```
*** MESSAGE ***
FORMATTING MEMORY CARD.
```

4 When a card has been formatted normally, the system display the
- following message.
- Press the **[SELECT]** key.

```
*** MESSAGE ***
FORMAT COMPLETE. HIT SELECT KEY.
```

D.2.8 LOAD BASIC SYSTEM Function

- **Description**

The function is used to terminate the boot system and activate the CNC.

- **Operating procedure**

From the MAIN MENU screen, select “9. END.” The system displays the “ARE YOU SURE? HIT YES OR NO” message. To terminate the boot system and activate the CNC, press the **[YES]** soft key. Pressing the **[NO]** key cancels this operation.

```
*** MESSAGE ***
ARE YOU SURE ? HIT YES OR NO.

[ SELECT ][  YES  ][  NO  ][  UP  ][  DOWN  ]
```

1 After pressing the **[YES]** soft key

The system checks the NC BASIC system file in the flash ROM. The system displays the following message :

```
*** MESSAGE ***
CHECK CNC BASIC SYSTEM.

[ SELECT ][  YES  ][  NO  ][  UP  ][  DOWN  ]
```

When the NC BASIC system file is found to be normal, the system sends the system file to DRAM and starts the NC basic system. During loading, the system blinks the following message.

```
*** MESSAGE ***
  LOADING BASIC TO DRAM

[ SELECT ][  YES  ][  NO  ][  UP  ][  DOWN  ]
```

If the contents of the NC BASIC SYSTEM file are found to have been damaged or destroyed, the system returns to the processing selection state, in exactly the same way as when the **[NO]** soft key is pressed.

2 If the **[NO]** soft key is pressed, the system returns to the processing selection state as shown below :

```
*** MESSAGE ***
SELECT MENU AND HIT [SELECT] KEY.

[ SELECT ][  YES  ][  NO  ][  UP  ][  DOWN  ]
```

D.3 ERROR MESSAGES AND REQUIRED ACTIONS

The following table lists and explains error messages in alphabetical order.

	Message	Description and required action
D	DELETE ERROR. HIT SELECT KEY.	An attempt to delete a file from flash memory was unsuccessful. Retry the deletion. If the second attempt also fails, the flash memory may have been damaged or destroyed. Replace the flash memory module.
	DEVICE ERROR (CNC x)	An attempt to write data to flash memory was unsuccessful. Retry the write operation. If the second attempt also fails, the flash memory may have been damaged or destroyed. Repalce the flash memory module.
	D–RAM OR S–RAM PARITY	Invalid data has been found in the RAM area. If the RAM was not cleared after being installed, subsequently attempting backup may stop the BOOT SYSTEM and cause this message to be output.
F	FILE SAVE ERROR. HIT SELECT KEY.	An attempt to write a file to a memory card was unsuccessful. Check that the memory card is not damaged. Note) Check that the memory card's battery is not exhusted, that its circuitry has not been damaged, and that it is securely inserted into its slot.
	FLASH MEMORY NO SPACE	There is insufficient free flash memory to store the selected file. Delete any unnecessary files from flash memory.
	FLASH ROM MODULE NOT EXIST. HIT SELECT.	The flash memory module is not mounted on that CNC system. Put the flash memory module on the board.
I	ILLEGAL FORMAT FILE	The selected file cannot be read into flash memory. The selected file or the header information for flash memory may have been damaged or destroyed.
L	LOADING ERROR. HIT SELECT KEY.	An error occurred while loading data into flash memory. Do not touch the memory card while loading data.

	Message	Description and required action
M	MAX EXTENSION OVER. HIT SELECT KEY.	The extension number added to a file name exceeds 031. Delete any unnecessary backup files from the memory card.
	MEMORY CARD BATTERY ALARM. HIT SELECT.	The memory card's battery is exhausted. Replace the battery.
	MEMORY CARD FULL. HIT SELECT KEY.	The memory card is full. Delete any unnecessary files from the memory card. Alternatively, replace the memory card with another card having sufficient free space.
	MEMORY CARD MOUNT ER-ROR. HIT SELECT KEY	The memory card could not be accessed. Check that the memory card is normal.
	MEMORY CARD NOT EXIST. HIT SELECT KEY.	The memory card is not inserted into its slot. Check that the memory card is pushed fully home.
	MEMORY CARD PROTEC-TED.HIT SELECT KEY.	Although writing to the memory card was selected, the write inhibit switch is set. Disable the write inhibit switch.
	MEMORY CARD TYPE IS NOT AVAILABLE.	Write has been attempted to an incompatible flash memory card. Use only the flash memory cards recommended by FANUC. Recom-mended flash memory cards are listed in the ordering list.
	MEMORY CARD WRITE ER-ROR. HIT SELECT KEY.	Access to the memory card has failed. Check whether the memory card is defective.
P	PLEASE FORMAT FLASH TYPE CARD.HIT SEL.	It is not possible to delete only specific files from a flash memory card, due to the characteristics of the memory used. To delete a file it is necessary to delete all files on the card, by using the FORMAT func-tion.
R	ROM PARITY ERROR: NC BASIC. HIT SELECT.	The NC BASIC is parity error. Check that mounted flash memory module contains NC BASIC file.
S	SRAM DATA BACKUP ERROR. HIT SELECT KEY.	An attempt to write a backup file to a memory card failed. Check that the memory card is normal.

E NOTATION OF MDI KEYS

Series 16/18/160/180–MODEL B have two types of MDI keypads : English type and Symbolic type.
The table below shows correspondence between English keys and Symbolic keys.
This manual uses English type in the text.
Therefore when a user uses Symbolic type MDI keypads and encounters an English key in the text, please refer to the correspondence table shown below.

Name	English key	Symbolic key
CANCEL key	CAN	
POSITION key	POS	
PROGRAM key	PROG	
OFFSET/ SETTING key	OFFSET SETTING	
CUSTOM key	CUSTOM	
SYSTEM key	SYSTEM	
MESSAGE key	MESSAGE	
GRAPH key	GRAPH	
CNC/MMC key	CNC / MMC	
SHIFT key	SHIFT	

Name	English key	Symbolic key
INPUT key	INPUT	
ALTER key	ALTER	
INSERT key	INSERT	
DELETE key	DELETE	
PAGE UP key	↑ PAGE	
PAGE DOWN key	PAGE ↓	
HELP key	HELP	
RESET key	RESET	
CUSTOM/GRAPH key	CUSTOM GRAPH	

≪Number≫

16–TB/MB, 160–TB/MB (MAIN–A SPEC.), 93

16–TB/MB, 160–TB/MB, 18–TB/MB, 180–TB/MB (MAIN–B SPEC.), 95

18–TB/MB, 97

≪A≫

Abnormal sound and vibration during rotation, 419

AC spindle (analog interface), 278

AC spindle (serial interface), 260

Action against noise, 120

Address, 213

Adjusting reference position, 256

Air filter cleaning and replacement method, 177

AL–01 (motor overheat), 412

AL–02 (excessive deviation of speed), 413

AL–06,07 (over speed), 414

AL–09 (unit overheat/6S to 26S only), 415

AL–11 (DC link excessive voltage), 417

AL–12(DC link excessive current), 418

Alarm 300 (Request for reference position return), 338

Alarm 301 to 305 (Absolute pulse coder is faulty), 339

Alarm 306 to 308 (Absolute pulse coder battery is low), 342

Alarm 350 (serial pulse coder is abnormal), 343

Alarm 351 (serial pulse coder is abnormal), 344

Alarm 400 (Overload), 345

Alarm 401 (*DRDY signal turned off), 347

Alarm 404 and 405 (*DRDY signal is on), 349

Alarm 410 (Excessive position error amount during stop), 350

Alarm 411 (Excessive position error during move), 351

Alarm 414 (Digital servo system is abnormal), 353

Alarm 416 (Disconnection alarm), 365

Alarm 417 (Digital servo system is abnormal), 366

Alarm 700 (Overheat at control side), 367

Alarm 704 (Spindle speed fluctuation detection alarm), 368

Alarm 749 (Serial spindle communication error), 369

Alarm 750 (Spindle serial link cannot be started), 372

Alarm 751,761 (Spindle alarm), 377

Alarm 85 to 87 (Reader/puncher interface alarm), 326

Alarm 90 (Reference position return is abnormal), 336

Alarm 900 (ROM parity error), 378

ALARM 910 TO 915 (SRAM parity), 381

Alarm 916 (DRAM parity error), 384

Alarm 920 to 923 (Watch dog or RAM parity), 386

Alarm 924 (Servo module mounting error), 390

Alarm 930 (CPU error), 391

Alarm 950 (PMC system alarm), 392

Alarm 951 (PMC–RC watch DOG alarm), 394

Alarm 970 (NMI alarm in PMC control module), 395

Alarm 971 (NMI alarm in SLC), 397

Alarm 972 (NMI alarm in other board), 398

Alarm 973 (NMI alarm by unknown cause), 399

Alarm display, 27

Alarm history screen, 27

Alarm list, 431

Analog signal interface, 119

Applicable models, 2

Associated parameters, 259

Automatic operation cannot be done, 312

Automatic setting of standard parameter, 277

≪B≫

Background graphic board, 159

Block diagram, 279

Boot slot configuration screen, 489

Boot system, 487

Built–in debug function, 214

≪C≫

Calculation of S analog voltage and associated parameters, 280

Cleaning heat exchanger, 178

Clearing alarm history, 27

Clearing CAP–II data (16–T), 208

Clearing CAP–II memory, 209

Combining serial spindle and analog spindle, 112

Configuration display of software, 23

Configuration of PCBs, 24

Confirmation of transistor module, 421

Confirming power supply, 266

Confirming the parameters required for data output, 186

Connection to α serial spindle amplifier, 113

Connection to analog spindle amplifier, 115

Connection to serial spindle amplifier, 114

Connections by type of detectors, 109

Contents displayed, 54

Control unit P.C.B., 162

Control unit rack, 161

Corrective action for failures, 296

Correspondence between operation mode and parameters on spindle tuning screen, 274

CRT/MDI unit, 166

CRT/MDI unit, 99

Cycle start LED signal has turned off, 321

≪D≫

Data sampling for storage type waveform diagnosis, 75

Deleting file name and files, 208
Deletion of external operator messages record, 28
Description of this manual, 1
Digital servo, 247
Display and operation of CRT/MDI, 1
Display method, 24, 51, 218, 269
Displaying diagnostic page, 54
Displaying servo tuning screen, 253
Dogless reference position setting, 258
Dump/restore of CAP–II data (16–T), 207

≪E≫

Environmental requirement, 120
Error messages and required actions, 504
Execution period of PMC, 217
External operator messages record., 28

≪F≫

For lathe, 262
Function keys and soft keys, 2
Fuse replacement in power supply unit, 176
Fuses, 428

≪G≫

General of hardware, 91
General of interface, 211
General of spindle control , 279
General of spindle control (serial* interface), 261
Graphic of wave diagnosis data, 73
Graphic screen, 20, 21

≪H≫

Handle operation cannot be done, 309
Hardware, 89
Hardware configuration, 426
Help function, 51
Help screen, 19
High–speed DI signal interface, 117
How to replace fan motor, 175
How to replace the batteries, 173
How to replace the color liquid crystal display, 180
How to replace the modules, 172

≪I≫

I/O Card (sink type output), 154
I/O card (source type output), 154
I/O cards with power supply (power c) (sink type output), 155
I/O cards with power supply (power c) (source type output), 157
I/O link, 103
I/O unit model A, 425
Initial setting servo parameters, 248
Input and output of data, 183
Input and output of each file, 197
Input/output of conversational data in a lump, 195
Input/output super cap data, 195
Inputting and outputting the operation history data, 44
Inputting cap data, 202
Inputting CNC parameters, 190
Inputting custom macro variable values, 193
Inputting part programs, 194
Inputting pitch error compensation amount, 192
Inputting PMC parameters, 192
Inputting tool compensation amount, 193
Inputting/outputting CAP–II data, 205
Inputting/outputting data, 186
Insertion, 172
Inter–machine connection, 99
Interface between NC and PMC, 210
Investigating the conditions under which failure occurred, 296

≪J≫

Jog operation cannot be done, 305

≪K≫

Kind of data in sub memory, 207

≪L≫

LED display and module configuration of PCB, 126
LED indication, 427
List of alarm codes, 432
List of alarms (PMC), 456
List of maintenance parts, 471
List of operations, 82
List of parameter, 289
List of serial interface spindle amplifier alarms, 401
List of signals by each mode, 237
List of the PCBs and units, 161
Load basic system function, 503
Loader control boad, 151

≪M≫

Main CPU board, 130
Maintenance of heat pipe type heat exchanger, 177
Maintenance parts, 472, 476
Manual pulse generator, 102
Memory card file delete screen, 501
Memory card format function, 502
Memory display (M.SRCH), 227
Message screen, 19
Method A of gear change for machining center, 262
Method B of gear change for machining center(PRM 3705#2=1), 262
Method of cleaning fan unit, 178
Method of cleaning heat exchanger fan, 179
Method of installation after cleaning, 179
Model 1S to 3S (Amp. Specification : A06B–6059–H00x), 284
Models 6S to 26S (Amp. specification: A06B–6059–H2xx), 285
Module configuration screen, 26
Modules, 164

≪N≫

NC state display, 68
No manual operation nor automatic operation can be executed, 301
No rotation or incorrect speed, 420
Notation of MDI keys, 506
Nothing is displayed on CRT, 323

≪O≫

Offset/setting screen, 13, 15
Operating monitor, 80
Operation, 207, 258
Operation history, 30
Option 1 board, 140
Option 2 board, 142
Option 3 board, 148
Output of CAP data, 197
Outputting CNC parameters, 187
Outputting custom macro variable values, 189
Outputting part program, 190
Outputting pitch error compensation amount, 188
Outputting PMC parameters, 188
Outputting tool compensation amount, 189
Outputting waveform diagnosis data (storage type), 77

≪P≫

Parameter setting, 30, 253
PMC screen, 218
PMCDGN screen, 223
PMCLAD screen, 219
PMCRAM screen, 231
POSITION screen, 3
Power cannot be turned on, 298
Power capacity, 120
Power supply, 266
Power supply unit, 126
Power unit, 162
Printed circuit board (A16B–2201–0440), 263
PROGRAM screen, 4, 6, 8, 9, 10, 11

≪R≫

Reader/puncher interface, 101
Reference position deviates, 335
Related manual, 2
Remote buffer interface, 115
Removing, 172
Removing a printed circuit board, 429
Replace the battery for memory back up, 173
Replacing batteries for separate absolute pulse coder, 174
Replacing the LCD baklight, 182
Replacing the LCD fuse, 181

≪S≫

Screen configuration and operating procedure, 490
Screen display, 27, 28, 31
Screen displayed immediately after power is turned on, 22
Series 16, 91
Servo interface, 105
Servo tuning screen, 253
Setting module screen, 23
Setting parameters, 69
Setting parameters (Digital AC spindle), 287
Setting parameters for input/output, 184
Setting standard parameters, 288
Setting the input signal or output signal to be recorded in the operation history, 35
Signal and symbol correspondence table, 239
Signal waveform at test points, 265
Slot status display, 22
Soft key transition triggered by the function key GRAPH, 20
Soft key transition triggered by the function key GRAPHIC, 21
Soft key transition triggered by the function key HELP, 19
Soft key transition triggered by the function key MESSAGE, 19
Soft key transition triggered by the function key OFFSET/SETTING, 15
Soft key transition triggered by the function key POS, 3
Soft key transition triggered by the function key PROG (When the soft key [BG–EDT] is pressed in all modes), 11

Soft key transition triggered by the function key PROG in the EDIT mode, 6

Soft key transition triggered by the function key PROG in the HNDL, JOG, or REF mode, 9

Soft key transition triggered by the function key PROG in the MDI mode, 8

Soft key transition triggered by the function key PROG in the MEM mode, 4

Soft key transition triggered by the function key PROG in the TJOG or THDL mode, 10

Soft key transition triggered by the function key SYSTEM, 16

Soft keys, 2

Software configuration screen, 26

Specification, 212

Specification of PMC, 212

Spindle alarms (analog interface)(S series AC spindle), 468

Spindle alarms (serial spindle), 463

Spindle monitor screen, 272

Spindle setting and turning screen, 269

Spindle setting screen, 269

Spindle tuning screen, 270

SRAM data backup screen, 498

Starting the boot system, 488

Structure, 90

System configuration, 426

System configuration screen, 24

System data check screen, 493

System data delete screen, 495

System data loading screen, 491

System data save screen, 496

System files and user files, 489

System reserve area of internal relay, 214

System screen, 16

≪T≫

Table of test points, 263, 284

Test point signal wave form, 286

Test points, 266

Total connection diagram, 92

Trouble shooting (analog interface spindle), 411

Trouble shooting (serial interface spindle), 400

Troubleshooting, 294

Troubleshooting for each alarm, 404

Tuning after replacing PCB (S series AC spindle), 292

Tuning S analog voltage (D/A converter), 282

≪W≫

Warning screen displayed when an option is changed, 86

Warning screen displayed when system software is replaced (System label check error), 88

Wave form diagnostic function, 69

Waveform diagnostic parameter screen, 70

Revision Record

FANUC Series 16/18/160/180–MODEL B MAINTENANCE MANUAL (B–62445E)

Edition	Date	Contents	Edition	Date	Contents
03	Jan., ’95	• Additions and modifications of following descriptions. 1.4.4 Display of Special Alarm 1.5 EXTERNAL OPERATOR MESSAGES RECORD 1.6 OPERATION HISTORY 1.10 WAVE FORM DIAGNOSTIC FUNCTION B.1 LIST OF ALARM CODES D BOOT SYSTEM			
02	Nov., ’94	• Addition of descriptions for Series 160–MODEL B, Series 18–MODEL B, Series 180–MODEL B			
01	Apr., ’94				